07-DESIGN-046

Technology Readiness Assessment for the Waste Treatment and Immobilization Plant (WTP) HLW Waste Vitrification Facility

L. Holton
D. Alexander
C. Babel
H. Sutter
J. Young

August 2007

Prepared by the
U.S. Department of Energy
Office of River Protection
Richland, Washington, 99352

07-DESIGN-046

Technology Readiness Assessment for the Waste Treatment and Immobilization Plant (WTP) HLW Waste Vitrification Facility

L. Holton
D. Alexander
C. Babel
H. Sutter
J. Young

August 2007

Prepared by the
U.S. Department of Energy
Office of River Protection
under Contract DE-AC05-76RL01830

Summary

The U.S. Department of Energy (DOE), Office of River Protection (ORP) and the DOE Office of Environmental and Radioactive Waste Management (EM), Office of Project Recovery have completed a Technology Readiness Assessment (TRA) for the Hanford Waste Treatment and Immobilization Plant (WTP) High-Level Waste Vitrification Facility (HLW). The purpose of this assessment was to determine if the maturity of critical technology elements (CTE) is sufficient to be incorporated into the final design of this facility.

The methodology used for this TRA was based upon the detailed guidance for conducting TRAs contained in the Department of Defense (DoD), *Technology Readiness Assessment Deskbook*[1]. The assessment utilized a slightly modified version of the Technology Readiness Level (TRL) Calculator[2] originally developed by Nolte et al. (2003) to determine the TRL for the CTE.

The TRA consists of three parts:

1. Identifying the CTEs

2. Assessing the TRLs of each CTE using the technical readiness scale used by the DoD and National Aeronautics and Space Administration (NASA), and adapted by the Assessment Team for use by DOE (Table S-1)

3. Evaluating, if required, technology testing or engineering work necessary to bring any immature technologies to appropriate maturity levels.

CTEs are those technologies that are essential to successful operation of the facility and are new or are being applied in new or novel ways or environments. The CTE identification process was based upon the definition of WTP systems and the evaluation of 30 systems from the HLW Vitrification Facility. Four of these were identified at CTEs as described below. An identification of systems evaluated and CTEs is presented in Appendix B.

- HLW Melter Feed Process System (HFP) used to prepare the HLW melter feed
- HLW Melter System (HMP), which includes the HLW melter
- HLW Melter Offgas Treatment Process System/Process Vessel Vent Exhaust System (HOP/PVV) used to treat the HLW melter offgas
- Pulse Jet Mixer (PJM) system and Radioactive Liquid Waste Disposal System (RLD), including the submerged bed scrubber (SBS) condensate vessels in the HOP used to store and blend secondary liquid wastes.

The TRL of each CTE was evaluated against a scale developed for this assessment, termed the DOE-EM scale. This is shown in Table 1-1. This scale was developed to support assessment of radioactive waste treatment technologies and is consistent with the scales originally developed by NASA and the DoD. A comparison of the three TRL scales is contained in Appendix A.

---

[1] DoD 2005, *Technology Readiness Assessment (TRA) Deskbook*, Department of Defense, prepared by the Deputy Undersecretary of Defense for Science and Technology, May 2005

[2] Nolte, William L., et al., *Technology Readiness Level Calculator*, Air Force Research Laboratory, presented at the National Defense Industrial Association Systems Engineering Conference, October 20, 2003

The DoD and NASA normally require a TRL 6 for incorporation of a technology into the design process. This is done based upon the recommendations of an influential report[3] by the U.S. General Accounting Office (GAO) that examined the differences in technology transition between the DoD and private industry. It concluded that the DoD takes greater risks and attempts to transition emerging technologies at lesser degrees of maturity than private industry. The GAO also concluded that use of immature technology increased overall program risk and recommended that the DoD adopt the use of NASA's TRLs as a means of assessing technology maturity prior to transition into final design. Based upon the precedence set by DoD, this assessment used TRL 6 as the basis for determining that a technology is sufficiently mature for incorporation into the final design.

A TRL Calculator was used to provide a structured and consistent assessment to determine the TRL of each CTE identified. The TRL Calculator is a standard set of questions addressing hardware, software, program, and manufacturability. The TRL Calculator is implemented in Microsoft Excel™ and produces a graphical display of the TRL achieved. It was adapted for this assessment by adding and modifying existing questions to make it more applicable to DOE waste treatment equipment and processes. The TRL Calculator is described in Appendix B. Specific responses to each of the TRL questions for the CTEs evaluated in this assessment are presented in Appendix C. The CTEs were not evaluated to determine if they had matured beyond TRL 6. The results of this TRL determination are presented in Table S-1.

The Assessment Team has concluded that the technology status of the HLW Vitrification Facility technologies is sufficiently mature to continue to advance the final design of these facilities. Based upon the results of this assessment, the following recommendations for specific technologies are made:

1. Testing of a prototypical HLW film cooler and film cooler cleaner should be completed to demonstrate the adequacy of the equipment concepts prior to cold commissioning.

   Note: This testing is part of the planned work to resolve the External Flowsheet Review Team (EFRT) issue M-17, "HLW Film Cooler Plugging," dealing with film cooler blockages.

   The use of a film cooler in non-bubbled HLW melters is demonstrated in operations at the West Valley Demonstration Project (WVDP) and the Savannah River Defense Waste Processing Facility. The process conditions that increase film cooler blockages in bubbled melters such as the WTP HLW melter have been evaluated (CCN:144619) but are not completely understood. Consistent delivery of a high-solid feed from ultrafiltration to HLW vitrification, and limiting the melter bubbler air rates are factors that can mitigate film cooler blockage. While testing has shown it is possible to maintain HLW vitrification melt rates with lower concentration feeds, this mode of operation could increase plugging in the film cooler. There may be cold cap conditions and bubbler locations where film cooler plugging is more prevalent, as well as high-bubbling conditions. Understanding these conditions would be useful for optimization of melter design and production rates.

   Because the DM1200 was operated for a limited period of time (approximately 20 days) with the final design configuration, it is not known whether the cited limitations on bubbler rates will prevent excessive film cooler blockages. The film coolers appear to be adequate for a melter capacity of 3 MTG/day without modification. If capacities greater than 3 MTG/day are required, design changes to the melter may be warranted.

[3] GAO/NSIAD-99-162, *Best Practices: Better Management of Technologies can Improve Weapon System Outcomes*, U.S. Government Accountability Office, July 1999

Table S.1. Technology Readiness Level Summary for HLW Vitrification Critical Technology Elements

Critical Technology Element/Description	Technology Readiness Level	Rationale
HLW Melter Feed Process System (HFP) The HFP mixes HLW waste and glass formers to provide feed for the HLW melters.	**6**	There has been extensive WTP and vendor testing to demonstrate the adequacy of the mixing systems.
HLW Melter Process System (HMP) The HMP vitrifies the waste feed slurry produced in the HFP.	**6**	The HLW melter has a significant development basis in previous DOE projects and developmental tests for the WTP. Testing of four reference HLW feeds was determined adequate to support initial operations of the WTP. However, extensive evaluation of alternative anticipated HLW glass compositions has not been completed.
HLW Melter Offgas Treatment Process System/Process Vessel Vent Exhaust System (HOP/PVV) The HOP removes hazardous particulates, aerosols, and gases from the HLW melter offgas and vessel ventilation process offgas. The PVV provides a pathway for vessel offgas to the HOP for treatment.	**5**	The HOP/PVV designs have a significant development basis in the WVDP and testing with the DM1200 melter and offgas system. However, the HOP/PVV was determined to be a TRL 5 because risks remain with the HLW melter film coolers, SBS, carbon columns, and the WESP design, the later of which must achieve the lifetime of 40 years.
Pulse Jet Mixer (PJM) System/Radioactive Liquid Waste Disposal System(RLD)/HOP The PJM system mixes waste streams comprised of liquid and solids, blends liquids and solids, and suspends solids for sampling and transport. The RLD receives effluents from contaminated waste treatment processes areas in the HLW Facility, equipment flushes, and facility sumps and flushes. HOP SBS Condensate Vessels - includes all vessels in the HLW Facility that are mixed with PJMs.	**4**	Extensive testing of PJMs to demonstrate adequate mixing of slurries with non-Newtonian rheology characteristics has been completed. The WTP Contractor has recently identified requirement to test PJMs for use in vessels containing slurries with Newtonian rheology characteristics to demonstrate adequacy of design to mix, suspend, and re-suspend solids. No clear requirements exist for PJM mixing requirements. Thus, the PJMs were determined to be TRL 4. See 07-DESIGN-047 for further discussion.

The solutions planned for film cooler blockages (limit bubbling rate, film cooler cleaner, replaceable film cooler) do not include evaluation of design options that might prevent film cooler blockages from forming. For example, there might be design solutions such as splash plates within the plenum below the film cooler, redesign of the melter lid for a more optimum bubbler layout with an increased number of bubblers, or a taller melter plenum that would be more effective in de-entrainment of particulates.

2. Testing and analysis to demonstrate the adequacy of the Wet Electrostatic Precipitator (WESP) design is recommended.

   Further testing of the WESP is recommended to address operational modes. The Vitreous State Laboratory of the Catholic University of America tests indicated difficulties restoring power to the WESP electrodes may be related to the melter feed composition (24590-101-TSA-W000-0009-174-00001). In some cases, the WESP electrodes could not be brought back up to full voltage after

significant operation with low-activity waste (LAW) feeds. While no problems were observed with HLW simulants during DM1200 tests, operational information should be confirmed for the HLW feed to understand if feed properties caused the problems.

Further evaluation is also recommended to prove the viability of 6% molybdenum (Mo) stainless steels for WESP internals and vessels in the WTP offgas environment. Selection of a corrosion resistant alloy for WESP vessels and internals is of critical importance, because the WESP vessel is not accessible for maintenance (except for the electrode connectors) or removable for the 40-year life of the HLW Vitrification Facility. The WESP vessel and internals are constructed of 6% Mo stainless steel (24590-HLW-N1D-HOP-00002). The article by Phull (2000) was the basis for the selection of the 6% Mo for the WTP in the WESP corrosion evaluation (24590-HLW-N1D-HOP-00002. Phull showed that even 6% Mo stainless steels exhibited very slight susceptibility to corrosion attack after 656 days of exposure to flue gases. Data from Phull implies that a 6% Mo alloy or greater stainless steel is needed in corrosive environments where long life is mandatory.

3. Activated carbon vendor testing should be completed to confirm the behavior of organics, acids (nitrogen oxide [NO_x], sulfur dioxide [SO_2], and halogen), sulfur, and mercury within the carbon bed.

   Note: Testing on the carbon bed material is scheduled to be completed as part of the WTP baseline within the next 12 months. Any problems identified by vendor testing of the activated carbon bed material may potentially impact the WTP design and the WTP environmental performance test plan (CCN:128559).

4. Testing of the ability of pulse jet mixer (PJM) technology for dissipating gases, blending liquids, and suspending solids should be completed as planned, and a determination made on the adequacy of the PJM designs for the HOP and PLD vessels. Specific requirements for PJM mixing should be established (see 07-DESIGN-047).

   Note: This testing is part of the WTP baseline as part of resolution of the EFRT issue M3, "Inadequate Mixing System."

WTP software and control systems were not included in this TRA because of the limited development on these systems.

This assessment is the second of several TRAs planned for the WTP. An initial TRA was completed on the WTP Analytical Laboratory, Balance of Facilities, and LAW Waste Vitrification Facility (07-DESIGN-042). A third assessment has been completed for the Pretreatment Facility (07-DESIGN-47).

Contents

1.0 Introduction 1-1
1.1 Background 1-1
1.2 Assessment Objectives 1-1
1.3 Description of TRA process 1-1
1.3.1 Background 1-1
1.3.2 TRA Process 1-2
2.0 Technology Readiness Level Assessment 2-1
2.1 TRL Process description 2-1
2.2 Determination of CTEs 2-1
2.3 Summary of the Technology Readiness Assessment 2-2
2.3.1 HLW Melter Feed Process System (HFP) 2-2
2.3.2 HLW Melter Process System (HMP) 2-6
2.3.3 HLW Melter Offgas Treatment Process System and Process Vessel Vent Exhaust System (HOP/PVV) 2-13
2.3.4 Pulse Jet Mixer (PJM) System, HLW Melter Offgas Treatment Process System (HOP), and Radioactive Liquid Waste Disposal System (RLD) 2-22
3.0 Findings, Recommendations and Observations 3-1
3.1 Findings 3-1
3.2 Conclusions and Recommendations 3-1
4.0 References 4-1
Appendix A – Determination of Critical Technology Elements A-1
Appendix B – Technology Readiness Level Calculator as Modified for DOE Office of Environmental Management B-1
Appendix C – Technology Readiness Level Summary for WTP Critical Technology Elements for HLW Vitrification C-1
Appendix D – Participants in the TRL Assessment D-1

Figures

Figure 2.1. Flow Diagram of the HLW Melter Feed Process System (HFP) 2-3
Figure 2.2. Schematic of HLW Melter Section View through Discharge Riser along North-South Axis 2-8
Figure 2.3. Block Flow Diagram for the HOP/PVV 2-14
Figure 2.4. Simplified Flow Diagram Showing the HOP and RLD Vessels and their relationship to Interfacing Vessel System 2-24

Tables

Table 1.1. Technology Readiness Levels used in this Assessment 1-3
Table 1.2. Relationship of Testing Requirements to the TRL 1-4
Table 2.1. Questions used to Determine the Critical Technology Element for the HLW Vitrification Facility Technology Readiness Level Assessment 2-2
Table 3.1. Technology Readiness Level Summary for the HLW Critical Elements 3-3

Acronyms and Abbreviations

AC	activated carbon
ADS	air displacement slurry
AEA	Atomic Energy Agency
AFRL	U.S. Air Force Research Laboratory
APEL	Advanced Product Evaluation Laboratory
ASX	Autosampling System
BNFL	British Nuclear Fuels Limited
BNI	Bechtel National, Inc.
BOF	Balance of Facilities
CTE	Critical Technology Element
DF	decontamination factor
DoD	U.S. Department of Defense
DOE	U.S. Department of Energy
DRE	destruction removal efficiency
DWPF	Savannah River Defense Waste Processing Facility
EFRT	External Flowsheet Review Team
EM	Office of Environmental Management
GAO	U.S. Government Accountability Office
GFR	Glass Formers Reagent System
HCP	HLW Concentrate Receipt Process System
HDH	HLW Canister Decontamination Handling System
HEH	HLW Canister Export Handling System
HEME	high-efficiency mist eliminator
HEPA	high-efficiency particulate air
HFP	HLW Melter Feed Process System
HLP	HLW Lag Storage and Feed Blending Process System
HLW	High-Level Waste [Vitrification Facility]
HMP	HLW Melter Process System
HOP	HLW Melter Offgas Treatment Process System
HPH	HLW Canister Pour Handling System
HRH	HLW System Canister Receipt Handling
IHLW	immobilized high-level waste
LAB	Analytical Laboratory
LAW	Low-Activity Waste [Vitrification Facility]
M&S	modeling and simulation
MACT	maximum achievable control technology
MFPV	melter feed preparation vessel
MFV	melter feed vessel
Mo	molybdenum
NASA	National Aeronautics and Space Administration
NLD	Nonradioactive Liquid Waste Disposal System
ORP	Office of River Protection
P&ID	piping and instrumentation diagram
PBS	packed-bed caustic scrubber
PCJ	Process Control System
PJM	pulse jet mixer
PJV	Pulse Jet Ventilation System
PODC	principal organic dangerous constituent

PT	Pretreatment [Facility]
PVV	Process Vessel Vent Exhaust System
PWD	Plant Wash and Disposal System
QARD	Quality Assurance Requirements Document
R&D	research and development
R&T	Research and Technology
RAMI	Reliability, Availability, Maintainability Index
RFD	reverse flow diverter
RLD	System and Radioactive Liquid Waste Disposal System
SBS	submerged bed scrubber
SCR	selective catalytic reducer
SRTC	Savannah River Technical Center
TCO	thermal catalytic oxidizer
TMP	Technology Maturation Plan
TRA	Technology Readiness Assessment
TRL	Technology Readiness Level
VOC	volatile organic compounds
VSL	Vitreous State Laboratory of the Catholic University of America
WESP	Wet Electrostatic Precipitator
WGI	Washington Group International
WTP	Waste Treatment and Immobilization Plant
WVDP	West Valley Demonstration Project

Units of Measure

ft	foot
ft^2	square foot
gpm	gallons per minute
m^2	square meter
m^3	cubic meter
mg/L	milligrams per liter
mg/min	milligrams per minute
MT	metric ton
scfm	standard cubic feet per minute
wt%	weight percentage

Glossary

Critical Technology Element	A technology element is "critical" if the system being acquired depends on the technology element to meet operational requirements (with acceptable development, cost, and schedule and with acceptable production and operations costs) and if the technology element or its application is either new or novel. Said another way, an element that is new or novel or being used in a new or novel way is critical if it is necessary to achieve the successful development of a system, its acquisition, or its operational utility.
Engineering Scale	A system that is greater than 1/10 of the size of the final application but it is still less than the scale of the final application.
Full Scale	The scale for technology testing or demonstration that matches the scale of the final application.
Identical System	Configuration that matches the final application in all respects.
Laboratory Scale	A system that is a small laboratory model (less than 1/10 of the size of the full-size system
Model	A functional form of a system, generally reduced in scale, near or at operational specification.
Operational Environment (Limited Range)	A real environment that simulates some of the operational requirements and specifications required of the final system (e.g., limited range of actual waste).
Operational Environment (Full Range)	Environment that simulates the operational requirements and specifications required of the final system (e.g., full range of actual waste)
Paper System	System that exists on paper (no hardware).
Pieces System	System that matches a piece or pieces of the final application.
Pilot Scale	The size of a system between the small laboratory model size (bench scale) and a full-size system.
Prototype	A physical or virtual model that represents the final application in almost all respects that is used to evaluate the technical or manufacturing feasibility or utility of a particular technology or process, concept, end item, or system.
Relevant Environment	Testing environment that simulates the key aspects of the operational environment; e.g., range of simulants plus limited range of actual waste.
Similar System	Configuration that matches the final application in almost all respects.
Simulated Operational Environment	Environment that uses a range of waste simulants for testing of a virtual prototype.

1.0 Introduction

1.1 Background

The U.S Department of Energy (DOE), Office of River Protection (ORP) is constructing a Waste Treatment and Immobilization Plant (WTP) for the treatment and vitrification of the underground tank wastes stored at the Hanford Site in Washington State. The WTP is comprised of four major facilities: a Pretreatment (PT) Facility to separate the tank waste into high-level waste (HLW) and low-activity waste (LAW) process streams, a HLW Vitrification Facility to immobilize the HLW fraction, a LAW Vitrification Facility to immobilize the LAW fraction, and an Analytical Laboratory (LAB) to support the operations of all four treatment facilities. Additionally, there are the Balance of Facilities (BOF) operations that provide utilities and other support to the processing facilities. The WTP Project is DOE's largest capital construction project with an estimated cost of $12.263 billion, and a project completion date of November 2019 (DOE 2006).

Issues associated with the maturity of technology in the WTP have been evaluated by independent DOE Review Teams and in DOE's design oversight process. The most notable evaluation was the recently completed "Comprehensive External Review of the Hanford Waste Treatment Plant Flowsheet and Throughput" (CCN:132846) completed in March 2006. This evaluation identified 28 separate technical issues, some of which had not been previously identified by the WTP Contractor or DOE. A number of these issues originated from limited understanding of the technologies that comprise the WTP flowsheet.

As a result of these reviews, and DOE's desire to more effectively manage the technology risks associated with the WTP, the DOE has decided to conduct a Technology Readiness Assessment (TRA) to assess the technical maturity of the WTP design. This TRA is patterned after guidance established by the U.S. Department of Defense (DoD) (DoD 2005) for conducting TRAs.

1.2 Assessment Objectives

The purpose of this TRA is to evaluate the technologies used in the HLW Vitrification Facility. This TRA is intended to:

- Identify critical technology elements (CTE)
- Determine the TRL associated with the CTEs
- Provide recommendations on how to improve the maturity level of technologies that require additional development.

This TRA was performed jointly by ORP and the DOE Office of Environmental Management (EM), Office of Project Recovery, and builds on the initial TRA conducted in January 2007 (07-DESIGN-042), which evaluated the WTP LAB, BOF, and LAW facilities.

1.3 Description of TRA Process

1.3.1 Background

> "A TRA is a systematic, metric-based process and accompanying report that assesses the maturity of certain technologies [called Critical Technology Elements (CTEs)] used in systems." (DoD 2005)

In 1999, the U.S. General Accounting Office (GAO) produced an influential report (GAO/NSIAD-99-162) that examined the differences in technology transition between the DoD and private industry. The GAO concluded that the DoD took greater risks, and attempted to transition emerging technologies at lesser degrees of maturity compared to private industry, and that the use of immature technology increased overall program risk and led to substantial cost and schedule overruns. The GAO recommended that the DoD adopt the use of the National Aeronautics and Space Administration's (NASA) Technology Readiness Levels (TRL) as a means of assessing technology maturity prior to design transition.

In 2001, the Deputy Undersecretary of Defense for Science and Technology issued a memorandum that endorsed use of TRLs in new major programs. Guidance for assessing technology maturity was incorporated into the *Defense Acquisition Guidebook* (DODI 5000.2). Subsequently, the DoD developed detailed guidance for using TRLs in the 2003 *Department of Defense, Technology Readiness Assessment Deskbook* (updated in May 2005 [DOD 2005]). The DoD Milestone Decision Authority must certify to Congress that the technology has been demonstrated in a relevant environment prior to transition of weapons system technologies to design or justify any waivers. TRL 6 is also used as the level required for technology insertion into design by NASA.

Based upon historical use of the TRA process, the DOE has decided to use the DoD TRA process as a method for assessing technology readiness for the WTP[1].

1.3.2 TRA Process

The TRA process as defined by the DoD consists of three parts: (1) identifying the CTEs; (2) assessing the TRLs of each CTE using an established readiness scale; and (3) preparing the TRA report. As some of the CTEs were judged to be below the desired level of readiness, the TRL assessment was followed by a Technology Maturation Plan (TMP) analysis and report that determines the additional development required to attain the desired level of readiness (see Volume I). Requirements for the TMP analysis are described in the DoD *Technology Readiness Assessment Deskbook* (May 2005) and is usually carried out by a group of experts that are independent of the project under consideration.

The CTE identification process involves breaking the project under evaluation into its component systems and subsystems, and determining which of these are essential to project success and either represent new technologies, combinations of existing technologies in new or novel ways, or will be used in a new environment. Appendix A describes the identification of the CTE process in greater detail.

The TRL scale used in this assessment is shown in Table 1.1. This scale requires that testing of a prototypical design in a relevant environment be completed prior to incorporation of the technology into the final design of the facility.

[1] Appendix A of 07-DESIGN-042, *Technology Readiness Assessment for the Waste Treatment and Immobilization Plant (WTP), Analytical Laboratory, Balance of Facilities and LAW Waste Vitrification Facilities*, March 2007, U.S Department of Energy, provides a detailed description of the NASA and DoD TRL definitions and compares those with the TRL definitions used in the WTP assessments.

Table 1.1. Technology Readiness Levels used in this Assessment

Relative Level of Technology Development	Technology Readiness Level	TRL Definition	Description
System Operations	**TRL 9**	Actual system operated over the full range of expected conditions.	Actual operation of the technology in its final form, under the full range of operating conditions. Examples include using the actual system with the full range of wastes.
System Commissioning	**TRL 8**	Actual system completed and qualified through test and demonstration.	Technology has been proven to work in its final form and under expected conditions. In almost all cases, this TRL represents the end of true system development. Examples include developmental testing and evaluation of the system with real waste in hot commissioning.
	TRL 7	Full scale, similar (prototypical) system demonstrated in a relevant environment.	Prototype full-scale system. Represents a major step up from TRL 6, requiring demonstration of an actual system prototype in a relevant environment. Examples include testing the prototype in the field with a range of simulants and/or real waste and cold commissioning.
Technology Demonstration	**TRL 6**	Engineering/pilot scale, similar (prototypical) system validation in a relevant environment.	Representative engineering scale model or prototype system, which is well beyond the lab scale tested for TRL 5, is tested in a relevant environment. Represents a major step up in a technology's demonstrated readiness. Examples include testing a prototype with real waste and a range of simulants.
Technology Development	**TRL 5**	Laboratory scale, similar system validation in relevant environment.	The basic technological components are integrated so that the system configuration is similar to (matches) the final application in almost all respects. Examples include testing a high-fidelity system in a simulated environment and/or with a range of real waste and simulants.
	TRL 4	Component and/or system validation in laboratory environment.	Basic technological components are integrated to establish that the pieces will work together. This is relatively "low fidelity" compared with the eventual system. Examples include integration of “ad hoc” hardware in a laboratory and testing with a range of simulants.
Research to Prove Feasibility	**TRL 3**	Analytical and experimental critical function and/or characteristic proof of concept.	Active research and development is initiated. This includes analytical studies and laboratory scale studies to physically validate the analytical predictions of separate elements of the technology. Examples include components that are not yet integrated or representative. Components may be tested with simulants.
Basic Technology Research	**TRL 2**	Technology concept and/or application formulated.	Invention begins. Once basic principles are observed, practical applications can be invented. Applications are speculative, and there may be no proof or detailed analysis to support the assumptions. Examples are still limited to analytic studies.
	TRL 1	Basic principles observed and reported.	Lowest level of technology readiness. Scientific research begins to be translated into applied research and development (R&D). Example might include paper studies of a technology's basic properties.

The testing requirements used in this assessment are compared to the TRLs in Table 1.2.
These definitions provide a convenient means to further understand the relationship between the scale of testing, fidelity of testing system and testing environment, and the TRL. This scale requires that for a TRL 6 testing must be completed at an engineering or pilot scale, with a testing system fidelity that is similar to the actual application and with a range of simulated wastes and/or limited range of actual waste, if applicable.

The assessment of the TRLs was aided by a TRL Calculator that was originally developed by the United States Air Force (USAF) (Nolte et. al. 2003), and modified by the Assessment Team. This tool is a standard set of questions addressing hardware, software, program, and manufacturability questions that is implemented in Microsoft Excel™. The TRL Calculator produces a graphical display of the TRLs achieved. The TRL Calculator used in this assessment is described in more detail in Appendix B.

Table 1.2. Relationship of Testing Requirements to the TRL

TRL	Scale of Testing[1]	Fidelity[2]	Environment[3]
9	Full	Identical	Operational (Full Range)
8	Full	Identical	Operational (Limited Range)
7	Full	Similar	Relevant
6	Engineering/Pilot	Similar	Relevant
5	Lab	Similar	Relevant
4	Lab	Pieces	Simulated
3	Lab	Pieces	Simulated
2		Paper	
1		Paper	

1. Full Scale = Full plant scale that matches final application
   1/10 Full Scale < Engineering/Pilot Scale < Full Scale (Typical)
   Lab Scale < 1/10 Full Scale (Typical)
2. Identical System – configuration matches the final application in all respects
   Similar System – configuration matches the final application in almost all respects
   Pieces System – matches a piece or pieces of the final application
   Paper System – exists on paper (no hardware)
3. Operational (Full Range) – full range of actual waste
   Operational (Limited Range) – limited range of actual waste
   Relevant – range of simulants + limited range of actual waste
   Simulated – range of simulants

2.0 Technology Readiness Level Assessment

2.1 TRL Process Description

An Assessment Team comprised of staff from the DOE ORP, technical consultants to ORP, and DOE EM's Office of Project Recovery completed the TRL assessment with support from the WTP engineering staff (see Appendix D for the identification of the Assessment Team and supporting contractor staff from the WTP). Assessment Team staff have worked on the Hanford WTP project and related nuclear waste treatment and immobilization technologies for more than 30 years, and are independent of the WTP design and construction project.

WTP engineering staff (e.g., WTP Project Team) presented descriptions of the WTP systems that were assessed, participated in the identification of the CTEs, and participated in the completion of responses to individual questions in the TRL Calculator. Each response to a specific Calculator question was recorded along with references to the appropriate WTP Project documents. The Assessment Team also completed independent due-diligence reviews and evaluation of the testing and design information to validate input obtained in the Assessment Team and WTP Project Team working sessions. The Calculator results for each CTE can be found in Appendix C.

This Assessment Team evaluated the process and mechanical systems that are used to treat and immobilize the HLW radioactive waste and prepare the immobilized high-level waste (IHLW) product for disposal. It did not evaluate the software systems used to control the process and mechanical equipment because these software systems have not been sufficiently developed and are not critical to the mechanical design of the facilities. The assessment of the technology readiness of the software systems will be completed at a later date.

2.2 Determination of CTEs

The process for identification of the CTEs for the HLW Vitrification Facility involved two steps:

1. An initial screening by the Assessment Team of the complete list of systems in the HLW Facility for those that have a potential to be a CTE. In this assessment, systems that are directly involved in the processing of the tank waste or handling of the primary products (IHLW and secondary wastes) were initially identified as potential CTEs. The complete list of systems and those identified as potential CTEs are provided in Appendix B.

2. A final screening of the potential CTEs was completed by the Assessment and WTP Project Teams to determine the final set of CTEs for evaluation. The potential CTEs were evaluated against the two sets of questions presented in Table 2.1. A system is determined to be a CTE if a positive response is provided to at least one of the questions in each of the two sets of questions.

The specific responses to each of the questions for each CTE are provided in Table A.3 of Appendix A. In this final assessment, the following systems were identified as CTEs:

- HLW Melter Feed Process System (HFP)
- HLW Melter Process System (HMP)
- HLW Melter Offgas Treatment Process System and Process Vessel Vent Exhaust System (HOP/PVV)
- Pulse Jet Mixer (PJM) system and Radioactive Liquid Waste Disposal System (RLD)

Table 2.1. Questions used to Determine the Critical Technology Element for the HLW Vitrification Facility Technology Readiness Level Assessment

First Set	1. Does the technology directly impact a functional requirement of the process or facility? 2. Do limitations in the understanding of the technology result in a potential schedule risk; i.e., the technology may not be ready for insertion when required? 3. Do limitations in the understanding of the technology result in a potential cost risk; i.e., the technology may cause significant cost overruns? 4. Are there uncertainties in the definition of the end state requirements for this technology?
Second Set	1. Is the technology (system) new or novel? 2. Is the technology (system) modified? 3. Has the technology been repackaged so that a new relevant environment is realized? 4. Is the technology expected to operate in an environment and/or achieve a performance beyond its original design intention or demonstrated capability?

2.3 Summary of the Technology Readiness Assessment

This section summarizes the results of the TRL assessment completed for each of the CTEs.

The TRL Calculator (Appendix B) employs a two-step process to evaluate TRLs.

1. A top-level set of questions was evaluated to determine the starting point, in terms of readiness level, for the TRL assessment. This evaluation showed that the identified CTEs all had achieved a TRL 5 status.
2. A more detailed assessment was completed using a series of detailed questions starting at TRL 4. This assessment indicated that all CTEs achieved a TRL 4. Next, the assessment evaluated the TRL 5 questions in detail and recorded responses. Finally, the assessment evaluated the TRL 6 questions in detail and recorded responses. The responses to the TRL questions are provided in Appendix C for each CTE.

For each CTE, the discussions below describe the CTE function, description, the relationship to other CTEs, the development history and status, the relevant environment, a comparison of the demonstrated and relevant environments, and the rationale for the TRL determination and any recommendations.

2.3.1 HLW Melter Feed Process System (HFP)

2.3.1.1 Function of the HFP

The function of the HFP is to prepare blended waste feed for the HLW melter by combining HLW concentrate from the PT Facility and glass formers from the Glass Formers Reagent System (GFR).

2.3.1.2 Description of the HFP

The sub-functions of the HFP are described in the HLW Concentrate Receipt Process System (HCP) and HFP systems description (24590-HLW-3YD-HFP-00001), and include:

- Receive HLW concentrate from the PT Facility, glass formers from the GFR and additives such as antifoaming agents that assist the blending and feed process.
- Store the received feed materials.

- Uniformly mix the HLW concentrate, glass formers, and additives. Mixing also suspends the solids for transfer and prevents the buildup of hydrogen gas.
- Remove heat generated by radioactive decay and mixing.
- Transfer the blended feed to the melters; feed is transferred continuously to the melters.
- Confine the HLW melter feed materials. The principal radiological hazard is the HLW concentrate, which is a source of direct radiation and has the potential to generate internal doses if released in respirable form. The system must also prevent hydrogen deflagration by continuous agitation of the waste and purging hydrogen from vessel headspace and associated piping.
- Decontaminate vessels. Demineralized water directed through spray nozzles is used to wash down the vessels. Vessel contents are transferred to the plant wash and drains vessel.
- Sense system operating conditions and report system data to the Process Control System (PCJ). The system senses temperature, pressure, density, and level in the vessels.
- Transfer HLW concentrate and melter feed blend to an autosampler. The HLW concentrate is analyzed to determine the proper glass former addition and the melter feed blend is analyzed to confirm the proper melter feed composition.

A flow diagram of the HFP is shown in Figure 2.1. The HFP contains two identical subsystems each comprised of two vessels, melter feed preparation vessel (MFPV) and melter feed vessel (MFV), along with associated agitators, pumps, and piping. Each subsystem supports a single HLW melter. HLW is transferred from the PT Facility lag storage vessels through a 3-inch diameter transfer line at a rate of 140 gal/min into the MFPV. When a transfer is completed, the line is flushed and flush water is transferred back to the PT Facility. The contents of the MFPV are sampled using the Autosampling System (ASX) to determine the amount of glass former to add to the batch. After the addition of glass formers and mixing, the HLW compliance samples are taken to qualify the batch. The prepared melter feed is transferred to the MFV with a cantilever pump for eventual feeding to the HLW melter.

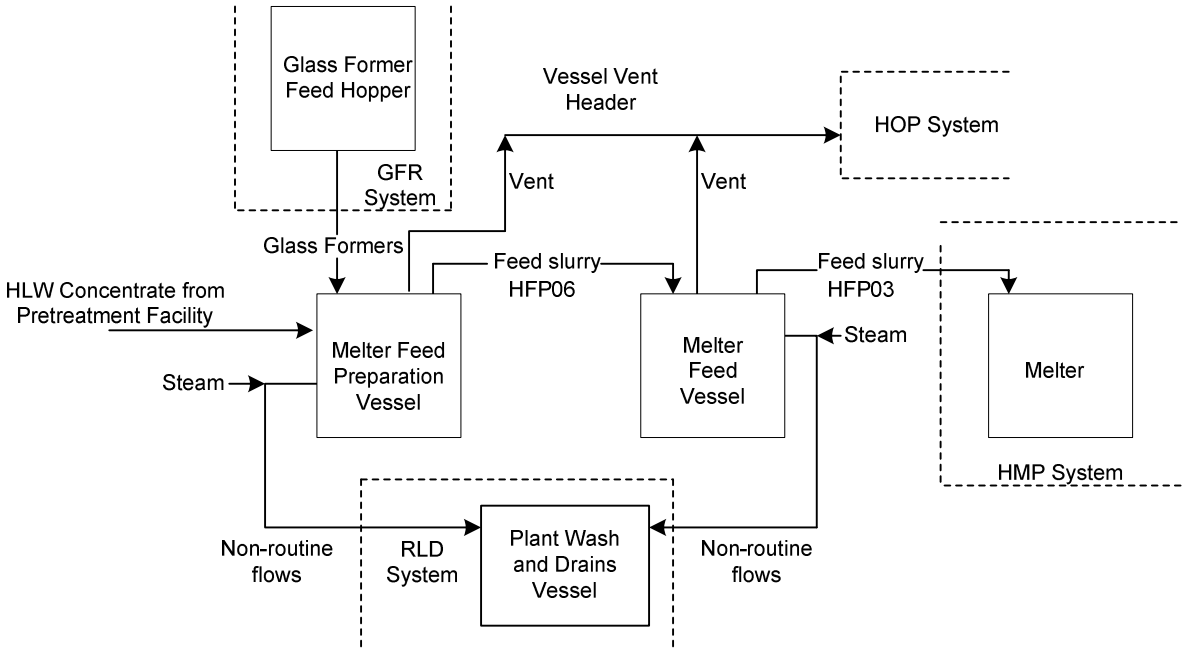

Figure 2.1. Flow Diagram of the HLW Melter Feed Process System (HFP)

The MFPVs and MFVs are 166 inches tall by 132 inches in diameter and hold a maximum batch size of 5,500 gallons; enough blended waste feed for 50 to 70 hours of melter operation. The vessels are manufactured from 316L stainless steel.

The MFPVs are standard designs for mechanically agitated vessels. Each MFPV is equipped with the following:

- Overflow line
- Vessel vent line and demister for de-entrainment
- Instrumentation for level, density, and pressure measurement
- Thermocouple for temperature measurement
- Cooling jacket to remove radioactive decay heat and heat generated by the agitator
- One mechanical agitator
- Air spargers for purging hydrogen from vessel headspace
- Two mechanical pumps to transfer waste to the MFV and to the autosampler (ASX)
- Internal fixed nozzles for periodic wash down
- Steam ejector for transfer to plant wash and drains vessel
- Antifoaming agent capability
- Demister on the vessel vent line for de-entrainment

The mechanical agitator continuously mixes the vessel contents to keep insoluble solids in suspension. The vertical pump discharges at a maximum flow rate of 50 gal/min through a valve bulge to route the concentrate, melter feed, or plant wash to one of the following: corresponding MFV, other MFPV (for melter shutdown or batch shimming), same MFPV (to recirculate for sampling), or a plant wash vessel for recycle to the PT Facility.

Each MFV is equipped with the following:

- Overflow line
- Vessel vent line and demister for de-entrainment
- Instrumentation for level, density, and pressure measurement
- Thermocouple for temperature measurement
- Cooling jacket to remove radioactive decay heat and heat generated by the agitator
- One mechanical agitator
- Two air displacement slurry (ADS) pumps
- Internal fixed nozzles for periodic washdown
- Air spargers for purging hydrogen from vessel headspace and for agitation
- Internal fixed nozzles for periodic washdown
- Steam ejector for transfer to plant wash and drains vessel
- Antifoaming agent capability
- Sample pump to transfer waste to autosampler (ASX)
- Demister on the vessel vent line for de-entrainment

The mechanical agitator continuously mixes the vessel contents to keep insoluble solids in suspension. Each ADS pump feeds one side of the melter. The two ADS pumps alternate on a cycle that semi-continuously feeds the melter at a rate of 1 to 2 gpm through separate feeding nozzles.

2.3.1.3 Relationship to Other Systems

The primary interfacing systems for the HFP are the:

- Autosampling System (ASX), which receives waste samples from the MFPVs and MFVs.
- Glass Formers Reagent System (GFR), which supplies glass formers to MFPVs.
- HLW Lag Storage and Feed Blending Process System (HLP), which supplies HLW concentrate to the MFPVs.
- HLW Melter Process System (HMP), which vitrifies the waste feed slurry produced in the HFP.

None of these interfacing systems adds a new technology to the HFP.

2.3.1.4 Development History and Status

Testing of prototypic component parts of the HFP at the Vitreous State Laboratory of the Catholic University of America (VSL), Savannah River Technical Center (SRTC), and Philadelphia Mixers has provided the primary basis for the design of the HFP. HLW simulants to support mixing system tests were developed by the WTP Project (24590-WTP-RT-04-00027). Research and Technology (R&T) testing of the mixing system at SRTC (SCT-M0SRLE60-00-132-05; SCT-M0SRLE60-00-187-02) was conducted to test blending of glass-forming chemicals and simulated wastes. Bounding physical and rheological conditions of the simulants were determined from characterization of actual tank waste samples (24590-101-TSA-W000-0004-172-00001). The ability to keep glass formers in suspension (24590-101-TSA-W000-0009-171-00001) was demonstrated during testing with the DM1200 melter system. Simulants used for mixer testing are described in WSRC-TR-2003-00220. The ADS pumps were tested at VSL (24590-101-TSA-W000-0009-118-00010) and used for a majority of test runs of the DM1200 and DM3300.

Testing of the proposed prototypic scale mechanical mixing system was completed by Philadelphia Mixers. The mixing report helped the vendor to size the mechanical mixer for the actual HLW MFPV and MFV subsystems (24590-QL-POA-MFAO-00001-10-00001).

A 7/10 (linear) scale version of the MFPV vessel and ASX is also being assembled to use for testing of the MFPV/MFV mixing efficiency (VSL-06T1000-1) to:

- Evaluate the operating parameters (minimum and maximum) for the MFPV mechanical agitator to achieve and maintain the required homogeneity of both the pretreated HLW and HLW melter feed.
- Evaluate operating parameters (minimum and maximum) for the sampling system to provide samples with compositions representative of the MFPV contents, for both pretreated HLW and HLW melter feed.
- Evaluate operating parameters (minimum and maximum) of the mechanical pump for transferring HLW melter feed from the MFPV to the MFV without affecting composition (includes the water flushes of the transfer line and the sampler system).
- Evaluate level measurement for both the bubbler (density) and the radar (level) measurement systems for both pretreated HLW and HLW melter feed at the minimum and maximum operating parameters.
- Document any operational issues associated with mixer, sampler, level indicators, and mechanical pump that may impact the ability of the system to adequately mix, sample, and transfer the MFPV contents, for both pretreated HLW and HLW melter feed.
- Evaluate the blend time requirements for the incorporation of glass-forming chemicals into the pretreated HLW in the MFPV.

2.3.1.5 Relevant Environment

The operating environment for the HFP is specified in the WTP Basis of Design (24590-WTP-DB-ENG-01-001), the HFP system description (24590-HLW-3YD-HFP-00001), and the HLW PSAR (24590-WTP-PSAR-ESH-01-002-04). The relevant operational environment for the HFP is the:

- Remote operation of process fluid equipment to blend and transfer highly radioactive slurries of tank waste concentrate and glass formers.
- Mixing of high solids slurries of glass formers and waste (approximately 50 wt% solids) that have high viscosities and shear strength.
- Transfer of high solids slurries.

All system components including the vessels are designed to be replaceable. The MFPV and MFV are also designed for a 40-year operational life.

2.3.1.6 Comparison of the Relevant Environment and the Demonstrated Environment

Extensive testing of prototypic waste feed slurry mixing systems at an engineering-scale (1/10 to 1/6 of full-scale) has been carried out on a variety of simulants whose properties had been matched to actual waste samples. SRTC (SCT-M03RLE60-132-05; SCT-M03RLE60-00-187-02) and VSL (24590-101-TSA-W000-0009-171-00001) conducted tests with a range of simulants with properties based on actual wastes from several Hanford Site tanks including C-106 and AZ-102. Additional testing is planned as part of the R&T Program that will further demonstrate the mixing concept and the sampling systems.

The mixing system design is to be provided by Philadelphia Mixer having expertise in the design and specification of mixing systems. This vendor has conducted testing of the agitation system based upon vessel design and mixing requirements. The mixing report from the vendor provided evidence of initial feasibility of the system design (24590-QL-POA-MFAO-00001-10-00001).

2.3.1.7 Technology Readiness Level Determination

The HFP was determined to be TRL 6 because of the previous use of the waste and glass former mixing technology on other DOE projects (West Valley Demonstration Project [WVDP] and Savannah River Defense Waste Processing Facility [DWPF]), and the extensive WTP-specific testing activities conducted by VSL (24590-101-TSA-W000-0009-171-00001), SRTC (SCT-M0SRLE60-00-132-05; -187-02), and by Philadelphia Mixers (24590-QL-POA-MFAO-00001-10-00001) to provide the specification for the mechanical agitators for the plant-scale system.

2.3.2 HLW Melter Process System (HMP)

2.3.2.1 Function of the HMP

The function of the HMP is to convert a blended slurry of pretreated high-level liquid waste and glass formers into molten glass and pour the glass into specially designed canisters. The HMP process is designed to produce 6.0 MT of glass per day.

2.3.2.2 Description of the HMP

The HMP is described in the HMP system description (24590-HLW-3YD-HMP-00001). The HMP consists of two melters each with the same design. The melters receive a blend of HLW concentrate and glass former additives from the HLW Melter Feed Process System (HFP), and convert this mixture to a

molten glass that is discharged into HLW canisters, which are part of the HLW Canister Pour Handling System (HPH). The IHLW (glass plus canister) product canister will eventually be disposed in a national high-level waste repository.

The HMP system description (24590-HLW-3YD-HMP-00001) lists the following functions of the HMP:

- Receive HLW Concentrates and Additives: The feed systems supply feed to the melters through feed nozzles on the tops of the melters by ADS pumps.
- Vitrify HLW Concentrate and Additives: The system converts glass former additives and HLW concentrate constituents into molten glass in the melt pool.
- Contain Glass Pool: The system contains the molten glass using heat-resisting ceramic (refractory) bricks and a cooled outer metal shell held together with spring-loaded jack bolts.
- Deliver Glass: The system delivers molten glass to stainless steel canisters where it is allowed to cool and form a highly durable borosilicate glass.
- Confine Hazardous Emissions: The system is operated under slight negative pressure that confines emissions and directs them to the HLW Melter Offgas Treatment Process System (HOP) where they are treated to eliminate hazardous constituents.
- Report System Conditions: The system measures melter control variables (e.g., temperature, pressure, melt level) and reports values to monitoring and process control stations.

Each HMP melter (shown in Figure 2.2) consists of a melt chamber and two discharge chambers. The melt chamber consists of a refractory lined tank with two electrodes on opposing walls at each end and a head space volume called the plenum. The discharge chambers are insulated, heated chambers that house troughs that direct molten glass to pour spouts and into the HLW canisters. Each melter is supported by a base structure with transport wheels that allows it to be installed and removed from its melter cave (concrete room that houses the melter) using a rail system. The melter's outer dimensions are approximately 11 ft 1 inch high, by 14 ft 4 inches long by 13 ft 8 inches wide. The melt pool is approximately 8 ft long by 5 ft wide by 4 ft deep.

The melter is fed a slurry from the HFP that is heated, dried, and converted to a glass form. The slurry feed is fed into the melter by two ADS feed pumps and falls from two feed nozzles located in the melter lid onto the surface of the molten glass. The feed material spreads out on the surface of the molten glass forming a layer called the cold cap. As the feed material in the cold cap is heated from ambient to the glass pool temperature, the following processes occur: water in the feed evaporates, gases evolve from the decomposition of salts and inorganic and organic compounds, and the feed is converted to oxides and dissolves into the melt pool. The melter contains approximately 10 MT of glass maintained at a temperature of 1150 $\pm$ 25°C.

Refractory bricks with a low corrosion rate potential (e.g., Monofrax K-3 and Monofrax E) line the HLW melt chamber. The refractory that surrounds the molten glass pool is designed to provide electrical insulation from the outer melter shell and prevent glass migration and leakage. The plenum refractory also resists corrosion from gases that evolve from the melt. All refractory must withstand high temperatures, thermal shock, molten oxides, and salts, as well as provide thermal insulation.

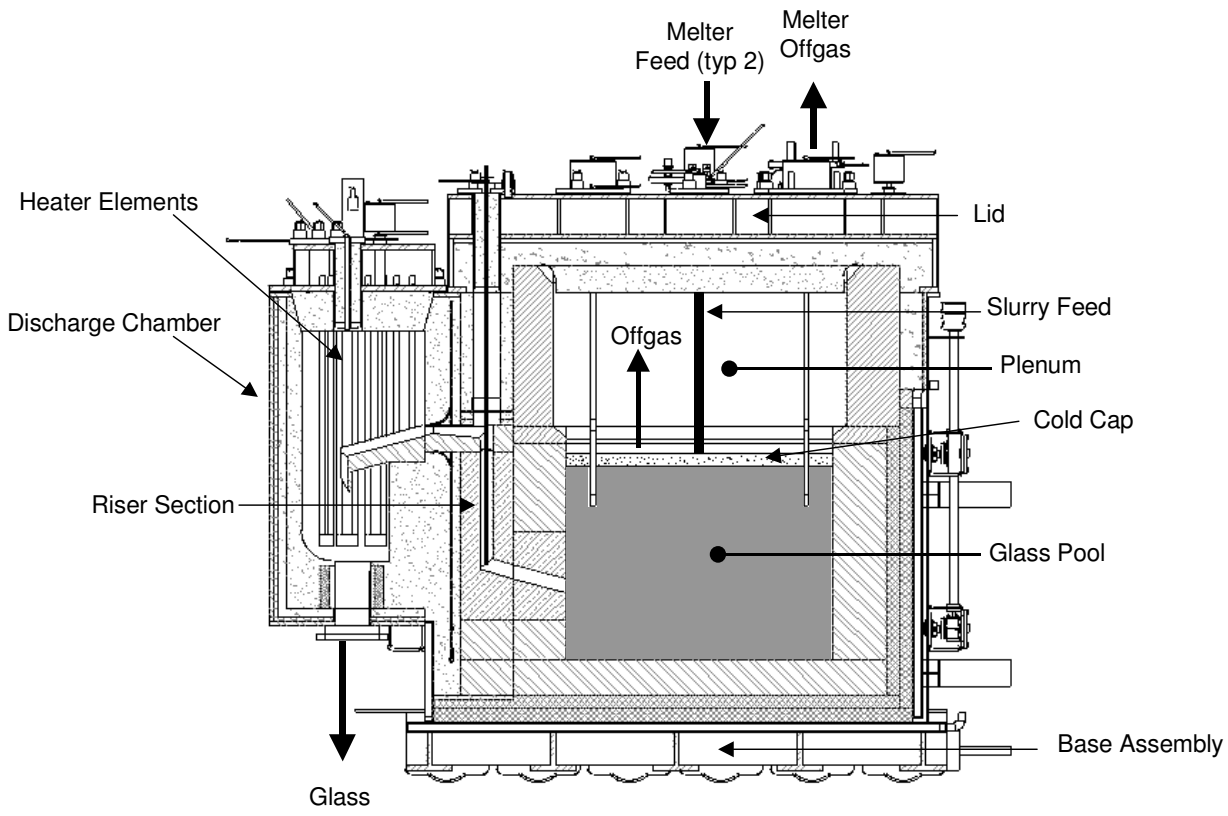

Figure 2.2. Schematic of HLW Melter Section View through Discharge Riser along North-South Axis

The outer melter shell consists of 1/4-inch of corrosion resistant alloy plates stiffened by box section tubular beams. Spring-loaded jackbolts provide constant compression for the melter walls to limit mechanical stress and the formation of gaps between refractory bricks during thermal cycling. Cooling panels attached to the outer shell limit the depth to which molten glass can penetrate melt chamber walls by "freezing" the glass as it moves outward through any gaps in the refractory lining.

The electrodes (not shown in Figure 2.2) are made from 6-inch slabs of Inconel 690 and are mounted horizontally on opposing walls of the melter pool. The electrodes are bored to provide air cooling channels for active cooling of the electrodes. Thermocouples are installed in the electrodes to measure electrode and cooling air temperatures.

The current HLW melter design incorporates five bubbler assemblies that inject air approximately 40 inches below the surface of the melt. (In response to an ORP request to increase glass production rate, Bechtel National, Inc. [BNI] is in the process of submitting a report and trend to increase the number of bubblers to seven). Bubblers are used to gently increase the natural glass circulation within the melt pool. This increases the rate of dissolution of the cold cap and significantly increases the glass production rates by evenly distributing the heat generated by the electric currents passing through the molten glass. The HLW melter bubblers are constructed of Inconel 690 alloy.

If waste glass compositions are found to have compositions that reduce bubbler life, the bubblers will use thick wall pipe and Inconel 690 glass composition for the legs. An Inconel 690 glass dam is designed to prevent molten glass from flowing from the melt chamber through the refractory to the heated discharge

chambers. The thin metal diaphragm is contained in the hot wall separating the melt chamber and the discharge chambers. It extends to regions of the discharge wall where temperatures are sufficiently low to freeze the glass and prevent leakage.

The glass is discharged from the melter through the discharge riser into an Inconel 690 trough that routes the molten glass to a pour spout from which it drops into the 2 ft in diameter by 15 ft high stainless steel IHLW canister. The distance from the pour spout tip to the top of the canister is approximately five feet. The discharge riser block contains a channel bored through the refractory. An air lift lance is inserted into the discharge riser channel. During glass pouring, air is bubbled out the tip of the air lift lance causing molten glass to travel up the riser to the discharge trough. Stopping the flow of air stops the flow of glass. Glass will be discharged at rates of 200 to 500 kg/hr in batch fashion. The entire discharge chamber is maintained at a temperature of approximately 1050 to 1100°C by eight silicon carbide discharge heaters.

The HMP includes two subsystems to determine the fill level of glass in the canister. The primary subsystem is an infrared thermal imaging camera that can detect the glass level over the upper 60% of the canister. A secondary subsystem uses gamma radiation detection to determine glass level. WTP specifications require the average canister fill height to be 95% with a minimum of fill height of 87%. The level detection systems are interlocked with the air lift system to stop air flow to the lift if the glass level rises above a preset maximum height.

Offgas consisting of water vapor, air from in-leakage and bubblers, and gases generated by the melt process is discharged to the HLW Melter Offgas Treatment Process System (HOP).

2.3.2.3 Relationship to Other Systems

The major process systems that interface with the HMP are described in Section 6.1 of the HMP system description (24590-HLW-3YD-HMP-00001). Major interfaces include the:

- HLW Melter Feed Process System (HFP) (24590-HLW-3YD-HFP-00001)
- HLW Melter Offgas Treatment Process System (HOP) and secondary offgas Process Vessel Vent Exhaust System (PVV) (24590-HLW-3YD-HOP-00001)
- HLW Canister Pour Handling System (HPH) (24590-HLW-3YD-HPH-00001)

The HMP receives a blend of concentrated HLW and glass former additives from the HLW Melter Feed Process System (HFP). It converts the blend into molten glass that is poured into the HLW canisters that are part of the HLW Canister Pour Handling System (HPH). Melter offgas is fed into the HLW Melter Offgas Treatment Process System (HOP).

The interfacing systems do not add any new technologies to the HMP.

2.3.2.4 Development History and Status

The WTP HLW melter is based on similar design concepts to the DWPF at the Savannah River Site and the WVDP HLW melter at the West Valley Site. The melt pool area of the WTP melter (3.7 m^2) is larger than those of the DWPF (2.6 m^2) and WVDP (2.2 m^2) melters. However, the major technological difference between the WTP melter and the DWPF and WVDP melters is that the WTP melter uses bubblers to gently agitate the melt pool, and thereby substantially increases melter throughput per unit area.

The melters for the WTP were designed by Duratek (now part of Energy*Solutions*). Duratek based its design on lessons from the following:

- West Valley Demonstration Project (WVDP)
- Defense Waste Processing Facility (DWPF)
- Experience with its second generation DM5000 melter used to process Savannah River M-Area low level waste (5.0 m^2)
- DM100 (0.1 m^2), DM1000 (1.0 m^2), and DM1200 (1.2 m^2) melters at the Catholic University of America/Vitreous State Laboratory of the (VSL)
- WTP DM3300 LAW Pilot Melter (3.3 m^2) at Duratek's Columbia, Maryland, site

The VSL and Columbia melters operate only with non-radioactive simulant wastes.

Relevant prototypes of the melter and supporting components (e.g., feed nozzles, thermowells, bubblers) that make up the HMP have been tested in one or more of the above melters (24590-101-TSA-W000-0009-171-00001; 24590-101-TSA-W000-0009-153-00001; 24590-101-TSA-W000-0009-162-00001). The melter tests confirmed the performance and behavior of equipment components and different process flowsheets representative of the initial waste feeds that will be processed in the HLW melter. Equipment components tested included the melter and its specific design features: melter feed nozzle, melter thermowells, melter bubblers, melter pouring system, and representative instrument and control systems.

Most of the development work for the WTP HLW melter has been carried out on the DM1200, which has a melt surface area and melt pool height that are 32% and 57%, respectively, of the WTP HLW melter. Its discharge chamber design is prototypic of the WTP melter. The feed and bubbler assemblies are also prototypic.

The DM1200 has been operated for more than 5 years, melting more than 1.5 million lb of feed, and producing more than 0.5 million lb of glass (24590-101-TSA-W000-0009-171-00001). After 5 years, the DM1200 has shown minimal signs of wear on melter electrodes, thermal insulation, and discharge chamber leading to confidence that the required 5-year melter life will be achieved.

The testing process for HMP has consisted of the following:

- Determination of the physical and chemical properties of the waste as it will be fed to the HMP (24590-101-TSA-W000-004-172-00001; SCT-M0SRLE60-00-83-01A; SCT-M0SRLE60-00-193-00004; 24590-101-TSA-W000-0004-87-09; 24590-101-TSA-W000-009-172-00001). This required small-scale pretreatment of actual waste.
- Development of simulants that match relevant physical and chemical properties of the waste feed (SCT-M0SRLE60-00-211-00001; 24590-101-TSA-W000-009-172-00001).
- Small- and large-scale testing of simulants to determine waste/glass former blend compositions, melter operating conditions and procedures, and waste glass composition and properties (24590-101-TSA-W000-0009-171-00001; 24590-101-TSA-W000-009-48-00001; 24590-101-TSA-W000-009-98-00011; SCT-M0SRLE60-00-110-00023). Engineering-scale tests using simulants lasting 288 days have been carried out using the Duratek DM1200 HLW pilot melter.
- Small-scale confirmatory testing using actual waste (SCT-M0SRLE60-00-195-00001; SCT-M0SRLE60-00-218-00001; SCT-M0SRLE60-00-21-05; 24590-101-TSA-W000-0009-168-00001).

Most of the HLW melter testing has focused on simulants representative of the initial tank waste feeds to be processed in the WTP (e.g., from Hanford Site tanks C-104, C-106, AZ-101, AZ-102), all of which are high-iron feeds.

The original design requirement for the WTP HLW throughput was 1.5 MTG/day per melter. Initial tests at the VSL concluded that this throughput could not be attained without the use of bubblers (24590-HLW-RPT-RT-01-003). In 2002, the specification for WTP HLW throughput was raised to 3.0 MTG/day per melter necessitating extensive testing of bubblers in the DM1200 (24590-101-TSA-W000-0009-171-00001). DM1200 testing was augmented by physical model testing at full WTP HLW melter depth and testing in the DM1200 under idling conditions to determine bubbler air supply requirements; i.e., ability to run double nozzle bubbler with a single air supply (24590-101-TSA-W000-0009-153-00001). All these results were combined with engineering analyses to specify bubbler design and operational requirements for the plant design (24590-101-TSA-W000-0009-162-00001).

Physical modeling and extrapolation of DM1200 results indicate the required throughput of 3.0 MTG/day can be attained for the initial HLW feeds provided feed contains more than 15 wt% undissolved solids at the WTP Contract waste loading requirements. Attempts to achieve the required throughput with solids contents below 15% resulted in unstable melter conditions and frequent blockages of the film cooler.

There were concerns raised in the External Flowsheet Review Team (EFRT) review of the WTP (CCN:132846) that the bubbler air flow rates required to make the required glass production rate in the HLW melter (3.0 MTG/day) may exacerbate entrainment of feed and glass particles from the cold cap. These particles could lead to plugging of the inlet of the offgas system film cooler and deposit solids in the melter to submerged bed scrubber (SBS) transition pipe. Both of these areas of solids buildup could lead to pluggage. In responses to this potential issue, the WTP has evaluated applicable DM1200 testing data to determine the limits of operation of the melter bubblers to prevent pluggage of the film cooler (CCN:144619). The reference HLW melter bubble design is a “J-tube” with two air discharge orifices per assembly. Based upon experimental data, the glass surface bubbling density for the HLW melter will need to be limited to 20 scfm/m^2 of bubbled area (bubbled area is the fractional area of the melter surface bubbling affects). Therefore, a maximum of 1.5 scfm per bubbler assembly assuming five bubbler assemblies per melter is permissible. The HLW feed concentration must also have a minimum glass yields of 325 gram glass per liter. Testing in the DM1200 was conducted within these constraints with acceptable film cooler performance.

The HLW bubbler life requirement is 2 months. Testing in the DM1200 has demonstrated Inconel 690 bubbler life in excess of 2 months with very little corrosion of the bubbler in the cold cap area. The J-bubbler had accumulated over 60 days of feeding without failure and acceptable wear in the bubbler nozzle area (24590-101-TSA-W000-0009-119-00003). These results were obtained with low sulfur wastes. Tests conducted on LAW simulants have shown that high sulfur melts are much more corrosive to Inconel 690 than the HLW simulants that have been tested. If HLW feeds high in sulfur are to be processed in the WTP HLW melter, the more expensive materials used in the fabrication of the LAW bubblers (e.g., alloy MA-758) may be required for the HLW bubblers.

2.3.2.5 Relevant Environment

The HFP will be operating in a high-radiation environment that necessitates remote operation and maintenance. Melter life is projected to be 5 years. Some melter system components will have shorter operating lives (e.g., melter bubblers will have to be replaced every few months). The relevant operational environment for the HMP is identified in the system description (24590-HLW-3YD-HMP-00001) as follows:

- The system shall melt, contain, and pour molten glass at temperatures up to 1200°C.
- The system shall vitrify wastes with a range of physical properties.

- The discharge chamber shall continuously heat the glass using lid mount heaters to avoid becoming clogged.
- An airlift system shall pour glass into the containers using a bubbler lance immersed in the riser glass.
- Maintenance of the HLW melter shall be conducted to periodically replace bubbler assemblies, level detector probes, and thermowells.
- Installing and replacing a melter system shall be conducted for a melter that weights approximately 89 tons (101 tons with a full-glass inventory).

2.3.2.6 Comparison of the Relevant Environment and the Demonstrated Environment

Remote operation and maintenance of similar melters has been demonstrated at the WVDP and DWPF. However, some operational and maintenance features of the HMP are new. For example, although bubbler replacement has been demonstrated on the Duratek nonradioactive pilot melters, regular remote replacement of bubblers has not been demonstrated. However, remote replacement of airlifts and thermowells is an identical operation to bubbler replacement. Approximately 600,000 lb of simulated HLW glass was made in the DM1200 melter during the development and testing program (24590-101-TSA-W000-0009-171- 00001) over 288 run days. During most of that time, operating conditions (e.g., bubbler location, design, and flow rate) were being varied in attempts to optimize melter performance. About 20 days of operation was completed in the final prototypic operating mode.

The HLW melter was operated at the VSL with extensive operator intervention (some HLW melter parameters set and operators frequently looking at the cold cap for "operational cues") to maintain test conditions, per project instructions. In the WTP HLW Facility, the process control will be non-visual based on instrumentation responses (e.g., plenum temperature, bubbler air rate, melt level). Control mechanisms and procedures will relate the measured physical phenomena to process control actions, both operator and automatic. These operational requirements will be established as part of the testing program to support cold commissioning of the HLW melter in the HLW Facility.

The demonstrated environment for the HMP has focused on the initial tank waste compositions to be processed in the HLW Facility and has consisted of the following:

- Determination of the physical and chemical properties of the waste as it will be fed to the HMP.
- Development of simulants that match relevant physical and chemical properties of the waste feed.
- Small- and large-scale testing of simulants to determine waste/glass former blend compositions, melter operating conditions/procedures, and waste glass composition/properties. Engineering-scale tests using the Duratek DM1200 HLW pilot melter.
- Small-scale confirmatory testing using actual waste.

2.3.2.7 Technology Readiness Level Determination

The HMP was determined to be TRL 6 because of the extensive development of the melter concept for previous DOE projects combined with the development and testing of the DM1200 pilot-scale melter for the WTP.

Extensive small-scale and engineering-scale prototypical testing of the melter system has been completed to support the initial waste feeds anticipated at the WTP from Hanford Site tanks (AZ-101, AZ-102, C-104, C-106), which have waste loading limits based on iron. This initial development can support the production of all of the Hanford Site tank wastes. However, to optimize operations at the WTP, a longer-

term technology support program is recommended to optimize waste loadings for tank waste compositions containing higher concentrations of aluminum, (Al), phosphorus (P), bismuth (Bi), and chromium (Cr). In addition, alternative HLW feeds compositions such as those higher in sulfur concentrations may require and alternative bubbler design.

2.3.3 HLW Melter Offgas Treatment Process System and Process Vessel Vent Exhaust System (HOP/PVV)

2.3.3.1 Function of the HOP/PVV

The function of HOP is to remove hazardous particulates, aerosols, and gases from the HLW melter offgas and vessel ventilation process offgas. The function of the PVV is to provide a pathway for vessel offgas to the HOP for treatment. Confinement barriers are provided by maintaining a vacuum on vessels and associated piping for the safety of facility staff. The combined primary and vessel ventilation offgas stream is discharged to the secondary offgas system, and then exhausted to the atmosphere from the facility stack. These systems treat the HLW melter offgas so that it conforms to relevant federal, state, and local air emissions requirements at the point of discharge from the facility stack.

2.3.3.2 Description of the HOP/PVV

The HOP and PVV extraction systems are described in the HOP and PVV systems description (24590-HLW-3YD-HOP-00001). The HLW melter offgas stream is discharged from the melter plenum to the primary offgas system. The principal gases generated by the melter are air and steam with small percentages of NO_x and other melter feed decomposition products. Melter offgas treatment calculations referenced in the HOP system description provide estimates of the airborne components emitted from the melter. Melter offgas travels through the film coolers, SBS, and Wet Electrostatic Precipitator (WESP). The PVV air is combined with the WESP offgas discharge, and the combined HOP/PVV offgas is further treated by the primary system high-efficiency mist eliminators (HEME) and high-efficiency particulate air (HEPA) filters. Offgas travels from the primary offgas system to the secondary offgas system.
The secondary offgas system removes mercury, iodine-129, volatile organic compounds (VOC), NO_x, and volatile halides (i.e., chlorine [Cl] and fluorine [F]). Carbon-14 and tritium are not abated.

A block flow diagram of the HOP/PVV is provided in Figure 2.3.

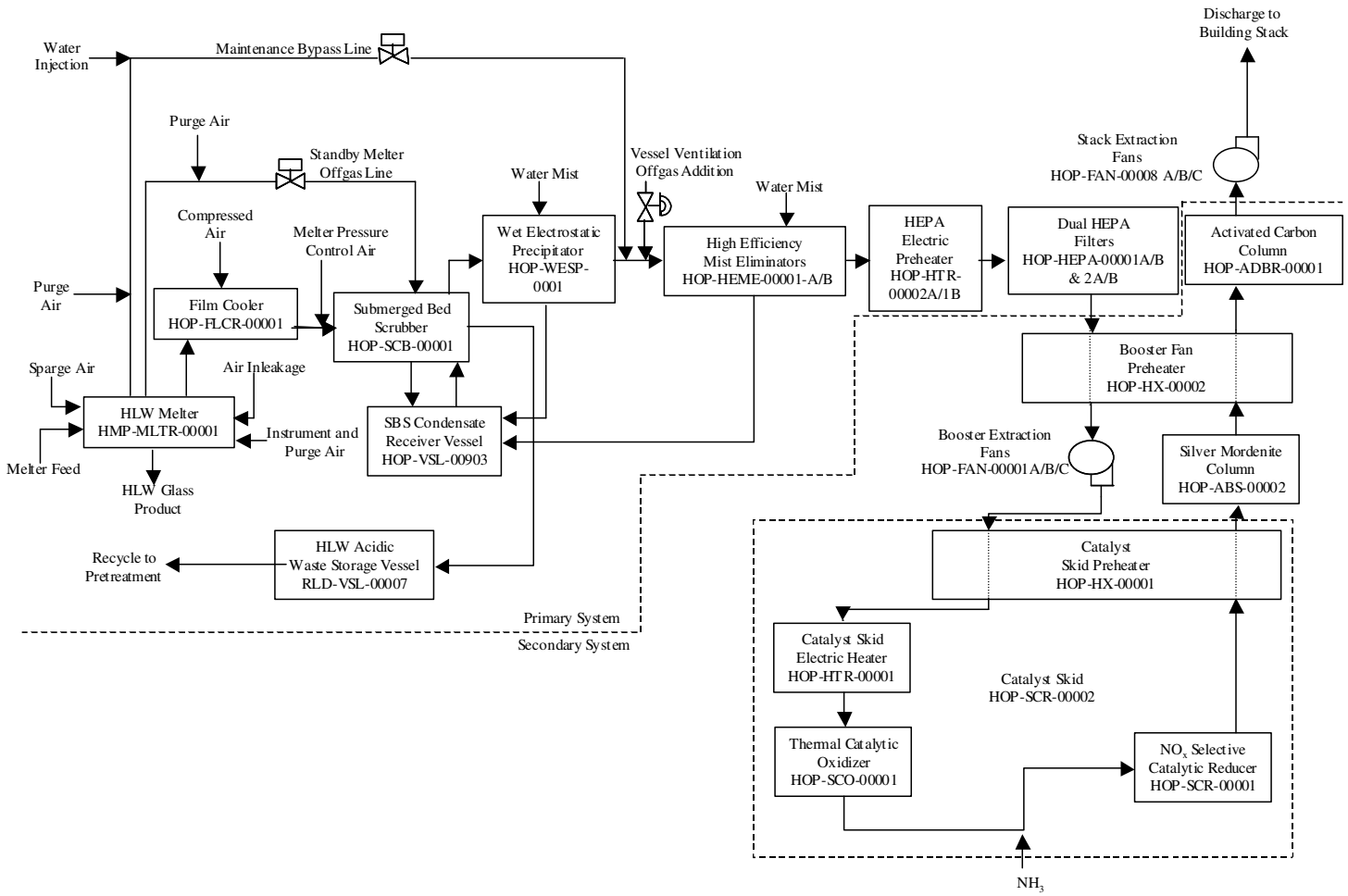

Figure 2.3. Block Flow Diagram for the HOP/PVV

The primary HOP consists of the following major components for each melter:

Offgas Film Coolers and Transition Section. The HLW melter offgas is initially accelerated through the melter film cooler. This film cooler is a double-walled pipe designed to introduce air along the walls through a series of holes or slots in the inner wall. The injection air that flows along the pipe wall mixes with, and cools, the offgas from its melter plenum temperature of about 750°F to a film cooler discharge temperature of about 510°F. The film cooler includes the middle assembly with ten louvers that make up most of the inner film cooler wall. From the film cooler, the exhaust gas flows to a melter offgas jumper transition section that incorporates a mounting flange for a film cooler cleaner.

Offgas Jumper and Melter Pressure Control System. Plant air (in addition to film cooler air) is injected near the outlet of the film cooler to facilitate melter plenum pressure control. The melter offgas jumper and transition line is a piping assembly that routes the melter offgas from the film cooler to the SBS and is connected by flanges. The standby offgas jumper is another line between the melter and submerged bed scrubber (SBS) with a pressure activated control valve. When the melter pressure reaches a pressure set point, -1 inch WC, the valve opens automatically to provide an additional pathway for gas to the SBS, thereby reducing the melter pressure. The offgas maintenance bypass jumper is a piping assembly that periodically routes the melter offgas from the melter to the offgas line between the WESP and the HEME for short periods.

Submerged Bed Scrubbers (SBS). Offgas from the film coolers enters a packed bed submerged in water. The SBS is a passive device designed for steam quenching, scrubbing of entrained particulates and partial removal of aerosols from melter offgas. The SBS normally operates at about 120°F but can operate between 104°F and 140°F. The particulate decontamination factor (DF) (amount of component in/amount of component out) is usually from 5 to 15.

Wet Electrostatic Precipitators (WESP). Offgas from the SBS is routed to a WESP for further removal of particulates and aerosols. The offgas enters the unit and passes through a distribution plate. The evenly distributed saturated gas then flows through the tubes of the WESP. The tubes act as positive electrodes. Each tube has a single negatively charged electrode that runs down the tube's center. A high-voltage transformer rectifier supplies the power to these electrodes so that a strong electric field is generated along the electrode, supplying a negative charge to aerosols as they pass through the tubes.
The negatively charged aerosols move toward the positively charged tube walls where they are attracted to the (grounded) collector plate walls (or the central rods, depending on their charge), where they coalesce and are washed into the WESP sump by a downward water spray. The condensate then drains into a sump collection vessel.

High-Efficiency Mist Eliminator (HEME). The purpose of the HEME is to further remove radioactive aerosols from the HLW melter offgas and the vessel ventilation air, and to reduce the solids loading rate on the HEPA filters. A HEME is a high-efficiency wet filter that has a minimum aerosol removal efficiency of approximately 99% for aerosols less than one micron. There is a water misting nozzle in the HEME gas inlet to wash water soluble solids from the filter element.

High-Efficiency Particulate Air (HEPA) Filters and Preheaters. HEPA filters provide the final removal of radioactive particulates to protect downstream equipment from contamination. The combined offgas stream is passed through a preheater. The electric heaters increase the nominal gas temperature from 131°F to 149°F to avoid condensation in the HEPA filters. The heated offgas passes through HEPA filter housings forming two parallel trains: a main train used in normal operations and an auxiliary train used as an installed backup. The HEPA filter housings in each train are arranged to form primary and secondary stages of filtration.

The Secondary Melter Offgas Treatment System includes the following equipment:

Heaters and Fans. Multiple heaters and fans (booster fan preheater, booster extraction fans, catalyst skid preheater, and catalyst skid electric heater) are employed to move air through and maintain a vacuum on the system. Heaters maintain the offgas temperature above the dewpoint to prevent condensation, which could erode the fans.

Silver Mordenite Column. The purpose of the silver mordenite column is to remove gaseous iodine-129 from the melter offgas stream. The removal efficiency of the column for iodine is 99.9% for temperatures between 300°F to 390°F. Also, the silver mordenite will absorb volatile forms of chlorine and fluorine. Thirty-six cartridges are loaded into a plenum structure similar to that for HEPA filters. Gas flows down through the cartridges to the lower plenum for exhaust. When the cartridge loading capacity is exhausted, the cartridges are replaced. The column has a 40-year life; the cartridges will have to be periodically changed out when loaded (roughly every 5 years).

Activated Carbon (AC) Column. The AC column removes volatile mercury from the offgas. The AC column is made up of two beds housed in two chambers. The offgas normally flows through both beds in series. The AC column is designed to obtain a mercury DF of 1,000 (e.g., 99.9% efficient). The mercury concentration in the offgas is reduced to $\leq 45\ \mu g/m^3$. The spent AC will be removed by gravity and a pneumatic conveyer for collection in containers. The AC will be stabilized in a grout mixture for disposal.

Thermal Catalytic Oxidizer (TCO). The TCO oxidizes organics to carbon dioxide and water and possibly acid gases (depending on the presence of halogenated organics in the gas). The heated offgas is passed through the VOC catalyst to oxidize VOCs and carbon monoxide to carbon dioxide and water vapor. The VOC catalyst is a platinum-based material deposited on a metal monolith, which is held in frames, inserted, and removed through access doors. Pilot-scale testing is in progress to demonstrate the organic removal efficiency.

NO_x Selective Catalytic Reducer (SCR). The offgas has high levels of NO_x because the melter decomposes the parent nitrate/nitrite compounds. Gas from the TCO flows into a chamber where the gas is mixed with ammonia gas injected into the gas stream. Following ammonia injection, the offgas is passed through the SCR catalyst to reduce NO_x to nitrogen and water vapor. The catalyst will likely be vanadium oxide deposited on a substructure that is held in frames inserted and removed through access doors. Catalyst life has not been established. However, catalyst change out should not be more frequent than once every several years.

Stack Extraction Fans. Three variable speed fans provide the motive force for air movement of the melter offgas and the vessel ventilation offgas. The fans also maintain the process offgas system under vacuum relative to the surroundings. Each fan is sized to exhaust 50% of the air flow, such that two fans are required for normal operation. Should one fan fail, the standby fan automatically comes on line. The fans are on emergency backup power.

2.3.3.3 Relationship to Other Systems

Melter process offgas treatment equipment interfaces are provided in Section 9 of the systems description for HOP/PVV (24590-HLW-3YD-HOP-00001). The primary interface with the HOP/PVV is the HLW Melter System (HMP) (24590-HLW-3YD-HMP-00001). The two HLW melters have dedicated primary and secondary offgas treatment systems that are coupled to each other. The exhaust fans are used to ventilate process vessels that connect to both melter systems. The melters and process vessels must be

maintained under a slight vacuum at all times to avoid releasing radioactivity to the surroundings. This safety feature must be maintained under normal and off-normal operating conditions.

In case of offgas pipe plugging between the melter and the SBS, the standby offgas system would activate. In the unlikely event that an offgas surge exceeds the capacity of the primary offgas line and standby jumper, a pressure relief device is provided on the standby jumper to vent the melter gases to the melter cave. These gases would be filtered by the C5 filter system prior to environmental release.

2.3.3.4 Development History and Status

The design of the HOP/PVV offgas systems is based upon the use of equipment systems (SBS, film coolers, and HEMEs) for DOE's WVDP. In addition, Savannah River DWPF utilized the HEMEs.

The VSL conducted tests on the DM1200 melter and offgas systems from 2001 through 2005. The DM1200 offgas treatment system consists of SBS, WESP, HEME, HEPA, SCR, packed-bed caustic scrubber (PBS), and a second HEME. A full-flow, sulfur–impregnated, activated-carbon adsorber bed was installed in 2004. The TCO and selective catalytic reduction units were not placed into operation until 2002. Offgas system testing was conducted for several system components: film cooler (24590-101-TSA-W000-0009-171-00001), SBS (24590-101-TSA-W000-0009-54-00001), TCO (24590-101-TSA-W000-0009-87-09), and WESP (24590-101-TSA-W000-0009-174-00001). The HEME, WESP, HEPA filter, and TCO/SCR technologies are commercially available and replaceable within the HLW Facility.

DM1200 and offgas system tests were conducted with high-level waste from Hanford Site tanks C-104, C-106, AZ-101, and AY-102 simulants (24590-101-TSA-W000-0009-172-00001) with adjustments of several toxic metals, nitrogen oxides, and waste organics to bound the concentrations. The tests were designed to determine system destruction removal efficiency (DRE) and DF values for a variety of regulated constituents under WTP normal and challenge melter system conditions. The following issues were observed as summarized in the indicated reports.

<u>Submerged Bed Scrubber (SBS) Blockage</u>. During the initial DM1200 tests (24590-101-TSA-W000-0009-54-00001), solid deposits formed near the base of the downcomer at the bottom of the SBS-packed column. The result was an unwanted pressure drop so that the ventilation system would be unable to pull a vacuum on the melter. This negative pressure is necessary to direct the gases from the melter to the offgas system. SBS modifications (opened the annulus and shortened the submerged portion of the downcomer) eliminated the accumulation of downcomer deposits over the last 51 days of DM1200 testing. These modifications were completed to provide a design concept that more closely match the WVDP and WTP HLW Facility designs.

Throughout DM1200 testing, the SBS was periodically drained and inspected for deposits and unusual wear. The most significant findings were accumulations of deposits in the bottom of the SBS. The accumulation rate of solids showed no evidence of declining with increasing test duration. Solutions were removed from the SBS throughout each test by suction through a wand that extends to the bottom of the SBS bowl. Over the 5-year period of testing, solutions with total solids content as high as 10,000 mg/L were processed through the wand with only one clogging event.

<u>Film Cooler and Transition Line Blockage</u>. Throughout testing on the DM1200 melter, plugging of the film cooler and transition line occurred, particularly in tests with higher melter bubbling rates. At high melter bubbling rates and high temperatures, the film cooler and transition line plugging required that they be cleaned several times per day. The transition line was simple to clean, and required that the line be banged on the side with a hammer. Inspection of film cooler showed 50% blockage at the bottom with

light coating on louvers. The film cooler was flushed with water, which was ineffective. Feeding was interrupted in order to manually rod out the film cooler deposit and, less frequently, a portion of the transition line had to be disassembled for cleaning. R&T staff concluded the transition line blockages could be due to film cooler wash water being entrained into the offgas line. The periodic wetting of solids and the pipe surfaces encouraged solids deposits and accumulation. After instructing VSL to cease the washing operation, transition line accumulations were significantly reduced. Air inlets were added to the underside of the film cooler to prevent blockages at the bottom from bridging over the film cooler opening. Eventually, the film cooler air inlets at the bottom of the film cooler became corroded and blocked with solids that could not be cleaned.

A thorough review of operational data indicated that film cooler plugging could be limited by (a) reducing the bubbling rate (CCN:144619), which had the undesirable effect of reducing the glass production rate; or (b) by increasing the number of bubbling outlets, which permits the use of greater amounts of bubbler air without concentrating the air flow in a limited number of locations. However, with the current WTP melter and film cooler design, testing of a mechanical means to remove blockages was recommended to ensure that it will remove blockages without damaging the delicate film cooler louvers (24590-101-TSA-W000-0009-171-00001).

On March 17, 2006, the EFRT completed their review of melter test data and published their report (CCN:132846). HLW film cooler plugging was identified as an unresolved issue. BNI was directed to prepare a response plan to document the operating conditions required to minimize or avoid film cooler plugging, and to revise design criteria for the film cooler clean-out device (CCN:144619). According to the BNI response plan (CCN:142012), feed will be fed to the DM1200 melter with a high bubbling rate. After the film cooler clogs, a prototype film cooler cleaner will attempt to remove the clog. The results of this testing will indicate if additional modifications to the melter, bubbler, film cooler, or film cooler cleaner system are needed.

Temperature Limits of the Carbon Bed. Per the study *Mercury Abatement Technology Assessment for the WTP* (24590-WTP-RPT-ENG-01-01), the best choice for WTP mercury abatement is sulfur-activated carbon. Sulfur-activated carbon was selected because there is significant commercial experience and because sulfur-activated carbon is the most cost effective alternative. Testing results (CCN:033010; 24590-101-TSA-W000-0009-97-00003; 24590-101-TSA-W000-0009-166-00001) showed that allyl alcohol and LAW levels of nitrate concentrations cause the temperature of the bed to rise. This might result in components bleeding out of the bed and poisoning the downstream catalyst units if the carbon is overheated. Later VSL testing (VSL-05L5290-2) further revealed that if the bed nitrogen oxide (NO), NO_2, and allyl alcohol concentrations are limited, then the temperature rise is reduced to acceptable levels.

Wet Electrostatic Precipitators (WESP) Operational Lifetime. Except for the insulators, the WESP vessels and internals must sustain a 40-year lifetime. Limited access will be available through the metal enclosure for WESP insulator change out (24590-HLW-3YD-HOP-00001). Therefore, the system must have adequate features to address both WESP operational failures and materials failures over the expected operational lifetime. The WESP Corrosion Evaluation (24590-HLW-N1D-HOP-00002) determined that WESP vessels and internals should be fabricated using 6% moly stainless steel.

The WESP Corrosion Evaluation (24590-HLW-N1D-HOP-00002) determined that the internals could accumulate solid deposits that contain halides that cause pitting and crevice corrosion in off-normal situations. An internal memo (CCN:091869) stated that an even water distribution is necessary to efficiently flush solids from the internals and meet the life expectancy of the electrodes. VSL tests of the WESP (24590-101-TSA-W000-0009-174-00001) showed DF degradation over time due to solids buildup and corrosion on the electrode. Flush and deluge systems were added to the WESP to wash the solids

from electrodes and removed the solids buildup, but use of the deluge resulted in the shorting of the electrical connections during testing because the top insulators did not drain. It was difficult to restore power to the electrodes after deluge for some LAW feeds.

The final design of the WTP redesigned the WESP to isolate the electrical connections and provided an air purge to avoid wetting the connections from the deluge water. Heated purge air was added to dry water from the internals after the deluge. The new WTP WESP design was flushed during shop tests at the vendor facility using slurry feed of silica dust and water (DMP-4145-FTR-003). The functional test was performed by the vendor where 130 lb of silica dust was injected into the WESP as a slurry. Flush and deluge water were used to clean internals. After flushing and deluge, there were no visible signs of particulate buildup on any internal surfaces. The system was operated with heated purge air for 15 minutes after flushing and deluge. Shop tests confirmed that there was no noticeable dust or water on internal areas where purge air was maintained. Shop tests (DMP-4145-FTR-003) further confirmed that power was restored to the WTP WESP after deluging without shorting electrical connections. Restart time for the end of flush to normal operations varied from 50 minutes to 1 hour and 15 minutes.

Thermal Catalytic Oxidation (TCO) Destruction Removal Efficiency (DRE). The WTP dangerous waste permit conditions requires the HLW melter offgas systems meet the 99.99% DRE removal efficiency performance standard for principal organic dangerous constituents (PODC). In order to ensure that the required DREs for hazardous organics are met, TCO units were added to the HLW offgas treatment system. Based on agreement between the WTP, the U.S. Environmental Protection Agency, and the Washington State Department of Ecology, the PODCs selected to demonstrate DRE were naphthalene and allyl alcohol (CCN:080128). DRE DM1200 test results (24590-101-TSA-W000-0009-166-00001) exceeded 4-9s DRE in all 12 allyl alcohol test runs and in 10 out of the 12 naphthalene test runs. The naphthalene emission rates for the failed runs were 0.11 and 0.2 mg/min for HLW and LAW, respectively. The passing runs had naphthalene emission rates that ranged from 0.02 to less than 0.002 mg/min.

2.3.3.5 Relevant Environment

The operating environment for the HOP/PVV is specified in the WTP *Basis of Design* (24590-WTP-DB-ENG-01-001) and the HOP/PVV systems description (24590-HLW-3YD-HOP-00001). The relevant environment for the HOP/PVV is the:

- Operation of equipment system with high reliability.
- Operation of the primary system for the operating life of the WTP.
- Operation of the primary system in high-contamination/high-radiation areas (C5/R5).
- Operation of the offgas systems with high initial temperatures, high moisture levels, significant particulate loads, and the presence of corrosive acid gasses.
- Use of fixed bed catalyst and absorber beds in the presence of trace poisoning agents.
- Operation of the equipment system at a reduced pressure compared to atmospheric.

The primary offgas treatment system shall remove sufficient radionuclides such that the secondary offgas treatment system can be contact or semi-remotely maintained. The primary offgas system components will be maintained using remote methods.

2.3.3.6 Comparison of the Relevant Environment and the Demonstrated Environment

The HOP/PVV was demonstrated in a relevant environment during DM1200 melter testing. It is projected that the HLW Facility will achieve operational requirements in normal and challenge conditions as a result of the following WTP design characteristics that were demonstrated during DM1200 testing.

Submerged Bed Scrubber (SBS) Blockage

- The annulus of the downcomer for the SBS was opened and the submerged portion of the downcomer was shortened.
- To help minimize the buildup of the solids in the bottom of the SBS, solution jets or spargers were added that agitate the solution at the bottom of the SBS. The solid particulate is guided to the removal point by the swirling flow.
- A siphon line draws slurry from the bottom of the SBS through the suction square to the acidic waste storage vessel.
- The SBS condensate receiving vessel collects condensate and flush solutions from the SBS. The capability exists to flush the SBS and SBS condensate receiver vessel with water or nitric acid (24590-HLW-3YD-HOP-00001). Solution is pumped from the receiving vessel back to the SBS jets. SBS solution then overflows to the receiver.

Wet Electrostatic Precipitators (WESP) Lifetime

- The WESP was designed so that electrical connections are isolated from the water spray.
- A water misting nozzle at the gas inlet facilitates saturating the inlet gas, keeping the collected solids damp (eases washing solids from walls), and providing flush water for washing solids from the collection walls.
- A deluge system at the top of the tube section provides periodic washing capability as necessary to remove solids from the electrodes and maintain the performance of each electrode.
- Water and collected solids drain from the bottom of the WESP into a condensate receiving tank.
- The capability is being included to fill the WESP with nitric acid and allow the WESP internal to soak, thus facilitating solids removal.
- The WESP vessel and internals are manufactured from 6% moly stainless steel for additional corrosion resistance.

Offgas Jumper and Film Cooler Blockage

- Melter offgas jumpers are designed with cleanout access ports, and can be replaced if blockages cannot be removed.
- There are holes in the bottom of the film cooler assembly for air flow to prevent solid accumulation.
- There is the capability to add water to the film cooler inlet air to periodically flush solids buildup from the air distribution slots.
- The film cooler was designed to be replaceable in case clogging is a significant problem.
- A mechanical film cooler cleaner was developed that will be tested at VSL.

- Melting bubbling rates were limited to 1.5 scfm per bubbler, two additional bubblers were added to the HLW melter, and slurry concentrations should be above 325 g-glass/L (CCN:144619; 24590-101-TSA-W000-0009-162-00001).

Temperature Limits of Carbon Bed

- Allyl alcohol and NO_x concentrations in the carbon bed are limited to prevent a temperature rise as result of adsorption and chemical reactions in the activated carbon (AC) bed.
- A water fire suppression system is included as a precaution against AC fires.
- Safety modifications were added to the AC bed.
- Activated carbon vendor tests are planned to obtain efficiency and loading information at the Idaho National Laboratory.

Thermal Catalytic Oxidation (TCO) Destruction Removal Efficiency (DRE) Requirements

The WTP Project evaluated the impact of not achieving the DRE test requirements on the WTP design (CCN:128559; 24590-WTP-RPT-ENV-03-00005) and concluded that the actual WTP offgas system design is more robust compared to the DM1200 offgas system. Based upon analysis, sufficient design contingency exists in the WTP design and it is projected that the HLW Facility will achieve the DRE requirements in normal and challenge conditions. Resolution of issues associated with the offgas system not achieving the DRE test requirements shall be confirmed during cold commissioning of the HLW Facility.

2.3.3.7 Technology Readiness Level Determination

The HOP/PVV was determined to be a TRL 5 because risks remain with the HLW melter film coolers, SBS, carbon columns, and the WESP design. It is recognized that HOP/PVV system designs have a significant development basis in the WVDP and testing with the DM1200 melter and offgas system. However, further development and testing should be completed to reduce the following project risks.

Recommendation 1

Testing of a prototypical HLW film cooler and film cooler cleaner should be completed to demonstrate the adequacy of the equipment concepts prior to cold commissioning.

> *Note: This testing is part of the planned work to resolve the EFRT issue M-17, "HLW Film Cooler Plugging," dealing with film cooler blockages.*

The use of a film cooler in non-bubbled HLW melters is demonstrated in operations at the WVDP and the Savannah River DWPF. The process conditions that increase film cooler blockages in bubbled melters such as the WTP HLW melter have been evaluated (CCN:144619) but are not completely understood. Consistent delivery of a high-solids feed from ultrafiltration to HLW vitrification, and limiting the melter bubbler air rates are factors that can mitigate film cooler blockage. While testing has shown it is possible to maintain HLW vitrification melt rates with lower concentration feeds, this mode of operation could increase plugging in the film cooler. There may be cold cap conditions and bubbler locations where film cooler plugging is more prevalent, as well as high-bubbling conditions. Understanding these conditions would be useful for optimization of melter design and production rates.

Because the DM1200 was operated for a limited period of time (approximately 20 days) with the final design configuration, it is not known whether the cited limitations on bubbler rates will prevent excessive

film cooler blockages. The film coolers appear to be adequate for a melter capacity of 3 MTG/day without modification. If capacities greater than 3 MTG/day are required, design changes to the melter may be warranted.

The solutions planned for film cooler blockages (limit bubbling rate, film cooler cleaner, replaceable film cooler) do not include evaluation of design options that might prevent film cooler blockages from forming. For example, there might be design solutions such as splash plates within the plenum below the film cooler, redesign of the melter lid for a more optimum bubbler layout with an increased number of bubblers, or a taller melter plenum that would be more effective in de-entrainment of particulates.

Recommendation 2

Further testing of the WESP is recommended to address operational modes. The VSL tests indicated difficulties restoring power to the WESP electrodes may be related to the melter feed composition (24590-101-TSA-W000-0009-174-00001). In some cases, the WESP electrodes could not be brought back up to full voltage after significant operation with LAW feeds. While no problems were observed with HLW simulants during DM1200 tests, operational information should be confirmed for the HLW feed to understand if feed properties caused the problems.

Further evaluation is also recommended to prove the viability of 6% molybdenum (Mo) stainless steels for WESP internals and vessels in the WTP offgas environment. Selection of a corrosion resistant alloy for WESP vessels and internals is of critical importance, because the WESP vessel is not accessible for maintenance (except for the electrode connectors) or removable for the 40-year life of the HLW Vitrification Facility. The WESP vessel and internals are constructed of 6% Mo stainless steel (24590-HLW-N1D-HOP-00002). The article by Phull (2000) was the basis for the selection of the 6% Mo for the WTP in the WESP corrosion evaluation (24590-HLW-N1D-HOP-00002. Phull showed that even 6% Mo stainless steels exhibited very slight susceptibility to corrosion attack after 656 days of exposure to flue gases. Data from Phull implies that a 6% Mo alloy or greater stainless steel is needed in corrosive environments where long life is mandatory.

Recommendation 3

Activated carbon vendor testing should be completed to confirm the behavior of organics, acids (nitrogen oxide [NO_x,] sulfur dioxide [SO_2], and halogen), sulfur, and mercury within the carbon bed.

> *Note: Testing on the carbon bed material is scheduled to be completed as part of the WTP baseline within the next 12 months. Any problems identified by vendor testing of the activated carbon bed material may potentially impact the WTP design and the WTP environmental performance test plan (CCN:128559).*

2.3.4 Pulse Jet Mixer (PJM) System, HLW Melter Offgas Treatment Process System (HOP), and Radioactive Liquid Waste Disposal System (RLD)

2.3.4.1 Function of the PJM System, HOP, and RLD

The function of the PJM system is to mix waste streams comprised of liquid and solids in specially designed vessels to dissipate gases, blend liquids and solids, and suspend solids for sampling and transport. Vessels within the HOP/PVV and RLD use PJMs to support mixing.

The RLD's primary function is to receive effluents from contaminated waste treatment processes areas in the HLW Facility, equipment flushes, and facility sumps and flushes. The RLD vessels provide

temporary storage for these liquid effluents before neutralization (if required) and transfer to the PT Facility for treatment.

2.3.4.2 Description of the PJM System, HOP, and RLD

The PJMs are described in the system description for pulse jet mixers and supplemental mixing subsystems (24590-WTP-3YD-50-00003). The HOP/PVV includes two vessels mixed with PJMs. These are the SBS condensate receipt vessels (HOP-VSL-00903; HOP-VSL-00904). The SBS condensate receipt vessels are described in the HOP/PVV systems description (24590-HLW-3YD-HOP-00001).

The RLD contains two vessels that are mixed with PJMs. These are the plant wash and drains vessel (RLD-VSL-00008) and the acidic waste vessel (RLD-VSL-00007). In addition, the RLD includes an offgas drains and collection vessel (RLD-VSL-00002). The RLD vessels are described in the RLD system description (24590-HLW-3YD-RLD-000001).

A schematic that shows the relationship of the HOP and RLD vessels is provided in Figure 2.4.

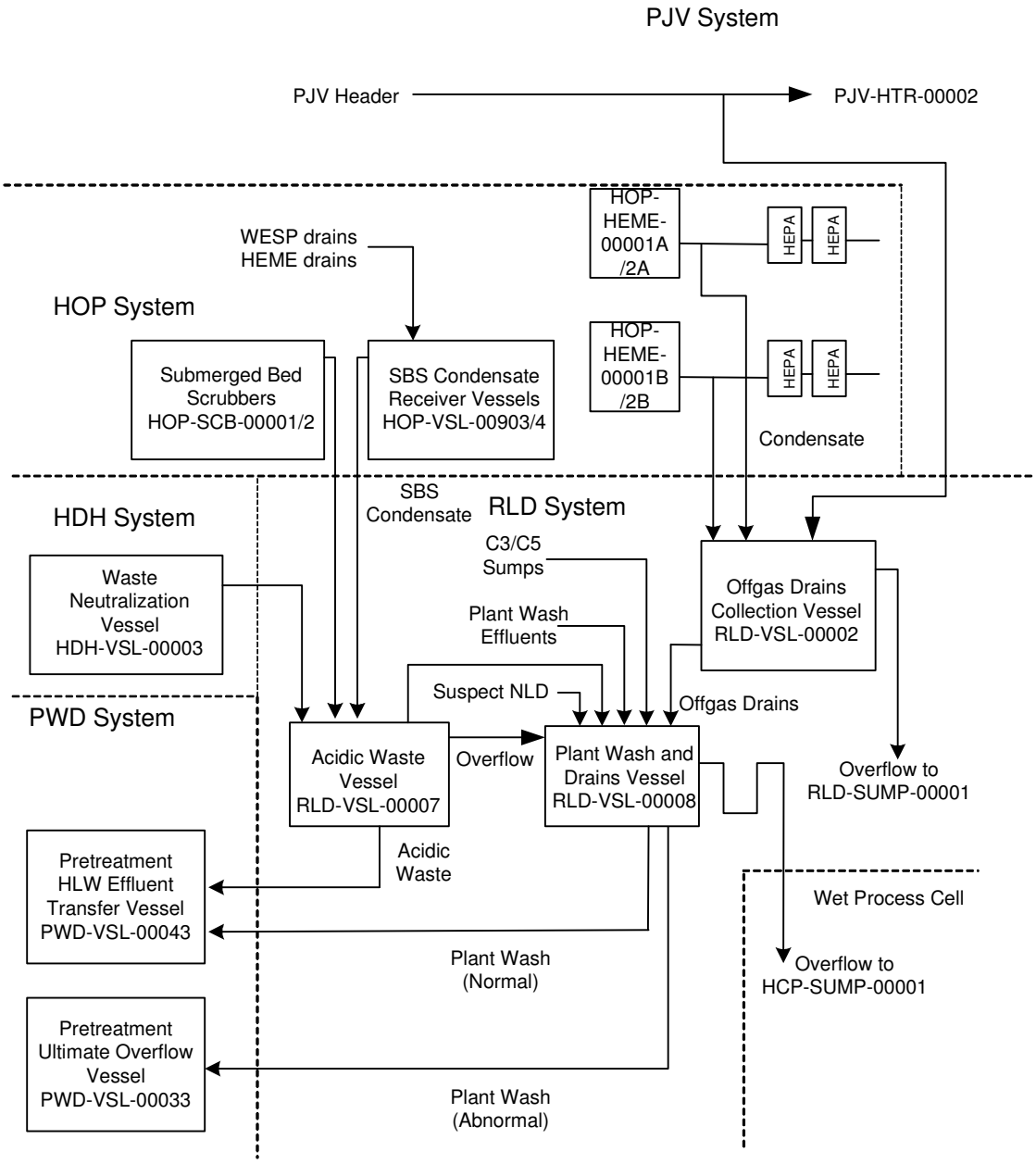

Figure 2.4. Simplified Flow Diagram Showing the HOP and RLD Vessels and their relationship to Interfacing Vessel System

Pulse Jet Mixers (PJM)

PJM devices are long, cylindrical vessels that draw in fluid by a vacuum and then pressurize to eject the fluid to cause mixing; much like a baster draws in and expels fluid. These devices have been shown to be reliable and have no moving parts that require maintenance. Thus, the PJM was selected to be used in vessel systems that were designed to have no maintenance over a 40-year operational design life of the WTP.

The PJMs can be operated either in a continuous pulsing mode, or turned off for a time and restarted in the pulsing mode, depending on process requirements. In vessels that contain particulates, the solids will settle to the bottom between mixing periods. When the PJMs restart, settled solids need to be re-suspended. The PJM design is based on technology developed jointly by AEA Technology and British Nuclear Fuels Limited (BNFL); BNFL was part of the original contractors for the WTP Facility.
A design guide (24590-CM-TSA-HXYG.0008) was prepared to provide the technical basis for the initial design of the PJMs. Later, AEA technology provided the final designs of the WTP PJM mixing systems. Based on waste characteristics, vessel size, and geometry, the number and power (e.g., discharge fluid velocity) of the PJMs were determined.

A PJM system consists of the following components:

- Valves
- Fluidic controller assembly
- Jet pump pair
- Piping
- PJM vessels fitted with nozzles, located in the process vessel

A jet pump is used to pull a vacuum on the PJM and draw process fluids into the PJM vessel from the process vessel. This is the suction phase of the PJM cycle. When the PJM vessel is full, the jet pump is switched from vacuum to pressure mode for the drive cycle. Air pressure applied to the PJM vessel is used to force fluid back out of the PJM vessel and into the process vessel, thereby mixing the process vessel contents.

Melter Offgas Treatment Process System (HOP)

The SBS condensate receiving vessels (BNI Drawing 24590-HLW-MV-HOP-P0001) are used to collect condensate from the SBS, flush solution from the WESP, and flush solution from the HEME. The vessels are 12 ft diameter by 13 ft 9 inches tall. The vessel contains four PJM tubes and four reverse flow diverters (RFD). An RFD is a fluid device used to transfer fluid using air as the motive force.
The vessels are supported on a skirt, and there are two 24-inch inspection ports on the skirt. A system has been supplied to provide ultrasonic measurements to detect vessel erosion on the bottom. Cooling water jackets provide 408 ft^2 heat transfer area and 380,000 Btu/hr duty on the vessel sides and bottom.
The skirt area is vented, and the vessel assembly is electrically grounded. The batch volume is 5,900 gallons. The vessel is constructed of Hastalloy C-22 (24590-HLWN1D-HOP-00009) with 304-L stainless steel being used for the cooling jackets on the vessel exterior. Two RFDs operate at a time for SBS solids suspension, leaving two RFDs as spares. The vessel is vented to the SBS via a vent line.
The SBS overflow lines may also vent the vessel. The SBS condensate receiver vessel has been designed to be maintenance free once the system becomes radioactively contaminated. The vessel contents may be emptied through the SBS, normal route, or can be emptied to the acidic waste collection vessel (RLD-VSL-00007). An installed spray system is used to wash the vessel down with demineralized water for cleaning and to facilitate decontamination and decommissioning.

Radioactive Liquid Waste Disposal System (RLD)

The RLD includes vessels, sumps, piping, pumps, and instrumentation. The vessels include the acidic waste vessel (RLD-VSL-00007), the plant wash and drains vessel (RLD-VSL-00008), and the offgas drains collection vessel (RLD-VSL-00002). It also includes numerous sumps throughout the contaminated areas of the HLW Facility.

The RLD receives effluents from sources throughout the HLW Facility and provides interim storage before transfer to the PT Facility where the waste is recycled to the process. The system is designed to receive effluents, sample them, neutralize them to a pH of 8 or greater, and transfer these effluents to the PT Facility. The acidic waste vessel (RLD-VSL-00007) receives condensate from the SBSs (HOP-SCB-00001/00002), SBS condensate receiver vessels (HOP-VSL-00903/00904), and the waste neutralization vessel (HDH-VSL-00003). The plant wash and drains vessel (RLD-VSL-00008) receives miscellaneous plant wash and vessel wash effluents. The offgas drains collection vessel (RLD-VSL-00002) receives drains from the low points in the offgas system ducts and maintains a hydraulic seal between offgas systems (Pulse Jet Ventilation System [PJV] and Melter Offgas Treatment Process System [HOP]).

The RLD receives the HOP SBS condensate and WESP and HEME drains, the HDH neutralized waste, various plant, vessel, and sump washes, effluents from miscellaneous radioactive drains and the auto sampling drains, and suspect waste from the Nonradioactive Liquid Waste Disposal System (NLD).

When filled, the RLD vessels contents are sampled, neutralized if required, and the contents transferred to the PT Facility.

The RLD-VSL-00007 is fabricated from 6 Mo and RLD-VSL-00008 is fabricated from 316-L stainless steel. Thus, RLD-VSL-00007 was designed in the HLW flowsheet to receive, store, and neutralize corrosive wastes from the SBS condensate receipt vessels and the HLW Canister Decontamination Handling System (HDH). Both vessels have a nominal 5 wt% undissolved solids design limit.

2.3.4.3 Relationship to Other Systems

The major interfaces with the RLD are the SBSs (HOP-SCB-00001/2), the PT/HLW effluent transfer vessel (PWD-VSL-O0043), the waste neutralization vessel (HDH-VSL-00003), and the PT ultimate overflow vessel (PWD-VSL-00033). The system also receives drains from low points in offgas ducting, and various plant wash and vessel wash effluents from throughout the facility. The system boundaries between the RLD vessels and other HLW Facility systems are the nozzles on the RLD vessels.
The system boundary between the RLD vessels and the PT Facility Plant Wash and Disposal System (PWD) is in the transfer piping 5 feet outside of the PT Facility.

2.3.4.4 Development History and Status

Technologies relevant to PJM system, RLD, and HOP are those associated with mixing using PJMs and specification of the materials of construction of the PJMs and vessels.

Extensive nonradioactive simulant testing has been conducted by the WTP Contractor to test the PJM and vessel design concepts for wastes containing high solid concentrations. These studies were focused on establishing the design and operational requirements for the vessels that are nominally referred to as containing non-Newtonian wastes. These vessels are UFP-VSL-00002A/00002B; HLP-VSL-00027A/00027B; and HLP-VSL-00028. Key testing reports are found in the following reports: 24590-101-TSA-W000-0004-124-03, Rev. 00B; 24590-101-TSA-W000-0004-72-08, Rev. 00B; 24590-101-TSA-W000-0004-118-02, Rev. 00B; 24590-101-TSA-W000-0004-114-00019, Rev. 00B;

24590-101-TSA-W000-0004-114-00016, Rev. 00A; 24590-101-TSA-W000-0004-153-00002, Rev. 00A; and 24590-101-TSA-W000-0004-153-00002, Rev. 00B.

The PJM mixed vessels in the HLW Facility are used to blend low-solids (less than 5 wt%) containing process wastes. These wastes are believed to exhibit Newtonian fluid characteristics.

A recent review of the WTP flowsheet (CCN:132846) identified potential design issues with the PJM mixed vessels containing Newtonian process wastes:

> "Issues were identified related to mixing system designs that will result in insufficient mixing and/or extended mixing times. These issues include a design basis that discounts the effects of large particles and of rapidly settling Newtonian slurries. There is also insufficient testing of the selected designs."

In response to this issue, the WTP Contractor has established a plan (24590-WTP-PL-ENG-06-0013) for testing to evaluate the mixing behavior of vessels that are anticipated to contain Newtonian fluids. This plan has the following objectives related to Newtonian vessels including the vessels in the HOP and RLD.

- Confirm the mixing system design of Newtonian vessels to re-suspend settled waste following a mixing system shutdown.
- Develop testing information that allows accurate prediction of required mixing time for various vessel-mixing functions.
- Demonstrate that normal process mixing successfully meets mixing requirements for each Newtonian processing vessel.

The design basis particle characteristics for Newtonian mixing have not been formally documented by the WTP Contractor. However, a recent report (WTP-RPT-153) presents a revised particulate size and density distribution for the Hanford Site tank wastes. The particle size distribution will be used to develop simulant for testing PJM vessel mixing.

Performance criteria for PJM mixing in the HLW vessels has recently been established (24590-WTP-RPT-PR-07-003) to support definition of a testing program to validate the adequacy of the PJMs in the HLW vessels to blend liquids and solids, maintain solids in suspension, and re-suspend settled solids.

As a precursor to the testing program, the WTP Contractor has conducted an engineering evaluation of the ability of the PJM mixed vessels in the HLW Facility to suspend solids (CCN:150383). The assessment used a correlation for mixing provided by BHR Group Limited (FMP 064) that provided guidance on the sizing of fluid jets (e.g., applicable to PJM nozzle and discharge sizing) to suspend solids. This initial assessment indicates that the mixing capability of the PJMs in the HLW Facility vessels (HOP-VSL-00903; HOP-VSL-00904; RLD-VSL-00007; RLD-VSL-00008) is adequate.

Materials of construction for the HLW Facility vessels have been established through a corrosion evaluation assessment (24590-WTP-GPG-M-047). Corrosion evaluations are based upon a detailed design guide used by the WTP Contractor that considers process chemistry, mechanisms for corrosion, and erosion. The ORP has extensively reviewed and evaluated the vessels design and material of construction to support a conclusion that the vessel design can support a 40-year operational life.

2.3.4.5 Relevant Environment

The operating environment for the PJM system, RLD, and HOP is specified in the WTP *Basis of Design* (24590-WTP-DB-ENG-01-001, Rev. 1C), RLD system description (24590-HLW-3YD-RLD-00001), PJM system description (24590-HLW-3YD-PJM-00001), HOP/PVV systems description (24590-HLW-3YD-HOP-00001), and HLW PSAR (24590-WTP-PSAR-ESH-01-002-04). The relevant operational environment for the systems is:

- Remote operation of process fluid mixing equipment to prevent the release of radioactive liquid and solid materials.
- Operation of the equipment systems over a 40-year design life.
- Capability of the mixing systems to mobilize and suspend solids that collect on the bottom of the vessels.

2.3.4.6 Comparison of the Relevant Environment and the Demonstrated Environment

The PJM system, RLD, and HOP vessel systems are based upon design concepts demonstrated in nuclear facilities operated at the Sellafield Site, U.K. (24590-CM-TSA-HXYG.0008). The mixing system design specifications for the WTP were provided by AEA. Testing of the PJM mixing systems for high solids containing slurries has been completed by the WTP Contractor.

The WTP Contractor has identified the need to complete additional testing to demonstrate the ability of the PJMs to mix and re-suspend solids for low solids containing solutions. This work is schedule to be complete in late 2007.

The 40-year design life of the PJMs and vessels has been determined based upon process chemistry, a review of corrosion rates of materials of construction and the preparation of formal corrosion evaluations. The corrosion evaluations are independently reviewed by a BNI chief engineer and a corrosion consultant.

2.3.4.7 Technology Readiness Level Determination

The PJM system supporting the HOP vessels (HOP-VSL-00903; HOP-VSL-00904) and the RLD vessels (PLD-VSL-00007; RLD-VSL-00008) was determined to be a TRL 4 because specific, quantifiable design requirements for the PJM technology have not been established to support testing and design.
The definition of the PJM mixing requirements must consider the functional requirements (i.e., safety, environmental, and process control) of the vessels and the anticipated waste characteristics in the vessel. See 07-DESIGN-047 for further discussion on the PJM technology.

Work associated with the EFRT M-3 IRP (24590-WTP-PL-ENG-013) relating to inadequate mixing system design will involve performing a number of scaled tests to investigate the hydrodynamic phenomena involved with PJM operation. Tests will be performed at scales ranging from approximately 1/10 to 1/2 (based on vessel diameter), with single and multiple PJMs in operation in the tanks.
A number of these tests will involve particle-laden fluids so that suspension, entrainment, and re-suspension issues can be investigated. The tests will be extensively instrumented to provide a wealth of quantitative data on the fluid and particle dynamics involved with PJM operations (24590-PTF-TSP-RT-06-007).

This is based on the use of the PJM technology to suspend and mix the anticipated low solids concentration streams present in these vessels, the corrosion resistant alloys used to fabricate the vessels, and the extensive testing that was completed to verify the operation of non-Newtonian PJM mixed vessels.

Recommendation 4

Testing of the ability of pulse jet mixer (PJM) technology for dissipating gases, blending liquids, and suspending solids should be completed as planned, and a determination made on the adequacy of the PJM designs for the HOP and PLD vessels. Specific requirements for PJM mixing should be established (see 07-DESIGN-047).

> *Note: This testing is part of the WTP baseline as part of resolution of the EFRT issue M3, "Inadequate Mixing System."*

3.0 Findings, Recommendations and Observations

3.1 Findings

The TRA for the HLW facilities identified five systems that were determined to be CTEs:

- HLW Melter Feed Process System (HFP) used to prepare the HLW melter feed
- HLW Melter System (HMP), which includes the HLW melter
- HLW Melter Offgas Treatment Process System/Process Vessel Vent Exhaust System (HOP/PVV) used to treat the HLW melter offgas
- Pulse Jet Mixer (PJM) system and the Radioactive Liquid Waste Disposal System (RLD), including the SBS condensate vessels in the HOP used to store and blend secondary liquid wastes.

The results of the TRL assessment are summarized in Table 3.1. Consistent with NASA and DoD practice, this assessment used TRL 6 as the level that should be attained before the technology is incorporated in the WTP final design. The CTEs were not evaluated to determine if they had matured beyond TRL 6.

3.2 Conclusions and Recommendations

The Assessment Team has concluded that the technology status of HLW facilities is sufficiently mature, except for testing of the following systems, to continue to advance the final design of these facilities. The following recommendations are made based upon the TRA and the information presented in this report.

1. Testing of a prototypical HLW film cooler and film cooler cleaner should be completed to demonstrate the adequacy of the equipment concepts prior to cold commissioning.

   Note: This testing is part of the planned work to resolve the EFRT issue M-17, "HLW Film Cooler Plugging," dealing with film cooler blockages.

   The use of a film cooler in non-bubbled HLW melters is demonstrated in operations at the WVDP and the Savannah River DWPF. The process conditions that increase film cooler blockages in bubbled melters such as the WTP HLW melter have been evaluated (CCN:144619) but are not completely understood. Consistent delivery of a high-solids feed from ultrafiltration to HLW vitrification, and limiting the melter bubbler air rates are factors that can mitigate film cooler blockage. While testing has shown it is possible to maintain HLW vitrification melt rates with lower concentration feeds, this mode of operation could increase plugging in the film cooler. There may be cold cap conditions and bubbler locations where film cooler plugging is more prevalent, as well as high-bubbling conditions. Understanding these conditions would be useful for optimization of melter design and production rates.

   Because the DM1200 was operated for a limited period of time (approximately 20 days) with the final design configuration, it is not known whether the cited limitations on bubbler rates will prevent excessive film cooler blockages. The film coolers appear to be adequate for a melter capacity of 3 MTG/day without modification. If capacities greater than 3 MTG/day are required, design changes to the melter may be warranted.

The solutions planned for film cooler blockages (limit bubbling rate, film cooler cleaner, replaceable film cooler) do not include evaluation of design options that might prevent film cooler blockages from forming. For example, there might be design solutions such as splash plates within the plenum below the film cooler, redesign of the melter lid for a more optimum bubbler layout with an increased number of bubblers, or a taller melter plenum that would be more effective in de-entrainment of particulates.

2. Testing and analysis to demonstrate the adequacy of the Wet Electrostatic Precipitator (WESP) design is recommended.

   Further testing of the WESP is recommended to address operational modes. The VSL tests indicated difficulties restoring power to the WESP electrodes may be related to the melter feed composition (24590-101-TSA-W000-0009-174-00001). In some cases, the WESP electrodes could not be brought back up to full voltage after significant operation with LAW feeds. While no problems were observed with HLW simulants during DM1200 tests, operational information should be confirmed for the HLW feed to understand if feed properties caused the problems.

   Further evaluation is also recommended to prove the viability of 6% Mo stainless steels for WESP internals and vessels in the WTP offgas environment. Selection of a corrosion resistant alloy for WESP vessels and internals is of critical importance, because the WESP vessel is not accessible for maintenance (except for the electrode connectors) or removable for the 40-year life of the HLW Vitrification Facility. The WESP vessel and internals are constructed of 6% Mo stainless steel (24590-HLW-N1D-HOP-00002). The article by Phull (2000) was the basis for the selection of the 6% Mo for the WTP in the WESP corrosion evaluation (24590-HLW-N1D-HOP-00002. Phull showed that even 6% Mo stainless steels exhibited very slight susceptibility to corrosion attack after 656 days of exposure to flue gases. Data from Phull implies that a 6% Mo alloy or greater stainless steel is needed in corrosive environments where long life is mandatory.

3. Activated carbon vendor testing should be completed to confirm the behavior of organics, acids (nitrogen oxide [NO_x,] sulfur dioxide [SO_2], and halogen), sulfur, and mercury within the carbon bed.

   Note: Testing on the carbon bed material is scheduled to be completed as part of the WTP baseline within the next 12 months. Any problems identified by vendor testing of the activated carbon bed material may potentially impact the WTP design and the WTP environmental performance test plan (CCN:128559).

4. Testing of the ability of PJM technology for dissipating gases, blending liquids, and suspending solids should be completed as planned, and a determination made on the adequacy of the PJM designs for the HOP and PLD vessels. Specific requirements for PJM mixing should be established (see 07-DESIGN-047).

   Note: This testing is part of the WTP baseline as part of resolution of the EFRT issue M3, "Inadequate Mixing System."

Table 3.1. Technology Readiness Level Summary for the HLW Critical Elements

Critical Technology Element/Description	Technology Readiness Level	Rationale
HLW Melter Feed Process System (HFP) The HFP mixes HLW waste and glass formers to provide feed for the HLW melters.	**6**	There has been extensive WTP and vendor testing to demonstrate the adequacy of the mixing systems.
HLW Melter Process System (HMP) The HMP vitrifies the waste feed slurry produced in the HFP.	**6**	The HLW melter has a significant development basis in previous DOE projects and developmental tests for the WTP. Testing of four reference HLW feeds was determined adequate to support initial operations of the WTP. However, extensive evaluation of alternative anticipated HLW glass compositions has not been completed.
HLW Melter Offgas Treatment Process System/Process Vessel Vent Exhaust System (HOP/PVV) The HOP removes hazardous particulates, aerosols, and gases from the HLW melter offgas and vessel ventilation process offgas. The PVV provides a pathway for vessel offgas to the HOP for treatment.	**5**	The HOP/PVV designs have a significant development basis in the WVDP and testing with the DM1200 melter and offgas system. However, the HOP/PVV was determined to be a TRL5 because risks remain with the HLW melter film coolers, SBS, carbon columns, and the WESP design; the later of which must achieve the lifetime of 40 years.
Pulse Jet Mixer (PJM) System/Radioactive Liquid Waste Disposal System (RLD)/HOP The PJM system mixes waste streams comprised of liquid and solids, blends liquids and solids, and suspends solids for sampling and transport. The RLD receives effluents from contaminated waste treatment processes areas in the HLW Facility, equipment flushes, and facility sumps and flushes. HOP SBS Condensate Vessels - includes all vessels in the HLW Facility that are mixed with PJMs	**4**	Extensive testing of PJMs to demonstrate adequate mixing of slurries with non-Newtonian rheology characteristics has been completed. The WTP Contractor has recently identified requirement to test PJMs for use in vessels containing slurries with Newtonian rheology characteristics to demonstrate adequacy of design to mix, suspend, and re-suspend solids. No clear requirements exist for PJM mixing requirements. Thus, the PJMs were determined to be TRL 4. See 07-DESIGN-047 for further discussion.

4.0 References

1. 07-DESIGN-042, *Technology Readiness Assessment for the Waste Treatment and Immobilization Plant (WTP) Analytical Laboratory, Balance of Facilities and LAW Waste Vitrification Facilities*, February 2007, U.S. Department of Energy, Richland, Washington.
2. 07-DESIGN-047, *Technology Readiness Assessment for the Waste Treatment and Immobilization Plant (WTP) Pretreatment Facility*, June 2007, U.S. Department of Energy, Richland, Washington.
3. 24590-101-TSA-W000-0004-114-00019, Rev. 00B, *Overview of the Pulse Jet Mixer Non-Newtonian Scaled Test Program*, WTP-RPT-127, Rev. 0, January 20, 2006, Bechtel National, Inc., Richland, Washington.
4. 24590-101-TSA-W000-0004-118-02, Rev. 00B, "*Large Tank Experimental Data for Validation for the FLUENT CFD Model of Pulsed Jet Mixers*, July 7, 2003, Bechtel National, Inc., Richland, Washington.
5. 24590-101-TSA-W000-0004-124-03, Rev. 00B, *Demonstration of Ability to Mix in a Small-Scale Pulsed-Jet Mixer Test Facility*, March 13, 2003, Bechtel National, Inc., Richland, Washington.
6. 24590-101-TSA-W000-0004-144-01, Rev. 00B, *Rheological and Physical Properties of AZ-101 HLW Pretreated Sludge and Melter Feed*, WTP-RPT-096, Rev. 0, March 31, 2005, Bechtel National, Inc., Richland, Washington.
7. 24590-101-TSA-W000-0004-172-00001, Rev. 00A, *Final Report: Technical Basis for HLW Vitrification Stream Physical and Rheological Property Bounding Conditions*, WTP-RPT-112, Rev. 0, January 5, 2006, Bechtel National, Inc., Richland, Washington.
8. 24590-101-TSA-W000-0004-72-08, Rev. 00B, *Results of Small-Scale Particle Cloud Tests and Non-Newtonian Fluid Cavern Tests*, November 19, 2003, Bechtel National, Inc., Richland, Washington.
9. 24590-101-TSA-W000-0004-87-09, Rev. 00B , *Filtration, Washing and Caustic Leaching of Hanford Tank AZ-101 Sludge*, WTP-RPT-043, Rev. 1, October 2, 2003, Bechtel National, Inc., Richland, Washington.
10. 24590-101-TSA-W000-0004-99-00010, Rev. 00B, *Non-Newtonian Slurry Simulant Development and Selection for Pulse Jet Mixer Testing,* August 17, 2004, Bechtel National, Inc., Richland, Washington.
11. 24590-101-TSA-W000-0009-118-00010, Rev. 00A, *Final Report - ADS Pump Testing as Part of Integrated DM1200 Testing of HLW Compositions Using Bubblers*, VSL-04R4800-2, May 24, 2004, Bechtel National, Inc., Richland, Washington.
12. 24590-101-TSA-W000-0009-119-00003, Rev. B, *Final Report - High-Level Waste Melter System Materials of Construction Testing*, July 22, 2002, Bechtel National, Inc., Richland, Washington.
13. 24590-101-TSA-W000-0009-121-00006, Rev. 00A, *Modeling the Behavior of Noble Metals During HLW Vitrification in the DM1200 Melter*, May 25, 2005, Bechtel National, Inc., Richland, Washington.

14. 24590-101-TSA-W000-0009-144-03, Rev. 00B, *Noble Metals Testing on the DM1200 Pilot Melter System with AZ-101 HLW Simulants*, VSL-03R3740-2, Rev. 0, December 31, 2003, Bechtel National, Inc., Richland, Washington.

15. 24590-101-TSA-W000-0009-153-00001, Rev. 00A, *Final Report - High-Level Waste Melter Alternate Bubbler Configuration Testing*, June 29, 2004. Bechtel National, Inc., Richland, Washington.

16. 24590-101-TSA-W000-0009-162-00001, Rev00A, *Investigation of Glass Bubbling and Increased Production Rate (Proprietary Data)*, October 28, 2004, Bechtel National, Inc., Richland, Washington.

17. 24590-101-TSA-W000-0009-166-00001, Rev. 00B, *Regulatory Offgas Emissions Testing on the DM1200 Melter System Using HLW and LAW Simulants*, VSL-05R5830-1, Rev. 0, November 11, 2005, Bechtel National, Inc., Richland, Washington.

18. 24590-101-TSA-W000-0009-168-00001, Rev. B , *Comparison of HLW Simulant, Actual Waste, and Melter Glasses*, VSL-05R5760-1, Rev. 0, December 2, 2005, Bechtel National, Inc., Richland, Washington.

19. 24590-101-TSA-W000-0009-171-00001, Rev. 00A, *Summary of DM1200 Operation at VSL*, VSL-06R6710-2, Rev. 0, October 10, 2006. Bechtel National, Inc., Richland, Washington.

20. 24590-101-TSA-W000-0009-172-00001, Rev. 00A, *Review of Properties of Simulated Feeds Used for Melter Testing*, VSL-06R6410-1, Rev. 0, September 26, 2006, Bechtel National, Inc., Richland, Washington.

21. 24590-101-TSA-W000-0009-174-00001, Rev. 00A. *Summary of DM1200 WESP History and Performance,* VSL-06R6710-1, Rev. 0, August 7, 2006, Bechtel National, Inc., Richland, Washington.

22. 24590-101-TSA-W000-0009-23-10, Rev. 00C, *RPP-WTP Pilot Melter Bubbler Life Extension Test Results Report*, TRR-PLT-061, Rev. 0, January 7, 2004, Bechtel National, Inc., Richland, Washington.

23. 24590-101-TSA-W000-0009-34-03, Rev. 00C, *Final Report, Tests on the DuraMelter 1200 HLW Pilot Melter System Using AZ-101 HLW Simulants*, July 31, 2003, Bechtel National, Inc., Richland, Washington.

24. 24590-101-TSA-W000-0009-54-00001, Rev. 00C, *Final Report - Submerged Bed Scrubber (SBS): Off-line Component Testing of DM1200 SBS Unit*, VSL-01R2200-1, Rev. 1, August 30, 2004, Bechtel National, Inc., Richland, Washington.

25. 24590-101-TSA-W000-0009-74-01, Rev. 00D, *Final Report, Start-Up and Commissioning Tests on the DuraMelter 1200 HLW Pilot Plant Melter System Using AZ-101 HL Simulants*, Rev. 1, August 29, 2005, Bechtel National, Inc., Richland, Washington.

26. 24590-101-TSA-W000-0009-87-09, Rev. 00B, *Off-line Tests of the DM1200 Thermal Catalytic Oxidation (TCO) Unit*, VSL-02R8200-1, Rev. 0, April 17, 2003, Bechtel National, Inc., Richland, Washington.

27. 24590-101-TSA-W000-0009-97-00003, Rev. 00A. *Regulatory Offgas Emissions Testing on the DM1200 Melter System Using HLW Simulants: Data Summary Report*, VSL05S.5830-1, February 28, 2005, Bechtel National, Inc., Richland, Washington.

28. 24590-101-TSA-W000-004-172-00001, Rev00A, *Technical Basis For HLW Vitrification Stream Physical and Rheological Property Bounding Conditions*, January 2006, Bechtel National, Inc., Richland, Washington.

29. 24590-101-TSA-W000-009-172-00001, Rev. 0, *Review of Properties of Simulated Feeds Used for Melter Testing,* August 16, 2006, Bechtel National, Inc., Richland, Washington.

30. 24590-101-TSA-W000-009-48-00001, *Duramelter 100 Tests with AZ-101 HLW Simulant Using a DuraMelter 100 Vitrification System*. VSL-01R10N0-1, Rev. 1, February 25, 2002, Bechtel National, Inc., Richland, Washington.

31. 24590-101-TSA-W000-009-98-00011, Rev. 00A , *Preparation and Testing of HLW Matrix Glasses to Support Development of WTP Phase 2 Property- Composition Models*, September 26, 2006, Bechtel National, Inc., Richland, Washington.

32. 24590-CM-TSA-HXYG.0008, *Technical Basis for River Protection Project Waste Treatment Plant (RPP-WTP)-Power Fluidics System Design*, August 6, 2001, BNFL.

33. 24590-HLW-3YD-HFP-00001, *System Description for HLW Concentrate Receipt and Melter Feed Process Systems (HCP and HPP)*, December 22, 2004, Bechtel National, Inc., Richland, Washington.

34. 24590-HLW-3YD-HMP-00001, Rev. 2, *System Description For The HLW Melter Process System (HMP)*, May 2006, Bechtel National, Inc., Richland, Washington.

35. 24590-HLW-3YD-HOP-00001, *System Description for HLW Melter Offgas Treatment Process and Process Vessel Vent Extraction (HOP and PVV Systems)*, November 14, 2002, Bechtel National, Inc., Richland, Washington.

36. 24590-HLW-3YD-HPH-00001, *HLW Container Pour Handling System*, February 3, 2005, Bechtel National, Inc., Richland Washington.

37. 24590-HLW-3YD-RLD-00001, Rev. 1.0, *System Description for HLW Radioactive Liquid Waste Disposal (System RLD)*, May 18, 2005, Bechtel National, Inc., Richland, Washington.

38. 24590-HLW-N1D-HOP-00002, Rev. 2, *WESP Corrosion Evaluation*, December 22, 2005, Bechtel National, Inc., Richland, Washington.

39. 24590-HLW-RPT-M-03-004, Rev. 0, *CFD Modeling Report for WTP Vessel; RLD-VSL-00007*, August 22, 2003, Bechtel National, Inc., Richland, Washington.

40. 24590-HLW-RPT-M-03-005, Rev. 0, *CFD Modeling Report for WTP Vessel; RLD-VSL-00008*, August 22, 2003, Bechtel National, Inc., Richland, Washington.

41. 24590-HLW-RPT-RT-01-003, Rev. 0, *Research & Technology Recommendation on the Requirement of Bubblers in the HLW Melter*, March 16, 2002, Bechtel National, Inc., Richland, Washington.

42. 24590-PTF-TSP-RT-06-007, Rev. 0, *Scaled Testing to Determine the Adequacy of the WTP Pulse Jet Mixer Designs*, January 16, 2007, Bechtel National, Inc., Richland, Washington.

43. 24590-QL-POA-MFAO-00001-10-00001, Rev. 00B, *Rotating Mechanical Agitators Test Report*, March 17, 2004, Prepared by Philadelphia Mixers for Bechtel National, Inc., Richland, Washington.

44. 24590-WTP-3YD-50-00003, Rev. A. *System Description for Pulse Jet Mixers and Supplemental Mixing Systems*, May 19, 2004, Bechtel National, Inc., Richland, Washington.

45. 24590-WTP-DB-ENG-01-001, Rev. 1C, *WTP Basis of Design*, November 1, 2006, Bechtel National, Inc., Richland, Washington.

46. 24590-WTP-GPG-M-047, Rev. 2.0, *Preparation of Corrosion Evaluations*, Bechtel National, Inc., Richland, Washington.

47. 24590-WTP-PL-ENG-06-0013, Rev. 000, *Issue Response Plan for Implementation of External Flowsheet Review Team (EFRT) Recommendations-M3, Inadequate Mixing System Design*, August 8, 2006, Bechtel National, Inc., Richland, Washington.

48. 24590-WTP-PSAR-ESH-01-002-04, Rev. 1, *Preliminary Safety Analysis Report to Support Construction Authorization; HLW Facility,* December 22, 2006, Bechtel National, Inc., Richland, Washington.

49. 24590-WTP-PSAR-ESH-01-002-04, Rev. 2b, *Preliminary Safety Analysis Report to Support Construction Authorization; HLW Facility*, February 16, 2007, Bechtel National, Inc., Richland, Washington.

50. 24590-WTP-RPT-ENG-01-013. *Mercury Abatement Technology Assessment for the WTP*, December 14, 2001, Bechtel National, Inc., Richland, Washington.

51. 24590-WTP-RPT-ENV-03-00005, Rev. 0, *4-9s Destruction and Removal Efficiency Assessment*, November 20, 2003, Bechtel National, Inc., Richland, Washington.

52. 24590-WTP-RPT-PR-07-003, Rev. 0, *Pulse Jet Mixer (PJM) Mixing Test Performance Criteria*, February 2, 2007. Bechtel National, Inc., Richland, Washington.

53. 24590-WTP-TSP-RT-01-004, *Development of Simulants to Support Mixing Tests for High Level Waste and Low Activity Waste*, November 12, 2002, Bechtel National, Inc., Richland, Washington.

54. CCN:033010, "Determine Path Forward for Safe Operation of Carbon Absorption Beds," May 1, 2002, Bechtel National Inc., Richland, Washington.

55. CCN:080128, Letter, from R. J. Schepens, DOE ORP, to M. A. Wilson, Washington Department of Ecology, "Request for Concurrence with Principal Organic Dangerous Constituents (PODCs) for Demonstrating a 99.99 Percent Organic Destruction and Removal Efficiency (DRE), 03-AMWTP-164," December 17, 2003, Bechtel National, Inc., Richland, Washington.

56. CCN:091869, "HLW-WESP Internals and 40 Year Lifespan." May 27, 2004, Bechtel National, Inc., Richland, Washington.

57. CCN:119800, "FW:ABAR 24590-WTP-SE-ENS-04-090 Erosion Information," May 25, 2005, Bechtel National, Inc., Richland, Washington.

58. CCN:128559, "White paper on the Analysis of Naphthalene Destruction and Removal Efficiency (DRE) Testing at the Vitreous State Laboratory (VSL)," December 15, 2005, Bechtel National, Inc., Richland, Washington.

59. CCN:132846, "Report of External Flowsheet Review Team for the Hanford Waste Treatment and Immobilization Plant-Final Report Titled: 'Comprehensive Review of the Hanford Waste Treatment Plant Flowsheet and Throughput'," March 17, 2006, Bechtel National, Inc., Richland, Washington.

60. CCN:142012, "EFRT M17: "HLW Film Cooler Plugging," July 17, 2006, Bechtel National, Inc., Richland, Washington.

61. CCN:144619, "EFRT M17: Evaluation of HLW Film Cooler Blockage Issues," December 22, 2006, Bechtel National, Inc., Richland, Washington.

62. CCN:150383, "Path Forward for EFRT Mixing Issue M3," January 11, 2007, Bechtel National, Inc., Richland, Washington.

63. DMP-4145-FTR-003, *HLW WESP Functional Test Report*, June 2006, prepared by DMP for Bechtel National, Inc., Richland, Washington.

64. DoD 2004, *Acquisition System Guidebook*, DODI 5000.2, U.S. Department of Defense, November 17, 2004.

65. DoD 2005, *Technology Readiness Assessment (TRA) Deskbook*, Department of Defense, prepared by the Deputy Undersecretary of Defense for Science and Technology, May 2005.

66. FMP 064, *Jet Solid Suspension Design Guide*, October 2005, BHR Group Limited, Bedfordshire, U.K.

67. GAO/NSIAD-99-162, *Best Practices: Better Management of Technology Can Improve Weapon System Outcomes*, July 1999, United States General Accounting Office.

68. Nolte, William L., et al., *Technology Readiness Level Calculator*, Air Force Research Laboratory, presented at the National Defense Industrial Association Systems Engineering Conference, October 20, 2003.

69. NUREG/CR-6826/ANL-03/22. *Fracture Toughness and Crack Growth Rates of Irradiated Austenitic Stainless Steels*, August 2003, Argonne National Laboratory, Argonne, Illinois.

70. Phull, B.S., W.L. Mathay, and R.W. Ross, 2000, "Corrosion Resistance of Duplex and 4-6% Mo-Containing Stainless Steels in FGD Scrubber Absorber Slurry Environments," presented at Corrosion 2000, Orlando, Florida, March 26-31, 2000, NACE International, Houston, Texas.

71. SCT-M0SRLE60-00-110-00023, Rev. 00A, *Tank 241-AY-102 Simulant Development, Ultrafiltration, and Washing, WSRC-TR-2003-00547*, Rev. 0, March 31, 2004, Bechtel National, Inc., Richland, Washington.

72. SCT-M0SRLE60-00-132-05, Rev. 00C, *Pilot Scale Testing - Transport of HLW Glass Former Chemicals Proof of Principle Test Results (U)*, April 10, 2003, Bechtel National, Inc., Richland, Washington.

73. SCT-M0SRLE60-00-187-02, Rev. 00C (cleared)), *Evaluation of Wetting Agents to Mitigate Dusting of Glass Forming Chemicals During Delivery to the Melter Feed Preparation Vessel (U),* WSRC-TR-2003-00209, July 31, 2003, Bechtel National, Inc., Richland, Washington.

74. SCT-M0SRLE60-00-193-00004, Rev. 00A, *Hanford HLW AY-102/C106 Pretreated Sludge Physical and Chemical Properties Prior to Melter Feed Processing (U)*, WSRC-TR-2004-00394, Bechtel National, Inc., Richland, Washington.

75. SCT-M0SRLE60-00-195-00001, Rev. 00A, *Interim Report: RPP-WTP Semi-Integrated Pilot Plant – Campaign 1*, WSRC-TR-2004-00201, Rev. 0, May 18, 2004, Bechtel National, Inc., Richland, Washington.

76. SCT-M0SRLE60-00-21-05, Rev. 00B, *Crucible Scale Vitrification of Pretreated C-106 Sludge Mixed with Secondary Wastes*, WSRC-TR-2001-00252, August 8, 2002, Bechtel National, Inc., Richland, Washington.

77. SCT-M0SRLE60-00-211-00001, Rev. 00A, *Physical Characterization of Vitreous State Laboratory AY102/C106 and AZ-102 High Level Waste Melter Feed Simulants (U)*, WSRC-TR-2005-00035, Rev. 0, March 31, 2005, Bechtel National, Inc., Richland, Washington.

78. SCT-M0SRLE60-00-218-00001, Rev. 0A, "*Vitrification and Product Testing of AY-102/C-106 HLW (Env D)*, WSRC-TR-2005-00410, Rev. 0," November 2005, Bechtel National, Inc., Richland, Washington.

79. SCT-M0SRLE60-00-83-01A, *Physical Characterization for Hanford Tank Waste Samples AN-102, AN-103, and AZ-102*, WSRC-TR-2000-00352, June 6, 2002, Bechtel National, Inc., Richland, Washington.

80. VSL-05L5290-2, *Letter Report: Off-Line DM1200 Slipstream Carbon Column Scoping Tests*, Vitreous State Laboratory of the Catholic University of America, Washington, D.C. (This document is included as Appendix III of VSL-05R5830-1).

81. VSL-06T1000-1, *Test Plan Pretreated Waste and Melter Feed Composition Variability Testing Using HLW and LAW Simulants*, September 29, 2006, Vitreous State Laboratory of the Catholic University of America, Washington, D.C.

Appendix A – Determination of Critical Technology Elements

Appendix A – Determination of Critical Technology Elements

The working definition of the Critical Technology Element (CTE) as defined in the *Department of Defense, Technology Readiness Assessment Deskbook*[1] (2005) was used as a basis for identification of CTEs for the Waste Treatment and Immobilization Plant (WTP). The working definition is as follows:

> "A technology element is "critical" if the system being acquired depends on the technology element to meet operational requirements (with acceptable development, cost, and schedule and with acceptable production and operations costs) and if the technology element or its application is either new or novel.
>
> Said another way, an element that is new or novel or being used in a new or novel way is critical if it is necessary to achieve the successful development of a system, its acquisition, or its operational utility."

The WTP Project is divided into five project elements:

- Analytical Laboratory (LAB)Facility
- Balance of Facilities (BOF)
- Low-Activity Waste (LAW) Vitrification Facility
- High-Level Waste (HLW) Vitrification Facility
- Pretreatment (PT) Facility

Within each project, the specific design features of the facility are divided into "systems." Thus for convenience, the identification of the CTEs was done on a system basis. Most systems within the WTP Facility are unique to the five project elements identified above. However, the Pulse Jet Mixer (PJM) system is common to several treatment facilities including the Radioactive Liquid Waste Disposal System (RLD). Therefore, the PJM system was allocated to the RLD project element.

Determination of CTEs

The process for identification of the CTEs for the HLW facilities involved two steps:

1. An initial screening of the complete list of systems for HLW for those that have a potential to be a CTE. In this assessment, systems that are directly involved in the processing of the tank waste, or handling of the primary products (immobilized low-activity waste) and secondary wastes, are initially identified as potential CTEs. The complete list of systems and those identified as potential CTEs are listed in Table A.1. This initial assessment was completed by the Assessment Team (see Appendix D).
2. A final screening of the potential CTEs was completed to determine the final set of CTEs for evaluation. This was completed by assessing the initial systems against two set of questions as presented in Table A.2. A CTE is determined if there is a positive response to at least one of the questions, in each of the question sets identified in Table A.2. This final assessment of the CTEs was completed jointly by the Assessment Team and the WTP Project Technology and Engineering staff.

The specific responses to each of the questions for each potential CTE are provided in Table A.3.

The rationale for the selection of each of the systems as a CTE is summarized below.

[1] Department of Defense, *Technology Readiness Assessment (TRA) Deskbook*, May 2005, prepared by the Deputy Undersecretary of Defense for Science and Technology (DUSD(S&T))

HLW Melter Feed Process System (HFP)
The purpose of the HFP is to prepare the HLW meter feed by blending treated high-level waste (HLW) and glass-forming chemicals. The components are commercially available but have been repackaged for a remote environment. Application of the final system configuration in a remote environment is unique. Integrated testing has not been completed in a remote environment for the entire range of waste feeds expected at the WTP from pretreatment. During testing with the DM3300 melter, dry glass-forming chemicals were added to a feed simulants. There was no attempt to wet the glass formers. Wetted chemicals are added to the melter, and the addition of glass formers using wetted powders is unique.

HLW Melter Process (HMP)
The WTP melter is most similar to the West Valley Demonstration Project (WVDP) melter in that both melters use similar "air lift" glass discharge systems. However, the WTP melter has a glass pool surface are of 3.7 m^2, which is larger than the WVDP (2.2 m^2) and Savannah River Defense Waste Processing Facility (DWPF) (2.6 m^2) melters. In addition, some of the equipment components used in the melter, such as the bubblers and multiple-feed nozzles, are unique to this process system. Issues have been identified with glass composition, bubbler life, bubbler configuration, and noble metals settling in the melter. Testing at the Vitreous State Laboratory of the Catholic University of America (VSL) is much more limited than what was done with low-activity waste (LAW). VSL testing was augmented by physical modeling to estimate melter requirements. There may be an overestimation of production capability as a result.

HLW Melter Offgas Treatment Process System and Process Vessel Vent Exhaust System (HOP/PVV)
The specific subcomponents that comprise the HLW melter offgas system are a combination of unique WTP designs (e.g., film cooler, submerged bed scrubber [SBS]) and vendor-designed, commercially available equipment (e.g., high-efficiency mist eliminator [HEME], wet electrostatic precipitator [WESP], mercury (Hg) catalyst skid, and organic destruction catalyst skid). Issues were identified during Research and Technology (R&T) testing with film cooler blockage due to splashing of the glass onto the louvers of the film cooler at high bubbling rates and the lack of an effective cleaner for the film cooler. The SBS required design modifications to address solids accumulation leading to an unacceptable pressure drop in the downcomers. The WESP includes design modifications to maintain the decontamination factor (DF) and premature failure of internals. The technology has never been used in a radioactive environment. It is a permanently designed vessel inside the WTP. The electrodes and connectors replaceable, but the remaining components of the WESP have not been designed for routine maintenance. Proof is needed that application of the WESP in the radioactive environment does not exceed the currently demonstrated capability for WESP equipment lifetime.

Pulse Jet Mixers (PJM) and Supplemental Mixing Systems
PJMs are used within the WTP to dissipate gases, blend liquids, and suspend solids for sampling and transport. The PJM system is identical the system used at the Sellafield site, U.K. PJMs have been shown to adequately mix non-Newtonian fluids. For Newtonian fluids, there may not be enough power to suspend the solids and keep them from settling on the bottom.

Radioactive Liquid Waste Disposal System (RLD)
The RLD handles liquid waste for interim storage before being transferred to the effluent system. The RLD is located in the high-contamination/high-radiation zone of the WTP; entry into the zone will not be possible once hot production begins. There are static areas with PJMs when the vessels are full. Furthermore, the RLD has a 40-year design life requirement for the WTP. The system is based on the design at the Sellafield site, but the vessels at Sellafield were replaceable.

The following systems were not considered critical systems, because they do not use new, novel, modified, or repackaged technology: HLW Canister Decontamination Handling System (HDH) and

HLW Canister Export Handling System (HEH) because the processes are similar to those used at WVDP and the Sellafield site. Similarly, the HLW Mechanical Handling System (HMH), HLW System Canister Receipt Handling (HRH), and HLW Canister Pour Handling System (HPH) are almost identical to WVDP.

Table A.1. Identification of Critical Technology Elements (Systems) in the HLW Facility

System Locators	System Title	Document number	Include in Initial CTE Evaluation?
AFR,NAR,SHR,ANR,SPR,STR	HLW Reagents	24590-HLW-3YD-30-00001	No
ARV,C1V,C2V,C3V,C5V	Cascade Ventilation System	24590-HLW-3YD-30-00002	No
BSA	Breathing Service Air	24590-HLW-3YD-BSA-00001	No
C1V	Cascade Ventilation System	24590-HLW-3YD-C1V-00001	No
C2V	Cascade Ventilation System	24590-HLW-3YD-C2V-00001	No
C3V	Cascade Ventilation System	24590-HLW-3YD-C3V-00002	No
C3V	Cascade Ventilation System	24590-HLW-3YD-C3V-00001	No
C5V	Cascade Ventilation System	24590-HLW-3YD-C5V-00001	No
CHW	Chilled Water	24590-HLW-3YD-CHW-00001	No
DOW	Domestic Water System	24590-HLW-3YD-DOW-00001	No
HFP	HLW Melter Feed Process	24590-HLW-3YD-HFP-00001	Yes
HDH	Canister Decontamination Handling	24590-HLW-3YD-HDH-00002	Yes
HEH	HLW Canister Export Handling	24590-HLW-3YD-HEH-00001	Yes
HFH	HLW Melter Feed Process	24590-HLW-3YD-HFH-00002	Yes
HFH	HLW Melter Feed Process	24590-HLW-3YD-HFH-00001	Yes
HMH	HLW Melter Handling	24590-HLW-3YD-HMH-00001	Yes
HMP	HLW Melter Process	24590-HLW-3YD-HMP-00001	Yes
HOP/PVV	Melter Offgas Treatment Process	24590-HLW-3YD-HOP-00001	Yes
HPH	HLW Canister Pour Handling	24590-HLW-3YD-HPH-00001	Yes
HPS	High Pressure Steam	24590-HLW-3YD-HPS-00001	No
HRH	HLW Melter Cave Support Handling	24590-HLW-3YD-HRH-00001	Yes
HSH	HLW Melter Cave Support Handling	24590-HLW-3YD-HSH-00001	Yes
ISA	Instrument Service Air	24590-HLW-3YD-ISA-00001	No
LPS	Low Pressure Steam	24590-HLW-3YD-LPS-xxxxx*	No
LTE	Cave Lighting	24590-HLW-3YD-LTE-00001	No
NLD	Non-radioactive Liquid Waste	24590-HLW-3YD-NLD-00001	No
PJV	Pulse Jet Ventilation	24590-HLW-3YD-PJV-00001	No
PWD	Plant Wash and Disposal	24590-HLW-3YD-PWD-00001	No
RLD	Radioactive Liquid Waste	24590-HLW-3YD-RLD-00001	No
SCW	Steam Condensate Water	24590-HLW-3YD-SCW-xxxxx*	No

Table A.2. Questions used to Determine the Critical Technology Element for the HLW Technology Readiness Level Assessment

First Set	1. Does the technology directly impact a functional requirement of the process or facility? 2. Do limitations in the understanding of the technology result in a potential schedule risk; i.e., the technology may not be ready for insertion when required? 3. Do limitations in the understanding of the technology result in a potential cost risk; i.e., the technology may cause significant cost overruns? 4. Are there uncertainties in the definition of the end state requirements for this technology?
Second Set	1. Is the technology (system) new or novel? 2. Is the technology (system) modified? 3. Has the technology been repackaged so that a new relevant environment is realized? 4. Is the technology expected to operate in an environment and/or achieve a performance beyond its original design intention or demonstrated capability?

Table A.3. Summary of Question Responses for the LAB/BOF/LAW Systems that were determined to be Critical Technology Elements

Critical Technology Evaluation Questions	HDH	HEH	HFP	HMH	HMP	HOP/ PVV	HPH	HRH	HSH	PJM	PJV	RLD
Critical Technology Element?	No	No	Yes	No	Yes	Yes	No	No	No	Yes	No	Yes
First Set	Yes	Yes	Yes	Yes	Yes	Yes	Yes	Yes	Yes	Yes	Yes	Yes
Does the technology directly impact a functional requirement?	Y	Y	Y	Y	Y	Y	Y	Y	Y	Y	Y	Y
Do limitations in the understanding of the technology result in a potential schedule risk; i.e., the technology may not be ready for insertion when required?	N	N	N	N	N	N	N	N	N	N	N	N
Do limitations in the understanding of the technology result in a potential cost risk, i.e., the technology may cause significant cost overruns	N	N	N	N	N	N	N	N	N	N	N	N
Are there uncertainties in the definition of the end state requirements for this technology ?	N	N	N	N	N	N	N	N	N	N	N	N
Second Set	No	No	Yes	No	Yes	Yes	No	No	No	Yes	No	Yes
Is the technology new or novel?	N	N	N	N	N	Y	N	N	N	N	N	N
Is the technology modified?	N	N	N	N	N	Y	N	N	N	N	N	N
Has the technology been repackaged so that a new relevant environment is realized?	N	N	Y	N	Y	Y	N	N	N	N	N	Y
Is the technology expected to operate in an environment and/or achieve a performance beyond its original design intention or demonstrated capability?	N	N	Y	N	Y	Y	N	N	N	Y	N	Y

Appendix B – Technology Readiness Level Calculator as Modified for DOE Office of Environmental Management

Appendix B – Technology Readiness Level Calculator as Modified for DOE Office of Environmental Management

Appendix B presents the questions used for assessing the technology maturity of U.S. Department of Energy (DOE) Office of Environmental and Radioactive Waste Management (EM) waste processing and treatment technologies using a modified version of the U.S. Air Force Research Laboratory (AFRL) Technology Readiness Level (TRL) Calculator (Nolte et al. 2003). The following TRL questions were developed for the evaluation of the Waste Treatment and Immobilization Plant (WTP) Analytical Laboratory (LAB), Balance of Facilities (BOF), and Low-Activity Waste (LAW) Facility, and applied to High-Level Waste (HLW) Facility systems in their respective tables as identified below.

- Table B.1 for TRL 1
- Table B.2 for TRL 2
- Table B.3 for TRL 3
- Table B.4 for TRL 4
- Table B.5 for TRL 5
- Table B.6 for TRL 6

The TRL Calculator developed by the U.S. AFRL is available online by searching at the "Defense Acquisition University."

The U.S. General Accounting Office (GAO) (1999) recommended that the U.S. Department of Defense (DoD) assess technology readiness prior to entering the next stage of development. The recommended minimum maturity for a technology to be included in an acquisition was TRL 6 (prototype demonstration in a relevant environment). TRL 7 (system prototype demonstration in an operational environment) was preferred. The DoD has developed detailed guidance for using TRLs (DOD *Technology Readiness Assessment Deskbook,* 2005*).*

The DOE EM version of the TRL Calculator includes a standard set of questions at each technology readiness level implemented in Microsoft Excel™. The questions in the original calculator were for DoD weapons systems, so the questions were modified for EM use. The modified questions shown in Tables B.1 to B.6 reflect the technology development for waste processing technologies. The questions were reviewed by Mr. Nolte (developer of the TRL Calculator) to assure that the maturity levels did not change as a result of changing the words.

The goal of using the modified TRL Calculator was to assess whether the critical technology elements (CTE) in the WTP were ready to proceed with design and construction. Prior to initiating the process, the review was initiated using top-level questions. The expected TRL was determined from the question with the first "yes" answer from the list in Figure B.1. Many of the HLW Facility systems did not meet TRL 6. Therefore, the process started using the questions at either TRL 4 or TRL 5 to assure that the prior level of readiness was achieved before evaluating the expected level of technology readiness.

If Yes, Then Logic		Top Level Question
TRL 9	→	Has the actual equipment/process successfully operated in the full operational environment (Hot Operations)?
TRL 8	→	Has the actual equipment/process successfully operated in a limited operational environment (Hot Commissioning)?
TRL 7	→	Has the actual equipment/process successfully operated in the relevant operational environment (Cold Commissioning)?
TRL 6	→	Has prototypical engineering scale equipment/process testing been demonstrated in a relevant environment?
TRL 5	→	Has bench scale equipment/process testing been demonstrated in a relevant environment?
TRL 4	→	Has laboratory scale testing of similar equipment systems been completed in a simulated environment?
TRL 3	→	Has equipment and process analysis and proof of concept been demonstrated in a simulated environment?
TRL 2	→	Has an equipment and process concept been formulated?
TRL 1	→	Have the basic process technology process principles been observed and reported?

Figure B.1. Top Level Questions Establish Expected Technology Readiness Level

By answering the questions in the TRL calculator for the expected TRL, the calculator provided a standardized, repeatable process for evaluating the maturity of any hardware or software technology under development. The first columns of Tables B.1 to B.6 identify whether the question applies to hardware (H), software (S) or both. The second columns of Tables B.1 to B.6 identify the areas of readiness being evaluated: technical (T), programmatic (P), and manufacturing/quality requirements (M). To complete the TRL, column 3 had to be 100% complete for all questions in the table.

Appendix C summarizes expected state of readiness assessed using the TRL Calculator questions in Tables B.5 and B.6 for the HLW Facility systems. While questions for TRL 4 may have been evaluated, only the responses to the hardware questions for TRLs 5 and 6 are shown in Appendix C.

Table B.1. Technology Readiness Level 1 Questions

H/S/ Both	Cat	% Complete	Criteria
B	T		"Back of envelope" environment
B	T		Physical laws and assumptions used in new technologies defined
S	T		Have some concept in mind for software that may be realizable in software
S	T		Know what software needs to do in general terms
B	T		Paper studies confirm basic principles
S	T		Mathematical formulations of concepts that might be realizable in software
S	T		Have an idea that captures the basic principles of a possible algorithm
B	P		Initial scientific observations reported in journals/conference proceedings/technical reports
B	T		Basic scientific principles observed
B	P		Know who cares about the technology; e.g., sponsor, money source
B	T		Research hypothesis formulated
B	P		Know who will perform research and where it will be done

H-Hardware element, contains no appreciable amount of software
S-Completely a Software system
B-Some Hardware and Software

T-Technology, technical aspects
M-Manufacturing and quality
P-Programmatic, customer focus, documentation

Table B.2. Technology Readiness Level 2 Questions

H/S/ Both	Cat	% Complete	Criteria
B	P		Customer identified
B	T		Potential system or components have been identified
B	T		Paper studies show that application is feasible
B	P		Know what program the technology will support
B	T		An apparent theoretical or empirical design solution identified
H			Basic elements of technology have been identified
B	T		Desktop environment
H	T		Components of technology have been partially characterized
H	T		Performance predictions made for each element
B	P		Customer expresses interest in the application
S	T		Some coding to confirm basic principles
B	T		Initial analysis shows what major functions need to be done
H	T		Modeling and simulation only used to verify physical principles
B	P		System architecture defined in terms of major functions to be performed
S	T		Experiments performed with synthetic data
B	P		Requirements tracking system defined to manage requirements creep
B	T		Rigorous analytical studies confirm basic principles
B	P		Analytical studies reported in scientific journals/conference proceedings/technical reports
B	T		Individual parts of the technology work (no real attempt at integration)
S	T		Know what hardware software will be hosted on
B	T		Know what output devices are available
B	P		Preliminary strategy to obtain TRL 6 developed (e.g., scope, schedule, cost)
B	P		Know capabilities and limitations of researchers and research facilities
B	T		Know what experiments are required (research approach)
B	P		Qualitative idea of risk areas (cost, schedule, performance)

H-Hardware element, contains no appreciable amount of software
S-Completely a Software system
B-Some Hardware and Software

T-Technology, technical aspects
M-Manufacturing and quality
P-Programmatic, customer focus, documentation

Table B.3. Technology Readiness Level 3 Questions

Both	Cat	% Complete	Criteria
B	T		Academic environment
H	T		Predictions of elements of technology capability validated by analytical studies
B	P		The basic science has been validated at the laboratory scale
H	T		Science known to extent that mathematical and/or computer models and simulations are possible
B	P		Preliminary system performance characteristics and measures have been identified and estimated
S	T		Outline of software algorithms available
H	T		Predictions of elements of technology capability validated by modeling and simulation (M&S)
S	T		Preliminary coding verifies that software can satisfy an operational need
H	M		No system components, just basic laboratory research equipment to verify physical principles
B	T		Laboratory experiments verify feasibility of application
H	T		Predictions of elements of technology capability validated by laboratory experiments
B	P		Customer representative identified to work with development team
B	P		Customer participates in requirements generation
B	T		Cross technology effects (if any) have begun to be identified
H	M		Design techniques have been identified/developed
B	T		Paper studies indicate that system components ought to work together
B	P		Customer identifies transition window(s) of opportunity
B	T		Performance metrics for the system are established
B	P		Scaling studies have been started
S	T		Experiments carried out with small representative data sets
S	T		Algorithms run on surrogate processor in a laboratory environment
H	M		Current manufacturability concepts assessed
S	T		Know what software is presently available that does similar task (100% = inventory completed)
S	T		Existing software examined for possible reuse
H	M		Sources of key components for laboratory testing identified
S	T		Know limitations of presently available software (analysis of current software completed)
B	T		Scientific feasibility fully demonstrated
B	T		Analysis of present state of the art shows that technology fills a need
B	P		Risk areas identified in general terms
B	P		Risk mitigation strategies identified
B	P		Rudimentary best value analysis performed for operations
B	P		Individual system components have been tested at laboratory scale

H-Hardware element, contains no appreciable amount of software
S-Completely a Software system
B-Some Hardware and Software

T-Technology, technical aspects
M-Manufacturing and quality
P-Programmatic, customer focus, documentation

Table B.4. Technology Readiness Level 4 Questions

H/S/ Both	Cat	% Complete	Criteria
B	T		Cross technology issues (if any) have been fully identified
H	M		Laboratory components tested are surrogates for system components
H	T		Individual components tested in laboratory/by supplier (contractor's component acceptance testing)
B	T		Subsystems composed of multiple components tested at lab scale using simulants
H	T		Modeling and simulation used to simulate some components and interfaces between components
S	T		Formal system architecture development begins
B	P		Overall system requirements for end user's application are documented
B	P		System performance metrics measuring requirements have been established
S	T		Analysis provides detailed knowledge of specific functions software needs to perform
B	P		Laboratory testing requirements derived from system requirements are established
H	M		Available components assembled into laboratory scale system
H	T		Laboratory experiments with available components show that they work together (lab kludge)
S	T		Requirements for each system function established
S	T		Algorithms converted to pseudocode
S	T		Analysis of data requirements and formats completed
S	T		Stand-alone modules follow preliminary system architecture plan
H	T		Analysis completed to establish component compatibility
S	M		Designs verified through formal inspection process
B	P		Science and technology exit criteria established
B	T		Technology demonstrates basic functionality in simulated environment
S	P		Able to estimate software program size in lines of code and/or function points
H	M		Scalable technology prototypes have been produced
B	P		Draft conceptual designs have been documented
H	M		Equipment scaleup relationships are understood/accounted for in technology development program
B	T		Controlled laboratory environment used in testing
B	P		Initial cost drivers identified
S	T		Experiments with full scale problems and representative data sets
B	M		Integration studies have been started
B	P		Formal risk management program initiated
S	T		Individual functions or modules demonstrated in a laboratory environment
H	M		Key manufacturing processes for equipment systems identified
B	P		Scaling documents and designs of technology have been completed
S	T		Some ad hoc integration of functions or modules demonstrates that they will work together
H	M		Key manufacturing processes assessed in laboratory
B	P		Functional work breakdown structure developed (functions established)
B	T		Low-fidelity technology “system” integration and engineering completed in a lab environment
H	M		Mitigation strategies identified to address manufacturability/producibility shortfalls
B	P		Technology availability dates established

H-Hardware element, contains no appreciable amount of software
S-Completely a Software system
B-Some Hardware and Software
T-Technology, technical aspects
M-Manufacturing and quality
P-Programmatic, customer focus, documentation

Table B.5. Technology Readiness Level 5 Questions

H/S/ Both	Cat	% Complete	Criteria
B	T		Cross technology effects (if any) have been fully identified (e.g., system internally consistent)
B	T		Plant size components available for testing
B	T		System interface requirements known (how will system be integrated into the plant?)
B	P		System requirements flow down through work breakdown structure (design engineering begins)
S	T		System software architecture established
B	T		Requirements for technology verification established
S	T		External process/equipment interfaces described as to source, structure, and requirements
S	T		Analysis of internal system interface requirements completed
B	T		Lab scale similar system tested with limited range of actual wastes, if applicable
B	T		Interfaces between components/subsystems in testing are realistic (benchtop with realistic interfaces)
H	M		Significant engineering and design changes
S	T		Coding of individual functions/modules completed
H	M		Prototypes of equipment system components have been created (know how to make equipment)
H	M		Tooling and machines demonstrated in lab for new manufacturing processes to make component
B	T		High-fidelity lab integration of system completed, ready for test in relevant environments
H	M		Design techniques have been defined to the point where largest problems defined
H	T		Lab-scale similar system tested with range of simulants
H	T		Fidelity of system mock-up improves from laboratory to benchscale testing
B	M		Reliability, Availability, Maintainability Index (RAMI) target levels identified
H	M		Some special purpose components combined with available laboratory components for testing
H	P		Three dimensional drawings and piping and instrumentation diagrams (P&ID) have been prepared
B	T		Laboratory environment for testing modified to approximate operational environment
B	T		Component integration issues and requirements identified
H	P		Detailed design drawings have been completed to support specification of pilot testing system
B	T		Requirements definition with performance thresholds and objectives established for final plant design
S	T		Algorithms run on processor with characteristics representative of target environment
B	P		Preliminary technology feasibility engineering report completed
B	T		Integration of modules/functions demonstrated in a laboratory/bench-scale environment
H	T		Formal control of all components to be used in final system
B	P		Configuration management plan in place
B	P		Risk management plan documented
S	T		Functions integrated into modules
S	T		Formal inspection of all modules to be used in the final design
S	T		Individual functions tested to verify that they work
S	T		Individual modules and functions tested for bugs
S	T		Integration of modules/functions demonstrated in a laboratory environment
S	P		Formal inspection of all modules/components completed as part of configuration management
H	P		Individual process and equipment functions tested to verify that they work (e.g., test reports)

H-Hardware element, contains no appreciable amount of software
S-Completely a Software system
B-Some Hardware and Software

T-Technology, technical aspects
M-Manufacturing and quality
P-Programmatic, customer focus, documentation

Table B.6. Technology Readiness Level 6 Questions

H/S/ Both	Cat	% Complete	Criteria
B	T		Performance and behavior of subcomponent interactions understood (including tradeoffs)
H	M		Reliability, Availability, Maintainability Index (RAMI) levels established
B	M		Frequent design changes occur
H	P		Draft design drawings for final plant system are nearly complete
B	T		Operating environment for final system known
B	P		Collection of actual maintainability, reliability, and supportability data has been started
B	P		Estimated cost of the system design is identified
B	T		Engineering scale similar system tested with a range of simulants
B	P		Plan for demonstration of prototypical equipment and process testing completed, results verify design
B	T		Modeling and simulation used to simulate system performance in an operational environment
H	T		Operating limits for components determined (from design, safety and environmental compliance)
B	P		Operational requirements document available
B	P		Off-normal operating responses determined for engineering scale system
B	T		System technical interfaces defined
B	T		Component integration demonstrated at an engineering scale
B	P		Scaling issues that remain are identified and supporting analysis is complete
B	P		Analysis of project timing ensures technology will be available when required
S	T		Analysis of database structures and interfaces completed
B	P		Have begun to establish an interface control process
B	P		Acquisition program milestones established for start of final design (CD-2)
H	M		Critical manufacturing processes prototyped
H	M		Most pre-production hardware is available to support fabrication of the system
B	T		Engineering feasibility fully demonstrated (e.g., will it work?)
S	T		Prototype implementation includes functionality to handle large scale realistic problems
S	T		Algorithms partially integrated with existing hardware/software systems
H	M		Materials, process, design, and integration methods have been employed (e.g., can design be produced?)
S	T		Individual modules tested to verify that the module components (functions) work together
B	P		Technology “system” design specification complete and ready for detailed design
H	M		Components are functionally compatible with operational system
H	T		Engineering scale system is high-fidelity functional prototype of operational system
S	T		Representative software system or prototype demonstrated in a laboratory environment
B	P		Formal configuration management program defined to control change process
B	M		Integration demonstrations have been completed (e.g., construction of testing system)
B	P		Final Technical Report on Technology completed
B	T		Waste processing issues have been identified and major ones have been resolved
S	T		Limited software documentation available
S	P		Verification, Validation, and Accreditation (VV&A) initiated
H	M		Process and tooling are mature to support fabrication of components/system
H	M		Production demonstrations are complete (at least one time)
S	T		"Alpha" version software has been released
S	T		Representative model tested in high-fidelity lab/simulated operational environment

H-Hardware element, contains no appreciable amount of software
S-Completely a Software system
B-Some Hardware and Software

T-Technology, technical aspects
M-Manufacturing and quality
P-Programmatic, customer focus, documentation

References

DoD 2005, *Technology Readiness Assessment (TRA) Deskbook*, Department of Defense, prepared by the Deputy Undersecretary of Defense for Science and Technology, May 2005.

GAO/NSIAD-99-162, *Best Practices: Better Management of Technology Can Improve Weapon System Outcomes*, July 1999, United States General Accounting Office.

Nolte, William L., et al., *Technology Readiness Level Calculator*, Air Force Research Laboratory, presented at the National Defense Industrial Association Systems Engineering Conference, October 20, 2003.

Appendix C – Technology Readiness Level Summary for WTP Critical Technology Elements for HLW Vitrification

Appendix C – Technology Readiness Level Summary for WTP Critical Technology Elements for HLW Vitrification

Appendix C summarizes the responses to the specific criteria identified in levels 5 and 6 of the Technology Readiness Level (TRL) Calculator (Appendix B) for systems identified as critical technology elements (CTE). The following systems were evaluated.

Table C.1 Technology Readiness Level 5 Summary for HLW Melter Feed Process System (HFP)

Table C.2 Technology Readiness Level 6 Summary for HLW Melter Feed Process System (HFP)

Table C.3 Technology Readiness Level 5 Summary for HMP Melter System (HMP)

Table C.4 Technology Readiness Level 6 Summary for HMP Melter System (HMP)

Table C.5 Technology Readiness Level 5 Summary for HLW Melter Offgas Treatment Process System and Process Vessel Vent Exhaust System (HOP/PVV)

Table C.6 Technology Readiness Level 6 Summary for HLW Melter Offgas Treatment Process System and Process Vessel Vent Exhaust System (HOP/PVV)

Table C.7 Technology Readiness Level 5 Summary for HLW Pulse Jet Mixer (PJM) System and Radioactive Liquid Waste Disposal System (RLD)

Table C.8 Technology Readiness Level 6 Summary for HLW Pulse Jet Mixer (PJM) System and Radioactive Liquid Waste Disposal System (RLD)

Table C.1. Technology Readiness Level 5 Summary for HLW Melter Feed Process System (HFP)

Criteria Satisfied (Y/N)	Criteria	Basis for Completion
Y	Cross technology effects (if any) have been fully identified (e.g., system internally consistent)	The mixing system design has been provided by the vendor. The mixing report from the vendor demonstrates the feasibility of the system design (24590-QL-POA-MFAO-00001-10-00001). Research and Technology (R&T) testing of the mixing system at Savannah River Technical Center (SRTC) (SCT-M0SRLE60-00-132-05, -187-02) was completed. The HFP contains two types of vessels (melter feed preparation vessel [MFPV] and melter feed vessel [MFV]).
Y	Plant-size components available for testing	Most of the subcomponents of the system are standard industrial items. Many have been used at other DOE projects (West Valley Demonstration Project [WVDP] and Savannah River Defense Waste Processing Facility [DWPF]). The components can be easily procured or fabricated.
Y	System interface requirements known (how will system be integrated into the plant?)	Section 9 of the HFP system description (24590-HLW-3YD-HFP-00001) defines the interface requirements.
Y	System requirements flow down through work breakdown structure (design engineering begins)	HFP system description (24590-HLW-3YD-HFP-00001) defines the flowdown requirements.
Y	Requirements for technology verification established	Test acceptance criteria are in Appendix C of the HFP system description (24590-HLW-3YD-HFP-00001). The verification requirements will be defined in the requirements verification matrix planned for inclusion in the HFD system description. This is not yet produced as a project document.
Y	Lab-scale similar system tested with limited range of actual wastes, if applicable	There have been tests at the laboratory-scale (24590-101-TSA-W000-0009-48-01). The use of real wastes is not practicable.
Y	Interfaces between components/subsystems in testing are realistic (benchtop with realistic interfaces)	Benchtop testing with realistic interfaces includes the dusting studies (SCT-M0SRLE60-00-187-02) and experience at WVDP and DWPF.
Y	Significant engineering and design changes	The design is completed and small-scale prototypes have been created to feed prototypical melters such as the DM100 (24590-101-TSA-W000-0009-48-01) and DM1200 melters (24590-101-TSA-W000-0009-144-02; 24590-101-TSA-W000-0009-144-00005; 24590-101-TSA-W000-0009-98-07) at the Vitreous State Laboratory of the Catholic University of America (VSL).
Y	Prototypes of equipment system components have been created (know how to make equipment)	The design is completed and small-scale prototypes have been created to feed prototypical melters the DM100 (24590-101-TSA-W000-0009-48-01) and DM1200 melters (24590-101-TSA-W000-0009-144-02; 24590-101-TSA-W000-0009-144-00005; 24590-101-TSA-W000-0009-98-07) at VSL.

Table C.1. (cont'd)

Criteria Satisfied (Y/N)	Criteria	Basis for Completion
Y	Tooling and machines demonstrated in lab for new manufacturing processes to make component	The design is completed and small-scale prototypes have been created for the DM100 (24590-101-TSA-W000-0009-48-01) and DM1200 melters (24590-101-TSA-W000-0009-144-02; 24590-101-TSA-W000-0009-144-00005; 24590-101-TSA-W000-0009-98-07) at VSL.
Y	High-fidelity lab integration of system completed, ready for test in relevant environments	The design is completed and small-scale prototypes have been created for the DM100 (24590-101-TSA-W000-0009-48-01) and DM1200 melters (24590-101-TSA-W000-0009-144-02; 24590-101-TSA-W000-0009-144-00005; 24590-101-TSA-W000-0009-98-07) at VSL.
Y	Design techniques have been defined to the point where largest problems defined	Hydrogen gas generation in storage vessels (24590-101-TSA-W000-0004-114-00018) was addressed with head space spargers. Concerns have also been raised about possible corrosion/erosion of the spargers during normal operation.
Y	Lab-scale similar system tested with range of simulants	The design is completed and small-scale prototypes have been created for the DM100 (24590-101-TSA-W000-0009-48-01) and DM1200 melters (24590-101-TSA-W000-0009-144-02; 24590-101-TSA-W000-0009-144-00005; 24590-101-TSA-W000-0009-98-07) at VSL.
Y	Fidelity of system mock-up improves from laboratory to bench-scale testing	The design is completed and small-scale prototypes have been created for the DM100 (24590-101-TSA-W000-0009-48-01) and DM1200 melters (24590-101-TSA-W000-0009-144-02; 24590-101-TSA-W000-0009-144-00005; 24590-101-TSA-W000-0009-98-07) at VSL. Testing of the proposed plant-scale system was completed by Philadelphia Mixers. The mixing report helped the vendor to size the system (24590-QL-POA-MFAO-00001-10-0001).
Y	Reliability, Availability, Maintainability Index (RAMI) target levels identified	The HFP is located in the melter cave, which is a high-contamination/high-radiation area (C5/R5); personnel access is not allowed. Maintenance for the HFP performed in the melter cave will be done remotely.
Y	Some special purpose components combined with available laboratory components for testing	Hydrogen gas generation in storage vessels (24590-101-TSA-W000-0004-114-00018) is being addressed with headspace spargers. The technical basis for the spargers is documented in a technical report (24590-101-TSA-W000-0004-160-0000). There has been no engineering-scale, prototypical testing of the sparger system that demonstrates the capability of releasing hydrogen from the blend in the MFPVs and MPVs if the mechanical agitators fail.
Y	Three dimensional drawings and piping and instrumentation diagrams (P&ID) have been prepared	P&IDs are found in Section 10.1.5 of the HFP system description (24590-HLW-3YD-HFP-00001). The jumpers have not been scoped out for fabrication.

Table C.1. (cont'd)

Criteria Satisfied (Y/N)	Criteria	Basis for Completion
Y	Laboratory environment for testing modified to approximate operational environment	The design is completed and small-scale prototypes have been created for the DM100 (24590-101-TSA-W000-0009-48-01) and DM1200 melters (24590-101-TSA-W000-0009-144-02; 24590-101-TSA-W000-0009-144-00005; 24590-101-TSA-W000-0009-98-07) at VSL. Testing of the proposed plant-scale system was completed by Philadelphia Mixers. The mixing report helped the vendor to size the system (24590-QL-POA-MFAO-00001-10-00001).
Y	Component integration issues and requirements identified	A final design has been completed. Component integration issues have been addressed in the testing described in response to the first question of Table C.1.
Y	Detailed design drawings have been completed to support specification of pilot testing system	Design documents are found in Section 10 of the HFP system description (24590-HLW-3YD-HFP-00001). The jumpers have not been scoped out for fabrication.
Y	Requirements definition with performance thresholds and objectives established for final plant design	Section 4 of the system description (24590-HLW-3YD-HFP-00001) and the mechanical datasheets for the equipment include requirements.
Y	Preliminary technology feasibility engineering report completed	Feasibility is captured in multiple R&T reports. HLW simulants to support mixing system tests were developed (TEF-24590-WTP-RT-04-00027). R&T testing of the mixing system at SRTC (SCT-M0SRLE60-00-132-05, -187-02, Rev. 00C (cleared)) was conducted to test blending of glass-forming chemicals and simulated wastes. Bounding physical and rheological conditions were determined (24590-101-TSA-W000-0004-172-00001). The ability to keep glass formers in suspension (24590-101-TSA-W000-0009-171-00001) was demonstrated with the DM1200. Simulants used for mixer testing are described in SCT-M0SRLE60-00-193-02, Rev. 0. Testing of the proposed plant-scale system was completed by Philadelphia Mixers. The mixing report helped the vendor to size the system (24590-QL-POA-MFAO-00001-10-00001).
Y	Integration of modules/functions demonstrated in a laboratory/bench-scale environment	Integration of modules is demonstrated in the R&T reports listed in response to the first question Table C.1. A final report summarizes integrated testing at the VSL (24590-101-TSA-W000-0009-144-00006).
Y	Formal control of all components to be used in final system	A test specification and test plan are generated by the project. The WTP engineering processes include procedures for preparation of engineering drawings (24590-WTP-3DP-G04B-00046, Rev. 16), review of engineering documents (24590-WTP-3DP-G04T-00913, Rev. 5), design change control (24590-WTP-3DP-G04T-00901, Rev. 10), design verification (24590-WTP-3DP-G04B-00027, Rev. 8), and other engineering department procedures. The WTP work processes are also controlled by a configuration management plan (24590-WTP-PL-MG-01-002, Rev. 4).

Table C.1. (cont'd)

Criteria Satisfied (Y/N)	Criteria	Basis for Completion
Y	Configuration management plan in place	The WTP work processes are also controlled by a configuration management plan (24590-WTP-PL-MG-01-002).
Y	Risk management plan documented	WTP Project has established a risk management plan (24590-WTP-RPT-PR-01-006).
Y	Individual process and equipment functions tested to verify that they work (e.g., test reports)	A final report summarizes integrated testing at the VSL (24590-101-TSA-W000-0009-144-00006). The mixing system design has been provided by the vendor. The mixing report from the vendor demonstrates the feasibility of the system design (24590-QL-POA-MFAO-00001-10-00001). R&T testing of the mixing system at SRTC (SCT-M0SRLE60-00-132-05; -187-02) was completed.

Table C.2. Technology Readiness Level 6 Summary for HLW Melter Feed Process System (HFP)

Criteria Satisfied (Y/N)	Criteria	Basis for Completion
Y	Performance and behavior of subcomponent interactions understood (including tradeoffs)	The mixing system design has been provided by the vendor. The mixing report from the vendor demonstrates the feasibility of the system design (24590-QL-POA-MFAO-00001-10-00001). R&T testing of the mixing system at SRTC (SCT-M0SRLE60-00-132-05;-187-02, Rev. 00C (cleared)) was completed. HLW simulants to support mixing system tests were developed (TEF-24590-WTP-RT-04-00027; 24590-101-TSA-W000-0004-172-00001). The ability to keep glass formers in suspension (24590-101-TSA-W000-0009-171-00001) was demonstrated with the DM1200 melter. Simulants used for mixer testing are described in SCT-M0SRLE60-00-193-02. Other R&T reports that characterize simulants and testing include SCT-M0SRLE60-00-211-00001; 24590-101-TSA-W000-00009-106-00021; and 24590-101-TSA-W000-0009-144-00006.
Y	Reliability, Availability, Maintainability Index levels established	RAMI targets have been established in WTP Basis of Design for HLW Vitrification Facility (24590-WTP-DB-ENG-01-001). The 2005 WTP Operational Research Assessment Report (24590-WTP-RPT-PO-05-001) documents acceptability of the design concept.
Y	Frequent design changes occur	The final design of the equipment has been completed. Most drawings and calculations are identified in the HFP system description (24590-HLW-3YD-HFP-00001).
Y	Draft design drawings for final plant system are nearly complete	The final design of the equipment is completed. Most drawings and calculations are identified in the HFP system description (24590-HLW-3YD-HFP-00001). Section 10.1.8 of the HFP system description includes the equipment drawing citations.
Y	Operating environment for final system known	The operating environment for the HFP is specified in the WTP Basis of Design (24590-WTP-DB-ENG-01-001), the HFP system description (24590-HLW-3YD-HFP-00001), and the HLW PSAR (24590-WTP-PSAR-ESH-01-002-04).
Y	Collection of actual maintainability, reliability, and supportability data has been started	The RAMI data is included the RAMI Assessment Report (24590-HLW-RPT-PO-05-0001, Rev. 0) and the 2005 WTP Operational Research Assessment Report (24590-WTP-RPT-PO-05-001, Rev. 0). This information is based on testing results of similar equipment and literature reviews of applicable designs.
Y	Estimated cost of the system design is identified	The cost of the HFP is provided in the May 2005 WTP Estimate at Completion (24590-WTP-CE-PC-06-001, Rev. 0).

Table C.2. (cont'd)

Criteria Satisfied (Y/N)	Criteria	Basis for Completion
N	Engineering-scale similar system tested with a range of simulants	An engineering-scale similar to HFP was system-tested with a range of simulants using the DM1200 melter. See response to the first question for Table C.2. Air spargers had to be added to the design. The technical basis for the spargers is documented in a technical report (24590-101-TSA-W000-0004-160-0000). Additional Quality Assurance Requirements Document (QARD)-based testing (VSL-06T1000-1) is planned as part of the R&T Program to validate the number of samples required.
Y	Modeling and simulation used to simulate system performance in an operational environment	The performance of the HFP has been modeled using the Tank Utilization Assessment Model (24590-WTP-RPT-PO-05-008, Rev. 0) and the Mass Balance Model (24590-WTP-RPT-PO-05-009, Rev. 0). The results of these assessments show that the HFP systems will support project requirements.
N	Plan for demonstration of prototypical equipment and process testing completed, results verify design	Most prototypical equipment has been demonstrated in a relevant environment in the absence of radioactive species. Large-scale testing with actual radioactive waste offgas is not practical. The test reports are listed in response to the first question for Table C.2. The HFP uses mechanical agitators to mix the vessel contents, which did not give adequate mixing for hydrogen. Air spargers had to be added to the design. The technical basis for the spargers is documented in a technical report (24590-101-TSA-W000-0004-160-0000). There has been no engineering-scale, prototypical testing of the sparger systems that demonstrates the capability of releasing hydrogen from the blend in the MFPVs and MPVs if the mechanical agitators fail. Additional QARD testing (VSL-06T1000-1) is planned as part of the R&T Program to validate the number of samples required.
Y	Operating limits determined using engineering-scale system (from design, safety, environmental compliance)	The operating conditions for the HFP have been established based upon engineering analysis presented in the HFP system description (24590-HLW-3YD-HFP-00001), and the testing reports identified in the response to the first question for Table C.2. Additional testing is planned to assess the degree of homogenization to support feed make-up sampling requirements.
Y	Operational requirements document available	The minimum operating requirements for the HFP are defined in the WTP Operations Requirements Document (24590-WTP-RPT-OP-01-001) and the HFP system description (24590-HLW-3YD-HFP-00001).
Y	Off-normal operating responses determined for engineering-scale system	An initial assessment of off-normal operations along with corrective actions is identified in the specification for the upcoming QARD testing (VSL-06T1000-1). See Section 7.2 of the HFP system description (24590-HLW-3YD-HFP-00001).
Y	System technical interfaces defined	The identification of the technical interface requirements is included in Section 9 of the HFP system description (24590-HLW-3YD-HFP-00001).

Table C.2. (cont'd)

Criteria Satisfied (Y/N)	Criteria	Basis for Completion
N	Component integration demonstrated at an engineering scale	Most of the subcomponents of the system are standard industrial items. Many have been used at other DOE projects (WVDP and DWPF). WTP Project-specific testing completed by VSL (24590-101-TSA-W000-0009-171-00001), SRTC (SCT-M0SRLE60-00-132-05; -187-02) and Philadelphia Mixers (24590-QL-POA-MFAO-00001-10-00001) provides the specifications for the plant-scale system. However, the original limits for tests may not address the entire range of properties for waste feeds expected at the WTP from pretreatment, and pilot testing did not test the ability to hold glass formers in suspension with low solids concentration. There has been no engineering- scale, prototypical testing of the sparger system that demonstrates the capability of releasing hydrogen from the blend in the MFPVs and MPVs if the mechanical agitators fail.
Y	Scaling issues that remain are identified and supporting analysis is complete	No scaling issues remain. The mixing system design has been provided by the vendor. The agitation system design provided by the vender is based upon vessel design and mixing requirements. The mixing report from the vendor demonstrates adequacy of the system design (24590-QL-POA-MFAO-00001-10-00001).
Y	Analysis of project timing ensures technology will be available when required	The May 2006 WTP Estimate at Completion (24590-WTP-CE-PC-06-001, Rev. 0) provides an integrated schedule showing how the HFP technology will be incorporated into the HLW Vitrification Facility. Technology availability does not constrain this schedule.
Y	Have begun to establish an interface control process	An identification of the technical interface requirements is included in Section 9 of the HFP system description (24590-HLW-3YD-HFP-00001).
Y	Acquisition program milestones established for start of final design (CD-2)	The May 2006 WTP Estimate at Completion (24590-WTP-CE-PC-06-001, Rev. 0) provides an integrated schedule showing how the HFP technology will be incorporated into the HLW Vitrification Facility. Technology availability does not constrain this schedule.
Y	Critical manufacturing processes prototyped	The HFP design (24590-HLW-3YD-HFP-00001) is based upon existing technology, commonly fabricated equipment, and standard industry components.
Y	Most pre-production hardware is available to support fabrication of the system	The HFP design (24590-HLW-3YD-HFP-00001) is based upon existing technology and standard industry components.
Y	Engineering feasibility fully demonstrated (e.g., will it work?)	The mixing system design has been provided by the vendor based upon vessel design and mixing requirements. The mixing report from the vendor, VSL, and SRTC demonstrates adequacy of the system design (24590-QL-POA-MFAO-00001-10-00001; SCT-M0SRLE60-00-187-02; VSL-00R2590-2; 24590-101-TSA-W000-0009-34-03; 24590-101-TSA-W000-0009-118-00009).
Y	Materials, process, design, and integration methods have been employed (e.g., can design be produced?)	The HFP design is based upon existing technology and standard industry components. Vessels for the HFP have been fabricated and are located on the WTP site.
Y	Technology "system" design specification complete and ready for detailed design	The design of the plant-scale system has been completed. The HFP design (24590-HLW-3YD-HFP-00002) is based upon existing technology and standard industry components.

Table C.2. (cont'd)

Criteria Satisfied (Y/N)	Criteria	Basis for Completion
Y	Components are functionally compatible with operational system	Common components are being used in the design. Operational requirements were defined and incorporated into the stress tests being conducted by the vendor. A mixing report from Philadelphia Mixers demonstrates initial feasibility of the system design (24590-QL-POA-MFAO-00001-10-00001).
Y	Engineering-scale system is high-fidelity functional prototype of operational system	The mixer tests at Philadelphia Mixer demonstrated effective operation in prototypic conditions representative of plant conditions (24590-QL-POA-MFAO-00001-10-00001). There has been no engineering-scale, prototypical testing of the sparger system that demonstrates the capability of releasing hydrogen from the blend in the MFPVs and MPVs if the mechanical agitators fail.
Y	Formal configuration management program defined to control change process	The WTP engineering processes include procedures for preparation of engineering drawings (24590-WTP-3DP-G04B-00046, Rev. 16), review of engineering documents (24590-WTP-3DP-G04T-00913, Rev. 5), design change control (24590-WTP-3DP-G04T-00901, Rev. 10), design verification (24590-WTP-3DP-G04B-00027, Rev. 8), and other engineering department procedures. The WTP work processes are also controlled by a configuration management plan (24590-WTP-PL-MG-01-002, Rev. 4).
Y	Integration demonstrations have been completed (e.g., construction of testing system)	The mixing system design has been provided by Philadelphia Mixers. The agitation system design is based upon the vessel design and WTP mixing requirements. The mixing test report from Philadelphia Mixer demonstrates that the equipment components are compatible (24590-QL-POA-MFAO-00001-10-00001, Rev. 00B).
Y	Final Technical Report on Technology completed	The mixing test report for the HFP vessels provided by Philadelphia Mixers demonstrate adequacy of system design (24590-QL-POA-MFAO-00001-10-00001, Rev. 00B). The R&T testing of the mixing system has been completed as described in response to the first question of Table C.2. The HFP uses mechanical agitators to mix the vessel contents, which did not give adequate mixing for hydrogen. Air spargers had to be added to the design. The technical basis for the spargers is documented in a technical report (24590-101-TSA-W000-0004-160-0000). There has been no engineering-scale, prototypical testing of the sparger systems that demonstrates the capability of releasing hydrogen from the blend in the MFPVs and MPVs if the mechanical agitators fail. Additional QARD testing (VSL-06T1000-1) is planned as part of the R&T Program to validate the number of samples required.

Table C.2. (cont'd)

Criteria Satisfied (Y/N)	Criteria	Basis for Completion
Y	Waste processing issues have been identified and major ones have been resolved	Issues have been resolved associated with scale-up of the equipment systems, interaction of glass formers and waste (offgas-ing and foaming) (SCT-M0SRLE60-00-196-00001) and minimization of dusting (SCT-M0SRLE60-00-187-02) of the glass-forming chemicals during addition to the vessel. The technical basis for predicting mixing and flammable gas behavior (24590-101-TSA-W000-0004-114-00018) is understood. Mixing reports from vendor demonstrate adequacy of system design (24590-QL-POA-MFAO-00001-10-00001).
Y	Process and tooling are mature to support fabrication of components/system	A majority of the plant equipment has been fabricated at least once. Most of the subcomponents of the system are standard industrial items. Many have been used at other DOE projects (WVDP and DWPF).
Y	Production demonstrations are complete (at least one time)	A majority of the plant equipment has been fabricated at least once. Most of the subcomponents of the system are standard industrial items. Many have been used at other DOE projects (WVDP and DWPF).

Table C.3. Technology Readiness Level 5 Summary for HMP Melter System (HMP)

Criteria Satisfied (Y/N)	Criteria	Basis for Completion
Y	Cross technology effects (if any) have been fully identified (e.g., system internally consistent)	R&T was completed on the DM1200 platform. This one third plant-scale melter was used to support testing and characterized the performance and behavior of equipment components and different process flowsheets representative of the WTP mission. Equipment components tested included the melter and its specific design features as documented in the following reports: 24590-101-TSA-W000-0009-164-00001; 4590-101-TSA-W000-0009-162-00001; 24590-101-TSA-W000-0009-74-01; 24590-101-TSA-W000-0009-48-01; 24590-101-TSA-W000-0010-06-04A; 24590-101-TSA-W000-0009-102-01; 24590-101-TSA-W000-0009-34-03; 24590-101-TSA-W000-0009-144-03; 24590-101-TSA-W000-0009-72-05; 24590-101-TSA-W000-0009-82-02; 24590-101-TSA-W000-0009-72-08; 24590-101-TSA-W000-0009-144-01; 24590-101-TSA-W000-0009-144-02; 24590-101-TSA-W000-0009-98-07; 24590-101-TSA-W000-0009-105-04; 24590-101-TSA-W000-0009-64-00003; 24590-101-TSA-W000-0009-156-00001; 24590-101-TSA-W000-0009-118-00009; 24590-101-TSA-W000-0009-153-00001; 24590-101-TSA-W000-0009-158-00001; 24590-101-TSA-W000-0009-119-00003; 24590-101-TSA-W000-0009-157-00002; 24590-101-TSA-W000-00009-106-00021; 24590-101-TSA-W000-0009-121-00006; 24590-101-TSA-W000-0009-168-00001; 24590-101-TSA-W000-00009-098-00009; 24590-101-TSA-W000-0009-165-00001; 24590-101-TSA-W000-0009-144-00006).
Y	Plant-size components available for testing	Full-scale components have been used at DWPF and WVDP. The components can be easily procured or fabricated.
Y	System interface requirements known (how will system be integrated into the plant?)	Section 9 of the HMP system description (24590-HMP-3YD-HMP-00001) defines the interface requirements.
Y	System requirements flow down through work breakdown structure (design engineering begins)	Section 4 of the HMP system description (24590-HMP-3YD-HMP-00001) defines the flowdown requirements.
Y	Requirements for technology verification established	Test acceptance requirements are in Appendix A of the HMP system description (24590-HMP-3YD-HMP-00001). The verification requirements will be defined in the requirements verification matrix in the system description. This is not yet produced as a project document.
Y	Lab-scale similar system tested with limited range of actual wastes, if applicable	There have been tests at the laboratory-scale with real wastes (24590-101-TSA-W000-0009-168-00001; SCT-M0SRLE60-00-110-17; SCT-M0SRLE60-00-218-00001).
Y	Interfaces between components/subsystems in testing are realistic (benchtop with realistic interfaces)	Benchtop testing with realistic interfaces includes the DM1200 studies and there is past experience at WVDP and DWPF. See response to the first question of Table C.3 for test reports.

Table C.3. (cont'd)

Criteria Satisfied (Y/N)	Criteria	Basis for Completion
Y	Significant engineering and design changes	The design is completed and components are being fabricated.
Y	Prototypes of equipment system components have been created (know how to make equipment)	Small-scale prototypes have been created at VSL. Full-scale components have been used at DWPF and WVDP. Full-scale components are being fabricated.
Y	Tooling and machines demonstrated in lab for new manufacturing processes to make component	Small-scale prototypes have been created at VSL. Full-scale components have been used at DWPF and WVDP. Full-scale components are being fabricated.
Y	High-fidelity lab integration of system completed, ready for test in relevant environments	Small-scale prototypes have been created at VSL. Full-scale components have been used at DWPF and WVDP. Full-scale components are being fabricated.
Y	Design techniques have been defined to the point where largest problems defined	The design is based on the WVDP, DWPF, Savannah River M-Area, DM100, DM1200, and DM3300 designs and experience.
Y	Lab-scale similar system tested with range of simulants	DM100 tests were conducted for AZ-101 and C-106/AY-102 HLW feeds (24590-101-TSA-W000-00009-106-00021; 24590-101-TSA-W000-0009-48-01; SCT-M0SRLE60-00-21-05, Rev. 00B).
Y	Fidelity of system mock-up improves from laboratory to bench-scale testing	The fidelity of the HLW test melters improves as the design capacity of the test platform increases from the DM100 to the DM1200 melter at VSL. Test results for the DM1200 are summarized in 24590-101-TSA-W000-0009-171-00001.
Y	Reliability, Availability, Maintainability Index (RAMI) target levels identified	The RAMI data is included the RAMI Assessment Report (24590-HLW-RPT-PO-05-0001, Rev. 0) and the 2005 WTP Operational Research Assessment Report (24590-WTP-RPT-PO-05-001, Rev. 0). This information is based on testing results of similar equipment and literature reviews of applicable designs.
Y	Some special purpose components combined with available laboratory components for testing	Special purpose components in the present melter design include J-Tube bubblers. Beginning in May 2003, multiple outlet bubblers were used in the DM1200 (24590-101-TSA-W000-0009-171-00001). The HLW bubbler life requirement is 2 months. Testing in the DM1200 with a limited number of feed compositions has demonstrated bubbler life in excess of 2 months with very little corrosion of the bubbler in the cold cap area (24590-101-TSA-W000-0009-119-00003). DM1200 testing was augmented by physical model testing at full WTP HLW melter depth and testing in the DM1200 under idling conditions to determine bubbler air supply requirements; i.e., ability to run double nozzle bubbler with a single air supply (24590-101-TSA-W000-0009-153-00001). All these results were combined with engineering analyses to specify bubbler design and operational requirements for the plant design (24590-101-TSA-W000-0009-162-00001).

Table C.3. (cont'd)

Criteria Satisfied (Y/N)	Criteria	Basis for Completion
Y	Three dimensional drawings and piping and instrumentation diagrams (P&ID) have been prepared	P&IDs are listed in the HMP system description (24590-HMP-3YD-HMP-00001) for the full-scale system. Fabrication drawings have been completed.
Y	Laboratory environment for testing modified to approximate operational environment	The DM100 and DM1200 laboratory environment was prototypic of the operational environment (24590-101-TSA-W000-00009-106-00021; 24590-101-TSA-W000-0009-48-01).
Y	Component integration issues and requirements identified	A final design has been completed. Component integration has been addressed in the HMP system description (24590-HMP-3YD-HMP-00001).
Y	Detailed design drawings have been completed to support specification of pilot testing system	Detailed design drawings have been completed for the DM1200 melter, and it has already been fabricated. Design drawings for the full-scale system are listed Section 10 of the HMP system description (24590-HMP-3YD-HMP-00001).
Y	Requirements definition with performance thresholds and objectives established for final plant design	The HMP system description (24590-HMP-3YD-HMP-00001) and the mechanical datasheets for the equipment include detailed requirements.
Y	Preliminary technology feasibility engineering report completed	The melters were designed by Duratek (now part of Energy*Solutions*). Duratek based its design on DOE technology developments and its own experience with the second generation DM5000 melter used to process Savannah River M-Area low level waste (5.0 m^2), the DM-1000 operated at the VSL, and WTP LAW pilot (3.3 m^2 operated at Duratek's Columbia, Maryland, site) melters. Versions of virtually all the subsystems that make up the HMP have been tested in one or more of the above melters (24590-101-TSA-W000-0009-171-00001; 24590-101-TSA-W000-0009-153-00001; 24590-101-TSA-W000-0009-162-00001).
Y	Integration of modules/functions demonstrated in a laboratory/bench-scale environment	Integration of modules is demonstrated in the R&T reports for the DM100 and DM1200 melters. Reports are listed in the response to the first question of Table C.3
Y	Formal control of all components to be used in final system	The WTP engineering processes include procedures for preparation of engineering drawings (24590-WTP-3DP-G04B-00046, Rev. 16), review of engineering documents (24590-WTP-3DP-G04T-00913, Rev. 5), design change control (24590-WTP-3DP-G04T-00901, Rev. 10), design verification (24590-WTP-3DP-G04B-00027, Rev. 8), and other engineering department procedures. The WTP work processes are also controlled by a configuration management plan (24590-WTP-PL-MG-01-002, Rev. 4).

Table C.3. (cont'd)

Criteria Satisfied (Y/N)	Criteria	Basis for Completion
Y	Configuration management plan in place	The WTP work processes are also controlled by a configuration management plan (24590-WTP-PL-MG-01-002, Rev. 4).
Y	Risk management plan documented	WTP Project has established a risk management plan (24590-WTP-RPT-PR-01-006).
Y	Individual process and equipment functions tested to verify that they work (e.g., test reports)	Functions were tested on the DM-1200 melter operated at the VSL (24590-101-TSA-W000-0009-171-00001; 24590-101-TSA-W000-0009-153-00001).

Table C.4. Technology Readiness Level 6 Summary for HMP Melter System (HMP)

Criteria Satisfied (Y/N)	Criteria	Basis for Completion
Y	Performance and behavior of subcomponent interactions understood (including tradeoffs)	Duratek design documentation explains the tradeoffs evaluated in the design and operation of the HLW melter. Tradeoffs included how to obtain the surface area, depth of melter, and throughput needed within the space envelope and operating lifetime of the WTP. R&T has completed testing on the HMP on the DM1200 platform. The DM1200, a one-third plant-scale melter, was used to support testing and characterization of the performance and behavior of equipment components and different process flowsheets representative of the WTP mission. Equipment components tested included the melter and its specific design features documented in the following reports: 24590-101-TSA-W000-0009-164-00001; 24590-101-TSA-W000-0009-162-00001; 24590-101-TSA-W000-0009-74-01; 24590-101-TSA-W000-0009-48-01; 24590-101-TSA-W000-0010-06-04A; 24590-101-TSA-W000-0009-102-01; 24590-101-TSA-W000-0009-34-03; 24590-101-TSA-W000-0009-144-03; 24590-101-TSA-W000-0009-72-05; 24590-101-TSA-W000-0009-72-05; 24590-101-TSA-W000-0009-82-02; 24590-101-TSA-W000-0009-72-08; 24590-101-TSA-W000-0009-72-08; 24590-101-TSA-W000-0009-144-01; 24590-101-TSA-W000-0009-144-02; 24590-101-TSA-W000-0009-98-07; 24590-101-TSA-W000-0009-105-04; 24590-101-TSA-W000-0009-64-00003; 24590-101-TSA-W000-0009-156-00001; 24590-101-TSA-W000-0009-118-00009; 24590-101-TSA-W000-0009-118-00010; 24590-101-TSA-W000-0009-153-00001; 24590-101-TSA-W000-0009-158-00001; 24590-101-TSA-W000-0009-119-00003; 24590-101-TSA-W000-0009-157-00002; 24590-101-TSA-W000-00009-106-00021; 24590-101-TSA-W000-0009-121-00006; 24590-101-TSA-W000-0009-168-00001; 24590-101-TSA-W000-00009-098-00009; 24590-101-TSA-W000-0009-165-00001; 24590-101-TSA-W000-0009-144-00006; 24590-101-TSA-W000-0009-0174-00001.
Y	Reliability, Availability, Maintainability Index (RAMI) levels established	RAMI targets have been established in WTP Basis of Design for HLW Vitrification Facility (24590-WTP-DB-ENG-01-001, Rev. 1C). The 2005 WTP Operational Research Assessment Report (24590-WTP-RPT-PO-05-001, Rev. 0) documents acceptability of the design concept.
Y	Frequent design changes occur	The final design of the equipment has been completed. Most drawings and calculations are identified in the HMP system description (24590-HMP-3YD-HMP-00001).
Y	Draft design drawings for final plant system are nearly complete	The final design of the equipment is completed. Most drawings and calculations are listed in Section 10 of the HMP system description (24590-HMP-3YD-HMP-00001).
Y	Operating environment for final system known	The operating environment for the HMP is specified in the WTP Basis of Design (24590-WTP-DB-ENG-01-001, Rev. 1C), the HMP system description (24590-HMP-3YD-HMP-00001, Rev. 1), and the HLW PSAR (24590-WTP-PSAR-ESH-01-002-04).
Y	Estimated cost of the system design is identified	The cost of the HMP is provided in the May 2006 WTP Estimate at Completion (24590-WTP-CE-PC-06-001).

Table C.4. (cont'd)

Criteria Satisfied (Y/N)	Criteria	Basis for Completion
Y	Collection of actual maintainability, reliability, and supportability data has been started	The RAMI data is included the RAMI Assessment Report (24590-HMP-RPT-PO-05-0001, Rev. 0) and the 2005 WTP Operations Research Assessment Report (24590-WTP-RPT-PO-05-001, Rev. 0). This information is based on testing results of similar equipment and literature reviews of applicable designs.
N	Engineering-scale similar system tested with a range of simulants	See response to the first question of Table C.4. The demonstrated environment for the HMP has focused on the initial tank waste (waste from tanks AY-102 and C-106) that will be processed in the WTP. Approximately 600,000 lb of glass (based on commissioning waste compositions) was made (24590-101-TSA-W000-0009-171- 00001) during a 288-day continuous test run of the DM1200. However, there has been little testing of feeds that are high in aluminum, chromium, zirconium, sulfur, and bismuth phosphate ($BiPO_4$) and are characteristic of Balance of Mission feeds. .
Y	Modeling and simulation used to simulate system performance in an operational environment	The performance of the HMP has been modeled using the 2005 WTP Operations Research Assessment Report (24590-WTP-RPT-PO-05-001) and the Tank Utilization Assessment Model (24590-WTP-RPT-PO-05-008, Rev. 0). The results of these assessments show that the HMP will support project requirements.
Y	Plan for demonstration of prototypical equipment and process testing completed, results verify design	Approximately 600,000 lbs of glass (based on commissioning waste compositions) was made (24590-101-TSA-W000-0009-171- 00001) during 288 days of testing over a 5-year period. See response to the first question of Table C.4.
Y	Operating limits determined using engineering-scale system (from design, safety, environmental compliance)	The operating conditions for the HMP have been established based upon engineering analysis presented in the HMP system description (24590-HMP-3YD-HMP-00001), and the testing reports identified in the response to the first question of Table C.4. See Section 10 of the system description for the specifications.
Y	Operational requirements document available	The minimum operating requirements for the HMP are defined in the WTP Operations Requirements Document (24590-WTP-RPT-OP-01-001, Rev. 2) and the HMP system description (24590-HMP-3YD-HMP-00001). Testing in the DM1200 has demonstrated bubbler life in excess of 2 months (24590-101-TSA-W000-0009-119-00003). However, Balance of Mission feed compositions are projected to have higher concentrations of halides and sulfates, which can increase the corrosion rate of the bubbler alloy. Thus a 2 month bubbler life is not been demonstrated. DM1200 testing was augmented by physical model testing (24590-101-TSA-W000-0009-153-00001). All these results were combined with engineering analyses to specify bubbler design and operational requirements for the plant design (24590-101-TSA-W000-0009-162-00001).
Y	Off-normal operating responses determined for engineering-scale system	An initial assessment of off-normal operations along with corrective actions is identified in the specification for the upcoming QARD testing (VSL-06T1000-1). See Section 7.2 of the HMP system description (24590-HMP-3YD-HMP-00001).

Table C.4. (cont'd)

Criteria Satisfied (Y/N)	Criteria	Basis for Completion
Y	System technical interfaces defined	The identification of the technical interface requirements is included in Section 9 of the HMP system description (24590-HMP-3YD-HMP-00001).
N	Component integration demonstrated at an engineering scale	See response to the first question of Table C.4. Although there has been extensive small-scale and engineering-scale prototypical testing of the melter system, it is has not been demonstrated that the HMP can achieve design melt rates for the full range of wastes in the Hanford Site tanks.
Y	Scaling issues that remain are identified and supporting analysis is complete	DM100, DM1200, and DM3300 tests addressed scaling issues. See response to the first question of Table C.4 for available test reports. No scaling issues remain. 24590-101-TSA-W000-0010-407-679, Rev. 00A, *River Protection Project – Waste Treatment Plant HLW Melter Life Report*, provides the bases for the size and service life of the plant melter components.
Y	Analysis of project timing ensures technology will be available when required	May 2006 WTP Estimate at Completion (24590-WTP-CE-PC-06-001, Rev. 0) provides an integrated schedule showing how the HMP technology will be incorporated into the HLW Vitrification Facility. Technology availability does not constrain this schedule.
Y	Have begun to establish an interface control process	An identification of the technical interface requirements is included in Section 9 of the HMP system description (24590-HMP-3YD-HMP-00001).
Y	Acquisition program milestones established for start of final design (CD-2)	May 2006 WTP Estimate at Completion (24590-WTP-CE-PC-06-001, Rev. 0) provides an integrated schedule showing how the HMP technology will be incorporated into the HLW Vitrification Facility. Technology availability does not constrain this schedule.
Y	Critical manufacturing processes prototyped	HMP design is based upon existing technology and standard industry components. Duratek based its materials, process, design, and integration methods on its experience with its second generation DM5000 melter used to process Savannah River M-Area low-level waste, the DM1200 operated at the VSL, and WTP DM3300 LAW pilot melter operated at Duratek's Columbia, Maryland, site.
Y	Most pre-production hardware is available to support fabrication of the system	HMP design is based upon existing technology and standard industry components. Duratek based its materials, process, design, and integration methods on its experience with its second generation DM5000 melter used to process Savannah River M-Area low-level waste, the DM1200 operated at the VSL, and WTP 3300 LAW pilot melter operated at Duratek's Columbia, Maryland, site.

Table C.4. (cont'd)

Criteria Satisfied (Y/N)	Criteria	Basis for Completion
N	Engineering feasibility fully demonstrated (e.g., will it work?)	The demonstrated environment for the HMP has focused on the initial tank waste (waste from tanks AY-102 and C-106) that will be processed in the WTP. Approximately 600,000 lb of glass (based on commissioning waste compositions) was made (24590-101-TSA-W000-0009-171-00001) during 288 days of operation of the DM1200. However, there has been little testing of feeds that are high in aluminum, chromium, zirconium, sulfur, and bismuth phosphate ($BiPO_4$) and are characteristic of Balance of Mission feeds. HLW simulant tests conducted with the DM1200 relied on visual observation of the cold cap and plenum space to control melter feeding rate. The HMP will be controlled remotely on the basis of instrument (temperature, pressure, etc.) readouts. Melter rates are expected to be lower under instrument control because it is generally less responsive to the varying melt conditions that are routinely observed in HLW melters. Projected melter rates are based on receiving waste that has been concentrated to 15 to 20% solids. The WTP Pretreatment Facility may not be able to supply wastes this concentrated for all types of waste. Melter glass production rates drop as solids concentration in the feed drops.
Y	Materials, process, design, and integration methods have been employed (e.g., can design be produced?)	The HMP design is based upon existing technology and standard industry components. Duratek based its materials, process, design, and integration methods on its experience with its second generation DM5000 melter used to process Savannah River M-Area low-level waste, the DM1200 operated at the VSL, and WTP DM3300 LAW pilot melter operated at Duratek's Columbia, Maryland, site.
Y	Technology "system" design specification complete and ready for detailed design	The design of the plant-scale system has been completed. The design is described in the HMP system description (24590-HMP-3YD-HMP-00001).
Y	Components are functionally compatible with operational system	Testing conducted at VSL on the DM1200 melter was the basis for the bubbler designs later used for the WTP. Equipment components tested included the melter and its specific design features, melter feed nozzle, melter thermowells, melter bubblers, melter pouring system, and representative instrument and control systems. See response to the first question of Table C.4 for test reports.
Y	Engineering-scale system is high-fidelity functional prototype of operational system	Testing conducted at VSL on the DM1200 melter was the basis for the bubbler designs later used for the WTP. Equipment components tested included the melter and its specific design features, melter feed nozzle, melter thermowells, melter bubblers, melter pouring system, and representative instrument and control systems. See response to the first question of Table C.4 for test reports.

Table C.4. (cont'd)

Criteria Satisfied (Y/N)	Criteria	Basis for Completion
Y	Formal configuration management program defined to control change process	WTP engineering processes include procedures for preparation of engineering drawings (24590-WTP-3DP-G04B-00046, Rev. 16), review of engineering documents (24590-WTP-3DP-G04T-00913, Rev. 5), design change control (24590-WTP-3DP-G04T-00901, Rev. 10), design verification (24590-WTP-3DP-G04B-00027, Rev. 8), and other engineering department procedures. The WTP work processes are also controlled by a configuration management plan (24590-WTP-PL-MG-01-002, Rev. 4).
Y	Integration demonstrations have been completed (e.g., construction of testing system)	The successful construction and operation of the HLW Vitrification Pilot Plant is documented in the R&T testing reports listed in response to the first question of Table C.4. A description of this testing system is provided in testing reports included as references to the first question. However, some operational and maintenance features of the HMP are new.
Y	Final Technical Report on Technology completed	See response to the first question for Table C.4. Although there has been extensive small-scale and engineering-scale prototypical testing of the melter system, it is has not been demonstrated that the WTP HLW melter can achieve design melt rates for the full range of wastes in the Hanford Site tanks.
Y	Waste processing issues have been identified and major ones have been resolved	Most waste processing issues have been identified, evaluated, and closed including bubbler requirements. The corrosion effects of mercury and mercury compounds on WTP materials were evaluated in electrochemical tests (24590-101-TSA-W000-0004-125-02, Rev. 00B).
Y	Process and tooling are mature to support fabrication of components/system	The fabrication of the HLW melter is in process. No significant fabrication issues have been identified. Final assembly of the melter will occur at the WTP site. All fabrication activities have been awarded.
Y	Production demonstrations are complete (at least one time)	HMP design is based upon existing technology and standard industry components. Duratek based its materials, process, design, and integration methods on its experience with its second generation DM5000 melter used to process Savannah River M-Area low-level waste, the DM1200 operated at the VSL, and WTP 3300 LAW pilot melter operated at Duratek's Columbia, Maryland, site. The design and fabrication of the HLW pilot melter and M-Area melter as well as the DWPF and WVDP melters demonstrate the HLW Plant melters can be fabricated.

Table C.5. Technology Readiness Level 5 Summary for HLW Melter Offgas Treatment Process System and Process Vessel Vent Exhaust System (HOP/PVV)

Criteria Satisfied (Y/N)	Criteria	Basis for Completion
Y	Cross technology effects (if any) have been fully identified (e.g., system internally consistent)	R&T has completed testing on a prototype HOP/PVV offgas system components connected to the DM1200 melter (24590-101-TSA-W000-0009-74-01; 24590-101-TSA-W000-0009-48-01; 24590-101-TSA-W000-0009-54-00001; 24590-101-TSA-W000-0009-34-03; 24590-101-TSA-W000-0009-87-09; 24590-101-TSA-W000-0009-166-00001; VSL-06R6410-2, Rev. 0; 24590-101-TSA-W000-0009-174-00001; 24590-101-TSA-W000-0009-171-00001). Equipment components tested included all prototypical offgas components (i.e., film cooler; submerged bed scrubber [SBS]; high-efficiency mist eliminator [HEME]; wet electrostatic precipitator [WESP]; carbon sulfur bed for mercury removal; 1/30-scale silver mordenite column for iodine removal; thermal catalytic oxidizer [TCO] for organic destruction; selective catalytic reduction (SCR) for NO_x destruction; and high-efficiency particulate air [HEPA] filtration). These testing results demonstrate that the HOP/PVV offgas system will support design requirements as specified in the WTP contract (DE-AC27-01RL14136). The main tradeoff is potential clogging of the film cooler versus high bubbling rate (CCN:144619).
Y	Plant-size components available for testing	Full-scale components have been used at DWPF and WVDP. The components can be easily procured from vendors or fabricated.
Y	System interface requirements known (how will system be integrated into the plant?)	HOP/PVV offgas system description (24590-LAW-3YD-HOP-00001) defines the interface requirements.
Y	System requirements flow down through work breakdown structure (design engineering begins)	HOP/PVV offgas system description (24590-LAW-3YD-HOP-00001) defines the flowdown requirements.
Y	Requirements for technology verification established	Testing specifications have been developed. Test acceptance requirements will be detailed in the system description. The verification requirements will be defined in the requirements verification matrix in the HOP/PVV offgas system description (24590-LAW-3YD-HOP-00001). This is not yet produced as a project document.
Y	Lab-scale similar system tested with limited range of actual wastes, if applicable	Pacific Northwest National Laboratory (PNNL) and SRTC have conducted tests at the laboratory-scale (24590-101-TSA-W000-0004-113-02; SCT-M0SRLE60-00-218-00001, Rev. 00A, (WSRC-TR-2005-00410, Rev. 0) and vitrification and product testing of AY-102/C-106 HLW (Env D)).

Table C.5. (cont'd)

Criteria Satisfied (Y/N)	Criteria	Basis for Completion
Y	Interfaces between components/subsystems in testing are realistic (benchtop with realistic interfaces)	The VSL conducted offgas tests on the DM1200 melter between 2001 and 2005. The DM1200 offgas treatment system consists of an SBS; a WESP; a HEME (for HLW only), a HEPA filter; a TCO; an SCR for NO_x destruction; a packed-bed caustic scrubber (PBS); and a second HEME. System modifications were completed in 2004 to include addition of a full-flow activated carbon adsorber bed and use of TCO catalyst media to match the WTP design. The sulfur–impregnated, activated-carbon column was installed between the HEPA and the TCO. Limited testing of a ~1/30-scale silver mordenite column occurred; e.g., 24590-101-TSA-W000-0009-144-01, Rev. 00B and 24590-101-TSA-W000-0009-098-07, Rev. 00C. The technology is replaceable inside the HLW Facility.
Y	Significant engineering and design changes	Multiple design changes were implemented (24590-HLW-3YD-HOP-00001) as a result of DM1200 testing. The following design modifications address identified issues: Sparging and suction systems were added to remove solids that accumulate in the bottom of the SBS. The WTP HLW WESP was redesigned to isolate the electrical connections and includes a deluge from the bottom of the WESP. The film cooler was designed to be replaceable in case clogging is a significant problem. A film cooler cleaner was developed that will be tested at VSL. Melter offgas jumpers were designed with cleanout access ports and they can be replaced if blockages cannot be removed (CCN:144619).
Y	Prototypes of equipment system components have been created (know how to make equipment)	Small-scale prototypes have been created. All equipment except the film cooler, film cooler cleaner, and melter offgas jumpers are standard industrial equipment.
Y	Tooling and machines demonstrated in lab for new manufacturing processes to make component	Small-scale prototypes have been created. All equipment except the film cooler, film cooler cleaner, and melter offgas jumpers are standard industrial equipment.
Y	High-fidelity lab integration of system completed, ready for test in relevant environments	Small-scale prototypes have been created. All equipment except the film cooler, film cooler cleaner, and melter offgas jumpers are standard industrial equipment.
N	Design techniques have been defined to the point where largest problems defined	While testing has shown it is possible to maintain HLW vitrification melt rates with lower concentration feeds, this mode of operation could lead to offgas system plugging in the melter film cooler or the transition line to the offgas system. These plugs will be diff cult to remove and could constrain glass production (CCN:132846). Film cooler blockage is tied to bubbler rate, which in turn is tied to glass production rate, and the impact of blockage on melter design is not fully understood.

Table C.5. (cont'd)

Criteria Satisfied (Y/N)	Criteria	Basis for Completion
Y	Lab-scale similar system tested with range of simulants	PNNL has conducted tests at the laboratory-scale (24590-101-TSA-W000-0004-113-02). Offgas system testing was conducted using the DM1200 melter system for several system components: SBS (24590-101-TSA-W000-0009-54-00001), TCO (24590-101-TSA-W000-0009-87-09), and WESP (24590-101-TSA-W000-0009-174-00001). All tests were conducted with HLW C-106/ AY-102 simulants (24590-101-TSA-W000-0009-172-00001) with adjustments of several toxic metals, nitrogen oxides, and waste organics to bound the concentrations.
Y	Fidelity of system mock-up improves from laboratory to bench-scale testing	DM1200 offgas test system was prototypical of the plant. Limited testing of a ~1/30-scale silver mordenite column occurred; e.g., 24590-101-TSA-W000-0009-144-01, Rev. 00B and 24590-101-TSA-W000-0009-098-07, Rev. 00C. The silver mordenite column is standard industrial equipment and replaceable inside the HLW Facility.
Y	Reliability, Availability, Maintainability Index (RAMI) target levels identified	RAMI data is included the RAMI Assessment Report (24590-HMP-RPT-PO-05-0001, Rev. 0) and the 2005 WTP Operational Research Assessment Report (24590-WTP-RPT-PO-05-001, Rev. 0). This information is based on testing results of similar equipment and literature reviews of applicable designs.
N	Some special purpose components combined with available laboratory components for testing	DM1200 tests included film coolers, which are special purpose components. However, tests have not been completed on the film cooler cleaner. Unfortunately, the HLW deposits are not soluble and may be difficult to remove.
Y	Three dimensional drawings and piping and instrumentation diagrams (P&ID) have been prepared	P&IDs are listed in the HOP/PVV offgas system description (24590-LAW-3YD-HOP-00001).
Y	Laboratory environment for testing modified to approximate operational environment	DM1200 laboratory environment is prototypic of the operational environment.
Y	Component integration issues and requirements identified	A final design has been completed. Component integrations have been addressed in the HOP/PVV offgas system description (24590-LAW-3YD-HOP-00001.
Y	Detailed design drawings have been completed to support specification of pilot testing system	Detailed design drawings were completed for the DM1200 system prior to testing.
Y	Requirements definition with performance thresholds and objectives established for final plant design	HOP/PVV offgas system description (24590-LAW-3YD-HOP-00001) and the mechanical data sheets for the equipment include detailed requirements.
Y	Preliminary technology feasibility engineering report completed	See responses to the first question of Table C.5.
Y	Integration of modules/functions demonstrated in a laboratory/bench-scale environment	Integration of modules is demonstrated in the R&T reports. . See response to the first question of Table C.5.

Table C.5. (cont'd)

Criteria Satisfied (Y/N)	Criteria	Basis for Completion
Y	Formal control of all components to be used in final system	A test specification and test plan are generated by the project. The design process uses a flowsheet under configuration control.
Y	Configuration management plan in place	The WTP work processes are also controlled by a configuration management plan (24590-WTP-PL-MG-01-002, Rev. 4).
Y	Risk management plan documented	WTP Project has established a risk management plan (24590-WTP-RPT-PR-01-006).
Y	Individual process and equipment functions tested to verify that they work (e.g., test reports)	See response to the first question of Table C.5.

Table C.6. Technology Readiness Level 6 Summary for HLW Melter Offgas Treatment Process System and Process Vessel Vent Exhaust System (HOP/PVV)

Criteria Satisfied (Y/N)	Criteria	Basis for Completion
Y	Performance and behavior of subcomponent interactions understood (including tradeoffs)	R&T has completed testing on a prototype HOP/PVV offgas system connected to the DM1200 melter (24590-101-TSA-W000-0009-166-00001). Equipment components tested included all prototypical offgas components (i.e., film cooler; SBS; HEME; WESP; carbon sulfur bed for mercury removal; 1/30-scale silver mordenite column for iodine removal; TCO for organic destruction; SCR for NO_x destruction; HEPA filtration; and caustic scrubber. Offgas system testing was conducted for several system components: SBS (24590-101-TSA-W000-0009-54-00001), TCO (24590-101-TSA-W000-0009-87-09), and WESP (24590-101-TSA-W000-0009-174-00001). Limited testing of a ~1/30-scale silver mordenite column occurred; e.g., 24590-101-TSA-W000-0009-144-01, Rev. 00B and 24590-101-TSA-W000-0009-098-07, Rev. 00C. The technology is replaceable inside the HLW Facility. The HEME technology has been used at DWPF and WVDP. Tests were conducted with high-level wastes AZ-101, AZ-102, C-104/ AY-101, and C-106/AY-102 simulants (24590-101-TSA-W000-0009-172-00001) with adjustments of several toxic metals, nitrogen oxides, and waste organics to bound the concentrations. These testing results demonstrated the HOP/PVV offgas system will support design requirements as specified in the WTP contract (DE-AC27-01RL14136).
Y	Reliability, Availability, Maintainability Index (RAMI) levels established	RAMI levels have been estimated for HLW Vitrification Facility including the HOP/PVV offgas system. RAMI targets have been established in WTP Basis of Design for HLW Vitrification Facility (24590-WTP-DB-ENG-01-001, Rev. 1C). The 2005 WTP Operational Research Assessment Report (24590-WTP-RPT-PO-05-001, Rev. 0) documents acceptability of the design concept.
Y	Frequent design changes occur	HLW Vitrification Facility including the HOP/PVV is in a detailed design phase. Project and vendor P&IDs have been completed. Design changes occur infrequently and only to support final construction.
Y	Draft design drawings for final plant system are nearly complete	Section 10 of the HOP/PVV offgas system description (24590-HLW-3YD-HOP-00001, Rev. 0) identifies all applicable design documents to support the LMP system design. This includes specifications, calculations, datasheets, process and mechanical system design documents, P&IDs, electrical drawings, control and instrumentation (C&I) specifications, equipment drawings, general arrangement drawings, supplier documents, and authorization basis documents. Vendor design drawings are in progress.

Table C.6. (cont'd)

Criteria Satisfied (Y/N)	Criteria	Basis for Completion
Y	Operating environment for final system known	The operating environment for the HOP/PVV offgas system is specified in the WTP Basis of Design (24590-WTP-DB-ENG-01-001, Rev. 1C) and the HOP/PVV offgas system description (24590-LAW-3YD-HOP-00001). Operating conditions for limited equipment components are also evaluated in the R&T testing reports (24590-101-TSA-W000-0009-54-00001, Rev. 00C). Mechanical datasheets are prepared as part of the final engineering specification.
Y	Collection of actual maintainability, reliability, and supportability data has been started	RAMI data is included the RAMI Assessment Report (24590-LAW-RPT-PO-05-0001, Rev. 0) and the 2005 WTP Operational Research Assessment Report (24590-WTP-RPT-PO-05-001, Rev. 0). This information is based on testing results, vendor information, and literature reviews of applicable designs.
Y	Estimated cost of the system design is identified	The cost of the HOP/PVV offgas system is provided in the May 2006 WTP Estimate at Completion (24590-WTP-CE-PC-06-001, Rev. 0).
Y	Engineering-scale similar system tested with a range of simulants	Equipment components tested on the DM1200 melter system (24590-101-TSA-W000-0009-166-00001) included most prototypical offgas components (i.e., film cooler; SBS; HEME; WESP; carbon sulfur bed for mercury removal; the 1/30-scale silver mordenite column for iodine removal; TCO for organic destruction; SCR for NO_x destruction; and HEPA filtration.
Y	Modeling and simulation used to simulate system performance in an operational environment	The performance of the HOP/PVV offgas system has been modeled using the Tank Utilization Assessment (24590-WTP-RPT-PO-05-008, Rev. 0), the 2005 WTP Operations Research Assessment Report (24590-WTP-RPT-PO-05-001, Rev. 0), and the WTP Material Balance (24590-WTP-RPT-PO-05-009, Rev. 0). These modeling activities have shown that the melter offgas emissions can be treated to meet stack discharge requirements. The WTP Material Balance (24590-WTP-RPT-PO-05-009, Rev. 0) is also used to estimate the emissions from the facility to support the dangerous waste permit assessments. The results of these assessments show that the HOP/PVV have been adequately designed.

Table C.6. (cont'd)

Criteria Satisfied (Y/N)	Criteria	Basis for Completion
N	Plan for demonstration of prototypical equipment and process testing completed, results verify design	The plan for testing the HOP/PVV offgas system is documented in the WTP R&T Program Plan (24590-WTP-PL-RT-01-002,). Reports documenting test results are identified in the response to the first question of Table C.6. While design modifications were incorporated into the final design to address the problems encountered during DM1200 testing, further testing is needed to verify the operational limits of the final design. Problems observed include WESP decontamination factor (DF) and power supply problems (24590-101-TSA-W000-0009-174-00001) Page: 26 [This was DM1200-specific due to the electrical leads being in the process offgas stream (no isolation or purging), inadequate materials for the service intended (grounding strap made of copper and also exposed to the process gases.]; occlusion of the SBS downcomer (24590-101-TSA-W000-0009-54-00001) [This was "solved" using the reference design of the downcomer]; film cooler and transition line blockage (CCN:144619); and failure to meet 99.99% Destruction Removal Efficiency (DRE) for naphthalene (CCN:128559).
N	Operating limits determined using engineering-scale system	Operating limits for the HOP/PVV offgas system are identified in the HOP/PVV offgas system description (24590-HLW-3YD-HOP-00001, Rev. 0). Several problems with operations were identified during DM1200 testing with a limited range of feeds. While design modifications were incorporated into the final design to address the problems, further testing is needed to verify the operational limits of the final design. Problems observed include WESP DF and power supply problems (24590-101-TSA-W000-0009-174-00001); occlusion of the SBS downcomer (24590-101-TSA-W000-0009-54-00001); film cooler and transition line blockage (CCN:144619); and failure to meet 99.99% DRE for naphthalene (CCN:128559). (See previous discussion for an explanation of the WESP and SBS issues.)
Y	Operational requirements document available	The minimum operating requirements for the HOP/PVV offgas system are defined in the WTP Operations Requirements Document (24590-WTP-RPT-OP-01-001) and the HOP/PVV offgas system description (24590-HLW-3YD-HOP-00001).
Y	Off-normal operating responses determined for engineering-scale system	Off-normal operating responses for the HOP/PVV offgas system have been evaluated in the HLW Vitrification Facility PSAR (24590-WTP-PSAR-ESH-01-002-04). Off-normal conditions are described in RPT-W375SH-TE0000.
Y	System technical interfaces defined	Interfaces for the HOP/PVV offgas system are defined the WTP Basis of Design (24590-WTP-DB-ENG-01-001, Rev. 1C) and Section 9 of the HOP/PVV offgas system description (24590-HLW-3YD-HOP-00001, Rev. 0).

Table C.6. (cont'd)

Criteria Satisfied (Y/N)	Criteria	Basis for Completion
N	Component integration demonstrated at an engineering scale	Integrated testing of the HOP/PVV subcomponents has been completed, and is documented in the R&T testing reports identified in response to the first question of Table C.6. Several problems with operations were identified during DM1200 testing with a limited range of feeds. While design modifications were incorporated into the final design to address the problems, further testing is needed to verify the operational limits of the final design. Problems observed include WESP DF and power supply problems (24590-101-TSA-W000-0009-174-00001); occlusion of the SBS downcomer (24590-101-TSA-W000-0009-54-00001); film cooler and transition line blockage (CCN:144619); and failure to meet 99.99% DRE for naphthalene (CCN:128559). (See previous discussion for an explanation of the WESP and SBS issues.)
N	Scaling issues that remain are identified and supporting analysis is complete	The scaling of the HOP/PVV equipment components has been provided in specific component calculations identified in the HOP/PVV offgas system description (24590-HLW-3YD-HOP-00001). The majority of the equipment components for the HOP/PVV are commercially available and the WTP Contractor is using vendor calculations to support final verification of component sizing. A report was completed that demonstrated the impact of increased glass bubbling on higher melter production rate (24590-101-TSA-W000-0009-162-00001). High glass bubbling rates contribute to film cooler blockage (CCN:144619), which may result in limitations on the melter production rate as a result of excess downtime and/or restrictions on the glass bubbling rate.
Y	Analysis of project timing ensures technology will be available when required	May 2006 WTP Estimate at Completion (24590-WTP-CE-PC-06-001, Rev. 0) provides an integrated schedule showing how the HOP/PVV technology will be incorporated into the HLW Vitrification Facility. Technology availability does not constrain this schedule.
Y	Have begun to establish an interface control process	The interfaces between the HOP/PVV and the balance of the HLW Vitrification Facility are described in the HOP/PVV offgas system description (24590-HLW-3YD-HOP-00001, Rev. 0). This includes both physical and process interfaces with the HLW Vitrification Facility. These requirements have been factored into the design of the HOP/PVV.
Y	Acquisition program milestones established for start of final design (CD-2)	The acquisition of HOP/PVV offgas system components is defined in the May 2006 WTP Estimate at Completion (24590-WTP-CE-PC-06-001, Rev. 0). The project has completed CD-2 as identified in DOE O 413.3A and has completed CD-3, Start of Construction.
Y	Critical manufacturing processes prototyped	Engineering and procurement activities for the HOP/PVV have been initiated. Based upon fabrication and procurement of the HOP/PVV components, no significant fabrication issues have been identified.
Y	Most pre-production hardware is available to support fabrication of the system	The fabrication of the HOP/PVV is in process. The SBS, film coolers, and HEMEs were used for DOE's WVDP.

Table C.6. (cont'd)

Criteria Satisfied (Y/N)	Criteria	Basis for Completion
N	Engineering feasibility fully demonstrated (e.g., will it work?)	Engineering-scale testing of the HOP/PVV indicates that the plant design will perform as required. Test results are provided in the R&T reports identified in the response to the first question of Table C.6. Problems observed include WESP DF and power supply problems (24590-101-TSA-W000-0009-174-00001); occlusion of the SBS downcomer (24590-101-TSA-W000-0009-54-00001); film cooler and transition line blockage (CCN:144619); and failure to meet 99.99% DRE for naphthalene (CCN:128559). (See previous discussion for an explanation of the WESP and SBS issues.)
Y	Materials, process, design, and integration methods have been employed (e.g., can design be produced?)	The fabrication of the HOP/PVV components is in process. No significant fabrication issues have been identified. Qualification of the carbon sulfur absorbent by testing is still in process.
Y	Technology "system" design specification complete and ready for detailed design	The design of the HOP/PVV offgas system is complete. The design concept is described in the HOP/PVV offgas system description (24590-HLW-3YD-HOP-00001) and supporting design documentation references.
Y	Components are functionally compatible with operational system	The integration of the HOP/PVV with the HLW Vitrification Facility is described in the HOP/PVV offgas system description (24590-HLW-3YD-HOP-00001, Rev. 1) and the WTP Basis of Design (24590-WTP-DB-ENG-01-001, Rev. 1C). No compatibility issues are identified based on these specifications.
N	Engineering-scale system is high-fidelity functional prototype of operational system	DM1200 offgas system used in testing offgas components is representative of the process system designed for the HLW Vitrification Facility. Testing of this offgas system has provided data that is representative of plant-scale operations. See response to the first question of Table C.6. Design modifications were incorporated into the final design to address the problems, so that further testing is needed to the final design. Problems observed include WESP DF and power supply problems (24590-101-TSA-W000-0009-174-00001); occlusion of the SBS downcomer (24590-101-TSA-W000-0009-54-00001); film cooler and transition line blockage (CCN:144619); and failure to meet 99.99% DRE for naphthalene (CCN:128559). (See previous discussion for an explanation of the WESP and SBS issues.)
Y	Formal configuration management program defined to control change process	WTP engineering processes include procedures for preparation of engineering drawings (24590-WTP-3DP-G04B-00046, Rev. 16), review of engineering documents (24590-WTP-3DP-G04T-00913, Rev. 5), design change control (24590-WTP-3DP-G04T-00901, Rev. 10), design verification (24590-WTP-3DP-G04B-00027, Rev. 8), and other engineering department procedures. The WTP work processes are also controlled by a configuration management plan (24590-WTP-PL-MG-01-002, Rev. 4).

Table C.6. (cont'd)

Criteria Satisfied (Y/N)	Criteria	Basis for Completion
N	Integration demonstrations have been completed (e.g., construction of testing system)	The successful construction and operation of the DM1200 HOP/PVV offgas system is documented in select R&T testing reports identified in the first question of Table C.6. A description of this testing system is provided in test reports included as response to the first question. While design modifications were incorporated into the final design to address the problems, further testing is needed to verify the operational limits of the final design. Problems observed include WESP DF and power supply problems (24590-101-TSA-W000-0009-174-00001); occlusion of the SBS downcomer (24590-101-TSA-W000-0009-54-00001); film cooler and transition line blockage (CCN:144619); and failure to meet 99.99% DRE for naphthalene (CCN:128559).
N	Final Technical Report on Technology completed	Problems observed during DM1200 testing include WESP DF and power supply problems (24590-101-TSA-W000-0009-174-00001); occlusion of the SBS downcomer (24590-101-TSA-W000-0009-54-00001); film cooler and transition line blockage (CCN:144619); and failure to meet 99.99% DRE for naphthalene (CCN:128559). Testing did not demonstrate feasibility of the film cooler cleaner or compliance with maximum achievable control technology (MACT) standards; therefore, the final technology testing is not completed.
Y	Waste processing issues have been identified and major ones have been resolved	Carbon beds must be changed out every 2 years, which will be conducted during a shutdown. Several issues were identified with HEPA filter lifespan, uncertainty with the MACT, and qualification of the carbon sorbant. These waste processing issues have been identified, evaluated, and closed. These issues and their resolution are included in the response to the first question of this table.
Y	Process and tooling are mature to support fabrication of components/system	The fabrication of the HOP/PVV is in process. No significant fabrication issues have been identified. Qualification of the carbon sulfur absorbent by testing is in process.
Y	Production demonstrations are complete (at least one time)	The design and fabrication of the DM1200 HOP/PVV offgas system demonstrates that the plant-scale system can be fabricated.

Table C.7. Technology Readiness Level 5 Summary for HLW Pulse Jet Mixer (PJM) System and Radioactive Liquid Waste Disposal System (RLD)

Criteria Satisfied (Y/N)	Criteria	Basis for Completion
N	Cross technology effects (if any) have been fully identified (e.g., system internally consistent)	Cross technology effects are analyzed in the CFD model reports listed in Section 10.2.4 of the PJM system description (24590-HLW-3YD-50-00003). A recent review of the WTP flowsheet (CCN:132846) identified potential design issues with the PJM mixed vessels containing Newtonian process wastes. These issues include a design basis that discounts the effects of large particles and of rapidly settling Newtonian slurries. There is also insufficient testing of the selected designs. In response to this issue, the WTP Contractor has established a plan (24590-WTP-PL-ENG-06-0013) for testing to evaluate the mixing behavior of vessels that are anticipated to contain Newtonian fluids.
Y	Plant-size components available for testing at required scale	Full-scale components have been used at Sellafield, U.K. (24590-CM-TSA-HXYG.0008). The components can be easily procured or fabricated from AEA Technology. The project has done operational analysis to understand the scale of vessels required for the WTP.
Y	System interface requirements known (how will system be integrated into the plant?)	Section 9 of the RLD, HOP, PJM, and PJV system descriptions (24590-HLW-3YD-HOP-00001; 24590-HLW-3YD-HPH-00001; 24590-HLW-3YD-50-00003; 24590-HLW-3YD-50-00003; 24590-HLW-3YD-RLD-00001) define the interface requirements.
Y	System requirements flow down through work breakdown structure (design engineering begins)	RLD, HOP, PJM, and PJV system descriptions (24590-HLW-3YD-HOP-00001; 24590-HLW-3YD-HPH-00001; 24590-HLW-3YD-50-00003; 24590-HLW-3YD-50-00003; 24590-HLW-3YD-RLD-00001) define the flowdown requirements.
N	Requirements for technology verification established	Test acceptance requirements are in the RLD, HOP, PJM, and PJV system descriptions (24590-HLW-3YD-HOP-00001; 24590-HLW-3YD-HPH-00001; 24590-HLW-3YD-50-00003; 24590-HLW-3YD-50-00003; 24590-HLW-3YD-RLD-00001). The verification requirements will be defined in the requirements verification matrix in the system descriptions. This is not yet produced as a project document.
Y	Lab-scale similar system tested with limited range of actual wastes, if applicable	The project made the decision that they did not need to test at the laboratory-scale because AEA had done significant testing (24590-QL-POA-MFAO-00001-10-00001).
Y	Interfaces between components/subsystems in testing are realistic (benchtop with realistic interfaces)	Benchtop testing with realistic interfaces includes past experience at 336 Advanced Product Evaluation Laboratory (APEL) testing (24590-101-TSA-W000-0004-99-00010; 24590-101-TSA-W000-0004-114-00016; 24590-101-TSA-W000-0004-153-00002; 24590-101-TSA-W000-0004-153-00002; 24590-101-TSA-W000-0004-150-00003; 24590-101-TSA-W000-0004-114-00019; 24590-101-TSA-W000-0004-165-00001). The PJM, RLD, and HOP vessel systems are based upon design concepts demonstrated in nuclear facilities operated at the Sellafield site (24590-CM-TSA-HXYG.0008).

Table C.7. (cont'd)

Criteria Satisfied (Y/N)	Criteria	Basis for Completion
Y	Significant engineering and design changes	The project is in the detailed design phase. Design documentation is provided in the RLD, HOP, PJM, and PJV system descriptions (24590-HLW-3YD-HOP-00001; 24590-HLW-3YD-HPH-00001; 24590-HLW-3YD-50-00003; 24590-HLW-3YD-50-00003; 24590-HLW-3YD-RLD-00001).
Y	Prototypes of equipment system components have been created (know how to make equipment)	Small-scale prototypes have been created. The PJM, RLD, and HOP vessel system are based upon design concepts demonstrated in nuclear facilities operated at the Sellafield site (24590-CM-TSA-HXYG.0008).
Y	Tooling and machines demonstrated in lab for new manufacturing processes to make component	Small-scale prototypes have been created. The PJM, RLD, and HOP vessel system are based upon design concepts demonstrated in nuclear facilities operated at the Sellafield site (24590-CM-TSA-HXYG.0008).
Y	High-fidelity lab integration of system completed, ready for test in relevant environments	Small-scale prototypes have been created for the purposes of PJM testing. The PJM, RLD, and HOP vessel systems are based upon design concepts demonstrated in nuclear facilities operated at the Sellafield site (24590-CM-TSA-HXYG.0008).
Y	Design techniques have been defined to the point where largest problems defined	The WTP Contractor has conducted an engineering evaluation of the ability of the PJM mixed vessels in the HLW Facility to suspend solids (CCN:150383). The assessment used a correlation for mixing provided by BHR Group Limited (FMP 064) that provided guidance on the sizing of fluid jets (e.g., applicable to PJM nozzle and discharge sizing) to suspend solids. This initial assessment indicates that the mixing capability of the PJMs in the HLW Facility vessels (HOP-VSL-00903; HOP-VSL-00904; RLD-VSL-00007; RLD-VSL-00008) is adequate.
Y	Lab-scale similar system tested with range of simulants	The mixing report from the vendor with simulants demonstrates the feasibility of the system design (24590-QL-POA-MFAO-00001-10-00001). R&T testing of the mixing system was conducted at SRTC (SCT-M0SRLE60-00-132-05; -187-02, Rev. 00C (cleared)).
Y	Fidelity of system mock-up improves from laboratory to bench-scale testing	The mixing report from the vendor demonstrates the feasibility of the system design (24590-QL-POA-MFAO-00001-10-00001). R&T testing of the mixing system at SRTC (SCT-M0SRLE60-00-132-05; -187-02).
Y	Reliability, Availability, Maintainability Index (RAMI) target levels identified	RAMI targets have been established in WTP Basis of Design for HLW Vitrification Facility (24590-WTP-DB-ENG-01-001, Rev. 1C). The 2005 WTP Operational Research Assessment Report (24590-WTP-RPT-PO-05-001, Rev. 0) documents acceptability of the design concept. For the black cells, there are redundant systems and the systems have a 40-year lifetime. If there is a seismic event, all systems will be shut down. The failures are assumed to be minimal. There are very few parts that require maintenance.
Y	Some special purpose components combined with available laboratory components for testing	Small-scale tests were done for purposes of establishing the 336 APEL test setup (24590-101-TSA-W000-0004-124-03; 24590-101-TSA-W000-0004-72-08).

Table C.7. (cont'd)

Criteria Satisfied (Y/N)	Criteria	Basis for Completion
Y	Three dimensional drawings and piping and instrumentation diagrams (P&ID) have been prepared	P&IDs are done and listed in the RLD, HOP, PJM, and PJV system descriptions (24590-HLW-3YD-HOP-00001; 24590-HLW-3YD-HPH-00001; 24590-HLW-3YD-50-00003; 24590-HLW-3YD-50-00003; 24590-HLW-3YD-RLD-00001).
Y	Laboratory environment for testing modified to approximate operational environment	The project made the decision that they did not need to test at the laboratory-scale because AEA had done significant testing (24590-QL-POA-MFAO-00001-10-00001). The bench-scale testing environment is prototypic of the operational environment.
Y	Component integration issues and requirements identified	Component integrations have been addressed in Section 9 of the RLD, HOP, PJM, and PJV system descriptions (24590-HLW-3YD-HOP-00001; 24590-HLW-3YD-HPH-00001; 24590-HLW-3YD-50-00003; 24590-HLW-3YD-50-00003; 24590-HLW-3YD-RLD-00001).
Y	Detailed design drawings have been completed to support specification of pilot testing system	The project is in the detailed design phase. Design documentation is provided in the RLD, HOP, PJM, and PJV system descriptions (24590-HLW-3YD-HOP-00001; 24590-HLW-3YD-HPH-00001; 24590-HLW-3YD-50-00003; 24590-HLW-3YD-50-00003; 24590-HLW-3YD-RLD-00001).
Y	Requirements definition with performance thresholds and objectives established for final plant design	Requirements have been addressed in Section 9 of the RLD, HOP, PJM, and PJV system descriptions (24590-HLW-3YD-HOP-00001; 24590-HLW-3YD-HPH-00001; 24590-HLW-3YD-50-00003; 24590-HLW-3YD-50-00003; 24590-HLW-3YD-RLD-00001). Performance criteria for PJM mixing in the HLW vessels has recently been established (24590-WTP-RPT-PR-07-003) to support definition of a testing program to validate the adequacy of the PJMs in the HLW vessels to: blend liquids and solids, maintain solids in suspension and re-suspend settled solids.
Y	Preliminary technology feasibility engineering report completed	The preliminary feasibility is documented by the body of knowledge of PJM testing (24590-101-TSA-W000-0004-99-00010; 24590-101-TSA-W000-0004-114-00016; 24590-101-TSA-W000-0004-153-00002; 24590-101-TSA-W000-0004-153-00002; 24590-101-TSA-W000-0004-150-00003; 24590-101-TSA-W000-0004-114-00019; 24590-101-TSA-W000-0004-165-00001).
Y	Integration of modules/functions demonstrated in a laboratory/bench-scale environment	Integration of modules is demonstrated in the R&T reports (24590-101-TSA-W000-0004-99-00010; 24590-101-TSA-W000-0004-114-00016; 24590-101-TSA-W000-0004-153-00002; 24590-101-TSA-W000-0004-153-00002; 24590-101-TSA-W000-0004-150-00003; 24590-101-TSA-W000-0004-114-00019; 24590-101-TSA-W000-0004-165-00001).
Y	Formal control of all components to be used in final system	A test specification and test plan was generated by the project (24590-101-TSA-W000-0004-114-00019). The WTP work processes are also controlled by a configuration management plan (24590-WTP-PL-MG-01-002).

Table C.7. (cont'd)

Criteria Satisfied (Y/N)	Criteria	Basis for Completion
Y	Configuration management plan in place	The WTP work processes are also controlled by a configuration management plan (24590-WTP-PL-MG-01-002).
Y	Risk management plan documented	WTP Project has established a risk management plan (24590-WTP-RPT-PR-01-006).
Y	Individual process and equipment functions tested to verify that they work (e.g., test reports)	Testing of modules is demonstrated in the R&T reports (24590-101-TSA-W000-0004-99-00010; 24590-101-TSA-W000-0004-114-00016; 24590-101-TSA-W000-0004-153-00002; 24590-101-TSA-W000-0004-153-00002; 24590-101-TSA-W000-0004-150-00003; 24590-101-TSA-W000-0004-114-00019; 24590-101-TSA-W000-0004-165-00001).

Table C.8. Technology Readiness Level 6 Summary for HLW Pulse Jet Mixer (PJM) System and Radioactive Liquid Waste Disposal System (RLD)

Criteria Satisfied (Y/N)	Criteria	Basis for Completion
Y	Performance and behavior of subcomponent interactions understood (including tradeoffs)	The PJM is a standard design based on the PJM system at Sellafield (24590-CM-TSA-HXYG.0008). An experimental program was initiated by BNI to look at non Newtonian vessels (24590-101-TSA-W000-0004-124-03; 24590-101-TSA-W000-0004-72-08; 24590-101-TSA-W000-0004-118-02; 24590-101-TSA-W000-0004-149-00001; 24590-101-TSA-W000-0004-99-00011; 24590-101-TSA-W000-0004-99-00010; -99-00010; 24590-101-TSA-W000-0004-172-00001; 24590-101-TSA-W000-0004-114-00016). In 2003, both RLD vessels were modeled, and the models concluded that all solids could be suspended (24590-HLW-RPT-M-03-005; 294950-HLW-RPT-M-03-004). Additional computation fluid dynamic reports are listed in Section 10.2.4 of the PJM system description (24590-WTP-3YD-50-00003). Simulants used for mixer testing are described in SCT-M0SRLE60-00-193-02.
Y	Reliability, Availability, Maintainability Index (RAMI) levels established	RAMI targets have been established in WTP Basis of Design for HLW Vitrification Facility (24590-WTP-DB-ENG-01-001). The 2005 WTP Operational Research Assessment Report (24590-WTP-RPT-PO-05-001) documents acceptability of the design concept. For the black cells, there are redundant systems and the systems have a 40-year lifetime. If there is a seismic event, all systems will be shut down.
Y	Frequent design changes occur	The final design of the equipment has been completed. Most drawings and calculations are identified in the PJM system description (24590-HLW-3YD-50-00003).
Y	Draft design drawings for final plant system are nearly complete	The final design of the equipment is completed by the vendor. Most preliminary drawings and calculations are identified in the PJM system description (24590-HLW-3YD-50-00003).
Y	Operating environment for final system known	The operating environment for the HFP system is specified in the WTP Basis of Design (24590-WTP-DB-ENG-01-001, Rev. 1C), the PJM system description (24590-HLW-3YD-50-00003), and the HLW PSAR (24590-WTP-PSAR-ESH-01-002-03).
Y	Collection of actual maintainability, reliability, and supportability data has been started	RAMI data is included the RAMI Assessment Report (24590-HLW-RPT-PO-05-0001, Rev. 0) and the 2005 WTP Operational Research Assessment Report (24590-WTP-RPT-PO-05-001, Rev. 0). This information is based on testing results of similar equipment and literature reviews of applicable designs.
Y	Estimated cost of the system design is identified	The cost of the PJM system and RLD is provided in the May 2006 WTP Estimate at Completion (24590-WTP-CE-PC-06-001, Rev. 0).

Table C.8. (cont'd)

Criteria Satisfied (Y/N)	Criteria	Basis for Completion
N	Engineering-scale similar system tested with a range of simulants	The preliminary feasibility is documented by the body of knowledge of PJM testing (24590-101-TSA-W000-0004-99-00010; 24590-101-TSA-W000-0004-114-00016; 24590-101-TSA-W000-0004-153-00002; 24590-101-TSA-W000-0004-153-00002; 24590-101-TSA-W000-0004-150-00003; 24590-101-TSA-W000-0004-114-00019; 24590-101-TSA-W000-0004-165-00001). A mixing report from the vendor demonstrates adequacy of system design (24590-QL-POA-MFAO-00001-10-00001). The R&T testing of the mixing system has been completed. A recent review of the WTP flowsheet (CCN:132846) identified potential design issues with the PJM mixed vessels containing Newtonian process wastes. These issues include a design basis that discounts the effects of large particles and of rapidly settling Newtonian slurries. There is also insufficient testing of the selected designs. In response to this issue, the WTP Contractor has established a plan (24590-WTP-PL-ENG-06-0013) for testing to evaluate the mixing behavior of vessels that are anticipated to contain Newtonian fluids.
Y	Modeling and simulation used to simulate system performance in an operational environment	The performance of the PJM system has been modeled using the Tank Utilization Assessment Model (24590-WTP-RPT-PO-05-008, Rev. 0) and the Mass Balance Model (24590-WTP-RPT-PO-05-009, Rev. 0). The WTP Contractor has conducted an engineering evaluation of the ability of the PJM mixed vessels in the HLW Facility to suspend solids (CCN:150383). The assessment used a correlation for mixing provided by BHR Group Limited (FMP 064) that provided guidance on the sizing of fluid jets (e.g., applicable to PJM nozzle and discharge sizing) to suspend solids. This initial assessment indicates that the mixing capability of the PJMs in the HLW Facility vessels (HOP-VSL-00903; HOP-VSL-00904; RLD-VSL-00007; RLD-VSL-00008) is adequate.
N	Plan for demonstration of prototypical equipment and process testing completed, results verify design	Testing of the PJMs to mixed Newtonian fluids is planned as part of the resolution of the EFRT issue M3, "Inadequate Mixing System." Testing is scheduled for completion in fiscal year (FY) 2007 (24590-WTP-PL-ENG-06-0013).
N	Operating limits determined using engineering-scale system (from design, safety, environmental compliance)	The operating conditions for the PJM system have been established based upon engineering analysis presented in the PJM system description (24590-HLW-3YD-50-00003), and the testing reports identified in the response to the first question of Table C.8. A recent review of the WTP flowsheet (CCN:132846) identified potential design issues with the PJM mixed vessels containing Newtonian process wastes. These issues include a design basis that discounts the effects of large particles and of rapidly settling Newtonian slurries. There is also insufficient testing of the selected designs. In response to this issue, the WTP Contractor has established a plan (24590-WTP-PL-ENG-06-0013) for testing to evaluate the mixing behavior of vessels that are anticipated to contain Newtonian fluids.

Table C.8. (cont'd)

Criteria Satisfied (Y/N)	Criteria	Basis for Completion
Y	Operational requirements document available	The minimum operating requirements for the PJM system are defined in the WTP Operations Requirements Document (24590-WTP-RPT-OP-01-001), and the RLD, HOP, PJM, and PJV system descriptions (24590-HLW-3YD-HOP-00001; 24590-HLW-3YD-HPH-00001; 24590-HLW-3YD-50-00003; 24590-HLW-3YD-50-00003; 24590-HLW-3YD-RLD-00001).
Y	Off-normal operating responses determined for engineering-scale system	An initial assessment of off-normal operations along with corrective actions is identified in the specification for the upcoming QARD testing (VSL-06T1000-1). Off-normal operating responses are discussed in the RLD, HOP, PJM, and PJV system descriptions (24590-HLW-3YD-HOP-00001; 24590-HLW-3YD-HPH-00001; 24590-HLW-3YD-50-00003; 24590-HLW-3YD-50-00003; 24590-HLW-3YD-RLD-00001).
Y	System technical interfaces defined	The identification of the technical interface requirements is included in Section 9 of the RLD, HOP, PJM, and PJV system descriptions (24590-HLW-3YD-HOP-00001; 24590-HLW-3YD-HPH-00001; 24590-HLW-3YD-50-00003; 24590-HLW-3YD-50-00003; 24590-HLW-3YD-RLD-00001)
N	Component integration demonstrated at an engineering scale	Engineering-scale testing has been document in the 336 APEL testing reports in the response to the first question of Table C.8 for non-Newtonian fluids. Component integration is demonstrated in reports from the vendor (24590-QL-POA-MFAO-00001-10-00001). A recent review of the WTP flowsheet (CCN:132846) identified potential design issues with the PJM mixed vessels containing Newtonian process wastes. These issues include a design basis that discounts the effects of large particles and of rapidly settling Newtonian slurries. There is also insufficient testing of the selected designs. In response to this issue, the WTP Contractor has established a plan (24590-WTP-PL-ENG-06-0013) for testing to evaluate the mixing behavior of vessels that are anticipated to contain Newtonian fluids.
Y	Scaling issues that remain are identified and supporting analysis is complete	No scaling issues remain for the vessels and PJMs.
Y	Analysis of project timing ensures technology will be available when required	The May 2006 WTP Estimate at Completion (24590-WTP-CE-PC-06-001, Rev. 0) provides an integrated schedule showing how the PJM technology will be incorporated into the HLW Vitrification Facility. Technology availability does not constrain this schedule.
Y	Have begun to establish an interface control process	Identification of the technical interface requirements is included in Section 9 of the RLD, HOP, PJM, and PJV system descriptions (24590-HLW-3YD-HOP-00001; 24590-HLW-3YD-HPH-00001; 24590-HLW-3YD-50-00003; 24590-HLW-3YD-50-00003; 24590-HLW-3YD-RLD-00001).
Y	Acquisition program milestones established for start of final design (CD-2)	The May 2006 WTP Estimate at Completion (24590-WTP-CE-PC-06-001, Rev. 0) provides an integrated schedule showing how the PJM technology will be incorporated into the HLW Vitrification Facility. Technology availability does not constrain this schedule.

Table C.8. (cont'd)

Criteria Satisfied (Y/N)	Criteria	Basis for Completion
Y	Critical manufacturing processes prototyped	RLD and PJM system design is based upon existing technology, commonly fabricated equipment. Some vessels (HOP-VSL-00903; HOP-VSL-00904; RLD-VSL-00007; RLD-VSL-00008) are already fabricated.
Y	Most pre-production hardware is available to support fabrication of the system	RLD and PJM system design is based upon existing technology, commonly fabricated equipment. Some vessels (HOP-VSL-00903; HOP-VSL-00904; RLD-VSL-00007; RLD-VSL-00008) are already fabricated.
N	Engineering feasibility fully demonstrated (e.g., will it work?)	Engineering-scale testing has been document in the 336 APEL testing reports in the response to the first question of Table C.8 for non-Newtonian fluids. Component integration is demonstrated in reports from the vendor (24590-QL-POA-MFAO-00001-10-00001). A recent review of the WTP flowsheet (CCN:132846) identified potential design issues with the PJM mixed vessels containing Newtonian process wastes. These issues include a design basis that discounts the effects of large particles and of rapidly settling Newtonian slurries. There is also insufficient testing of the selected designs. In response to this issue, the WTP Contractor has established a plan (24590-WTP-PL-ENG-06-0013) for testing to evaluate the mixing behavior of vessels that are anticipated to contain Newtonian fluids.
Y	Materials, process, design, and integration methods have been employed (e.g., can design be produced?)	PJM system design is based upon existing technology and standard industry components. Vessels for the RLD have been fabricated.
Y	Technology "system" design specification complete and ready for detailed design	The design of the plant-scale system has been completed (design drawings).
Y	Components are functionally compatible with operational system	PJMs and supporting systems for process air and ventilation air have been integrated with the HLW Facility design.
N	Engineering-scale system is high-fidelity functional prototype of operational system	In response to this issue, the WTP Contractor has established a plan (24590-WTP-PL-ENG-06-0013) for testing to evaluate the mixing behavior of vessels that are anticipated to contain Newtonian fluids.
Y	Formal configuration management program defined to control change process	WTP engineering processes include procedures for preparation of engineering drawings (24590-WTP-3DP-G04B-00046); review of engineering documents (24590-WTP-3DP-G04T-00913; Rev. 5); design change control (24590-WTP-3DP-G04T-00901; Rev. 10); design verification (24590-WTP-3DP-G04B-00027; Rev. 8); and other engineering department procedures. WTP work processes are also controlled by a configuration management plan (24590-WTP-PL-MG-01-002, Rev. 4).

Table C.8. (cont'd)

Criteria Satisfied (Y/N)	Criteria	Basis for Completion
N	Integration demonstrations have been completed (e.g., construction of testing system)	Test reports for the PJM vessels are identified in the response to the first question for Table C.8. There is also insufficient testing of the selected designs. The WTP Contractor has identified the need to complete additional testing to demonstrate the ability of the PJMs to mix and re-suspend solids for low solids containing solutions. This work is scheduled to be complete in late 2007.
Y	Final Technical Report on Technology completed	Test reports for the PJM vessels are identified in the response to the first question for Table C.8. There is also insufficient testing of the selected designs. The WTP Contractor has identified the need to complete additional testing to demonstrate the ability of the PJMs to mix and re-suspend solids for low solids containing solutions. This work is scheduled to be complete in late 2007. In response to this issue, the WTP Contractor has established a plan (24590-WTP-PL-ENG-06-0013) for testing to evaluate the mixing behavior of vessels that are anticipated to contain Newtonian fluids.
N	Waste processing issues have been identified and major ones have been resolved	The WTP Contractor has identified the need to complete additional testing to demonstrate the ability of the PJMs to mix and re-suspend solids for low solids containing solutions. This work is scheduled to be complete in late 2007.
Y	Process and tooling are mature to support fabrication of components/system	The PJM is a standard design based on the PJM system at Sellafield (24590-CM-TSA-HXYG.0008). A majority of the plant equipment has been fabricated at least once.
Y	Production demonstrations are complete (at least one time)	The PJM is a standard design based on the PJM system at Sellafield (24590-CM-TSA-HXYG.0008). A majority of the plant equipment has been fabricated at least once.

References

1. 24590-101-TSA-W000-00009-098-00009, *Final Report - Development of Phase 1 IHLW Models for PCT Response and One-Percent Crystal Fraction Temperature (T1%)*, April 21, 2005, Bechtel National, Inc., Richland, Washington.
2. 24590-101-TSA-W000-00009-106-00021, Rev. 00A, *Final Report - DM100 HLW Simulant Validation Tests with C-106/AY-102 Feeds*, June 14, 2005, Bechtel National, Inc., Richland, Washington.
3. 24590-101-TSA-W000-0004-113-02, Rev. 00B, *Evaluation of Corona Oxidation as Back-up Technology for Organic Destruction in the Secondary Offgas Treatment System*, May 8, 2003, Bechtel National, Inc., Richland, Washington.
4. 24590-101-TSA-W000-0004-114-00016, Rev. 00A, *Technical Basis for Testing Scaled Pulse Jet Mixing Systems for Non-Newtonian Slurries*, March 15, 2005, Bechtel National, Inc., Richland, Washington.
5. 24590-101-TSA-W000-0004-114-00018, Rev. 00B, *Technical Basis for Predicting Mixing and Flammable Gas Behavior in the Ultrafiltration Feed Process and High-Level Waste Lag Storage Vessels with Non-Newtonian Slurries*, January 20, 2006, Bechtel National, Inc., Richland, Washington.
6. 24590-101-TSA-W000-0004-114-00019, Rev. 00B, *Overview of the Pulse Jet Mixer Non-Newtonian Scaled Test Program*, January 20, 2006, Bechtel National, Inc., Richland, Washington.
7. 24590-101-TSA-W000-0004-118-02, Rev. 00B, *Large Tank Experimental Data for Validation for the FLUENT CFD Model of Pulsed Jet Mixers*, July 7, 2003, Bechtel National, Inc., Richland, Washington.
8. 24590-101-TSA-W000-0004-124-03, Rev. 00B, *Demonstration of Ability to Mix in a Small-Scale Pulsed-Jet Mixer Test Facility*, March 13, 2003, Bechtel National, Inc., Richland, Washington.
9. 24590-101-TSA-W000-0004-125-02, Rev. 00B, *The Corrosion Effects of Mercury and Mercury Compounds on WTP Materials: Electrochemical Tests*, March 24, 2003, Bechtel National, Inc., Richland, Washington.
10. 24590-101-TSA-W000-0004-139-01, Rev. 00B, *Chemical Analysis and Physical Property Testing of 241-AP-104 Tank Waste*, October 2, 2003, Bechtel National, Inc., Richland, Washington.
11. 24590-101-TSA-W000-0004-144-01, Rev. 00B, *Rheological and Physical Properties of AZ-101 HLW Pretreated Sludge and Melter Feed,* January 8, 2004, Bechtel National, Inc., Richland, Washington.
12. 24590-101-TSA-W000-0004-150-00003, Rev. 00A, *Gas Generation Testing and Support for the Hanford Waste Treatment and Immobilization Plant*, June 24, 2004, Bechtel National, Inc., Richland, Washington.
13. 24590-101-TSA-W000-0004-153-00002, Rev. 00A, *Interim Report: Gas Retention and Release in Pulse Jet Mixed Tanks Containing Non-Newtonian Waste Simulants*, August 31, 2004, Bechtel National, Inc., Richland, Washington.
14. 24590-101-TSA-W000-0004-153-00002, Rev. 00B, *Final Report: Gas Retention and Release in Hybrid Pulse Jet Mixed Tanks Containing Non-Newtonian Waste Simulants*, March 22, 2005, Bechtel National, Inc., Richland, Washington.

15. 24590-101-TSA-W000-0004-160-00001, Rev. 00A, *Technical Basis for Scaling of Air Sparging Systems for Mixing in Non-Newtonian Slurries*, March 4, 2005, Bechtel National, Inc., Richland, Washington.

16. 24590-101-TSA-W000-0004-165-00001, Rev. 00B, *Hybrid Mixing System Test Results for Prototype Ultrafiltration Feed Process and High-Level Waste Lag Storage Vessels,* April 21, 2005, Bechtel National, Inc., Richland, Washington.

17. 24590-101-TSA-W000-0004-172-00001, Rev. 00A, *Final Report: Technical Basis for HLW Vitrification Stream Physical and Rheological Property Bounding Conditions*, January 5, 2006, Bechtel National, Inc., Richland, Washington.

18. 24590-101-TSA-W000-0004-72-08, Rev. 00B, *Results of Small-Scale Particle Cloud Tests and Non-Newtonian Fluid Cavern Tests*, November 19, 2003, Bechtel National, Inc., Richland, Washington.

19. 24590-101-TSA-W000-0004-99-00010, Rev. 00A; -99-00010, Rev. 00B (published), *Non-Newtonian Slurry Simulant Development and Selection for Pulse Jet Mixer Testing*, August 17, 2004, Bechtel National, Inc., Richland, Washington.

20. 24590-101-TSA-W000-0004-99-00011, Rev. 00A, *Test Results for Pulse Jet Mixers in Prototypic Ultrafiltration Feed Process and High-Level Waste Lag Storage Vessels*, August 17, 2004, Bechtel National, Inc., Richland, Washington.

21. 24590-101-TSA-W000-0009-101-00007, *RPP-WTP Pilot Melter Prototypic LAW Container and HLW Canister Glass Fill Test Results Report*, May 26, 2004, Bechtel National, Inc., Richland, Washington.

22. 24590-101-TSA-W000-0009-102-01, *Compositional Variation Tests on DuraMelter 100 with LAW Sub-Envelope A3 Feed in Support of the LAW Pilot Melter*, March 7, 2003, Bechtel National, Inc., Richland, Washington.

23. 24590-101-TSA-W000-0009-105-04, *Summary Report - Augmentation Test Matrix to Support TCLP Model Development for RPP-WTP HLW Glasses*, December 9, 2003, Bechtel National, Inc., Richland, Washington.

24. 24590-101-TSA-W000-0009-118-00009, Rev. 00A, *Final Report: Integrated DM1200 Melter Testing of Redox Effects Using HLW AZ-101 and C 106/AY-102 Simulants*, May 6, 2004, Bechtel National, Inc., Richland, Washington.

25. 24590-101-TSA-W000-0009-118-00010, *Final Report - ADS Pump Testing as Part of Integrated DM1200 Testing of HLW Compositions Using Bubblers*, May 24, 2004, Bechtel National, Inc., Richland, Washington.

26. 24590-101-TSA-W000-0009-119-00003, Rev. B, *Final Report - High-Level Waste Melter System Materials of Construction Testing,* July 22, 2002, Bechtel National, Inc., Richland, Washington.

27. 24590-101-TSA-W000-0009-121-00006, Rev. 00A, *Modeling the Behavior of Noble Metals During HLW Vitrification in the DM1200 Melter*, May 25, 2005, Bechtel National, Inc., Richland, Washington.

28. 24590-101-TSA-W000-0009-144-00005, Rev. 00A, *Final Report - DM1200 Tests with AZ-101 HLW Simulants*, February 26, 2004, Bechtel National, Inc., Richland, Washington.

29. 24590-101-TSA-W000-0009-144-00006, Rev. 00A, *Final Report - Integrated DM1200 Melter Testing Using AZ-102 and C-106/AY-102 HLW Simulants: HLW Simulant Verification*, July 27, 2005, Bechtel National, Inc., Richland, Washington.

30. 24590-101-TSA-W000-0009-144-01, *Integrated DM1200 Melter Testing of HLW C-106/AY-102 Composition Using Bubblers,* October 17, 2003, Bechtel National, Inc., Richland, Washington.

31. 24590-101-TSA-W000-0009-144-02, Rev. 00B, *Final Report - Integrated DM1200 Melter Testing of HLW AZ-102 Composition Using Bubblers*, October 17, 2003, Bechtel National, Inc., Richland, Washington.

32. 24590-101-TSA-W000-0009-144-03, Rev. 00B, *Noble Metals Testing on the DM1200 Pilot Melter System with AZ-101 HLW Simulants*, December 31, 2003, Bechtel National, Inc., Richland, Washington.

33. 24590-101-TSA-W000-0009-153-00001, Rev. 00A, *Final Report - High-Level Waste Melter Alternate Bubbler Configuration Testing*, June 29, 2004, Bechtel National, Inc., Richland, Washington.

34. 24590-101-TSA-W000-0009-156-00001, *Final Report - Regulatory Testing of RPP-WTP HLW Glasses to Support Delisting Compliance (plus CD with Appendices)*, October 14, 2004, Bechtel National, Inc., Richland, Washington.

35. 24590-101-TSA-W000-0009-157-00002, *Final Report - DM100 HLW and LAW Tests of the Influence of Technetium on Cesium Volatility Using Rhenium as a Technetium Surrogate*, October 15, 2004, Bechtel National, Inc., Richland, Washington.

36. 24590-101-TSA-W000-0009-158-00001, *Final Report - Integrated DM1200 Melter Testing of Bubbler Configurations Using HLW AZ-101 Simulants*, October 15, 2004, Bechtel National, Inc., Richland, Washington.

37. 24590-101-TSA-W000-0009-162-00001, Rev. 00A, *Investigation of Glass Bubbling and Increased Production Rate (Proprietary Data)*, October 28, 2004, Bechtel National, Inc., Richland, Washington.

38. 24590-101-TSA-W000-0009-164-00001, M*odeling of HLW Melter with Revised Bubbler Design and Noble Metals*, October 12, 2005, Bechtel National, Inc., Richland, Washington.

39. 24590-101-TSA-W000-0009-165-00001, *Preparation and Testing of HLW Matrix Glasses to Support WTP Property-Composition Model Development Final Report,* October 24, 2005, Bechtel National, Inc., Richland, Washington.

40. 24590-101-TSA-W000-0009-166-00001, Rev. 00B, *Regulatory Offgas Emissions Testing on the DM1200 Melter System Using HLW and LAW Simulants,* November 11, 2005, Bechtel National, Inc., Richland, Washington.

41. 24590-101-TSA-W000-0009-168-00001, Rev. B, *Comparison of HLW Simulant, Actual Waste, and Melter Glasses*, December 7, 2005, Bechtel National, Inc., Richland, Washington.

42. 24590-101-TSA-W000-0009-171-00001, Rev. 00A, *Summary of DM1200 Operation at VSL*, October 10, 2006, Bechtel National, Inc., Richland, Washington.

43. 24590-101-TSA-W000-0009-172-00001, Rev. 00A, *Review of Properties of Simulated Feeds Used for Melter Testing*, September 26, 2006, Bechtel National, Inc., Richland, Washington.

44. 24590-101-TSA-W000-0009-174-00001, Rev. 00A, *Summary of DM1200 WESP History and Performance*, August 7, 2006, Bechtel National, Inc., Richland, Washington.

45. 24590-101-TSA-W000-0009-23-09, Rev. 00C, *RPP-WTP Pilot Melter Bubbler Consumable Changeout Box Test Results Report*, August 20, 2003, Bechtel National, Inc., Richland, Washington.

46. 24590-101-TSA-W000-0009-23-10, Rev. 00C, *RPP-WTP Pilot Melter Bubbler Life Extension Test Results Report*, January 7, 2004, Bechtel National, Inc., Richland, Washington.

47. 24590-101-TSA-W000-0009-34-03, Rev. 00C, *Final Report: Tests on the DuraMelter 1200 HLW Pilot Melter System Using AZ-101 HLW Simulants*, June 11, 2002, Bechtel National, Inc., Richland, Washington.

48. 24590-101-TSA-W000-0009-48-01, Rev. 00C, *Final Report - Melter Tests with AZ-101 HLW Simulant Using a DuraMelter 100 Vitrification System*, July 31, 2003, Bechtel National, Inc., Richland, Washington.

49. 24590-101-TSA-W000-0009-54-00001, Rev. 00C, *Final Report - Submerged Bed Scrubber (SBS): Off-line Component Testing of DM1200 SBS Unit*, August 30, 2004, Bechtel National, Inc., Richland, Washington.

50. 24590-101-TSA-W000-0009-64-00003, *Final Report - HLW Glass Formulation to Support C-106/AY-102 Actual Waste Testing*, August 17, 2004, Bechtel National, Inc., Richland, Washington.

51. 24590-101-TSA-W000-0009-72-05, *Final Report - Regulatory Spike Testing for RPP-WTP LAW and HLW Glasses for Compliance with Land Disposal Restrictions*, August 8, 2003, Bechtel National, Inc., Richland, Washington.

52. 24590-101-TSA-W000-0009-72-08, *Final Report - Regulatory Testing of WTP HLW Glasses for Compliance with Delisting Requirements*, October 28, 2004, Bechtel National, Inc., Richland, Washington.

53. 24590-101-TSA-W000-0009-74-01, *Start-up and Commissioning Tests on the DuraMelter 1200 HLW Pilot Melter System Using AZ-101 HLW Simulants,* August 29, 2005, Bechtel National, Inc., Richland, Washington.

54. 24590-101-TSA-W000-0009-82-02, *Glass Formulation to support Melter Runs with HLW Simulants*, October 6, 2003, Bechtel National, Inc., Richland, Washington.

55. 24590-101-TSA-W000-0009-87-09, Rev. 00B, *Off-line Tests of the DM1200 Thermal Catalytic Oxidation (TCO) Unit*, April 17, 2003, Bechtel National, Inc., Richland, Washington.

56. 24590-101-TSA-W000-0009-98-07, Rev. 00C, *Final Report: DM1200 Tests with C-104/AY-101 HLW Simulants*, December 4, 2003, Bechtel National, Inc., Richland, Washington.

57. 24590-101-TSA-W000-0010-06-04A, *Glass Formulation and Testing With RPP-WTP HLW Simulants*, July 26, 2002, Bechtel National, Inc., Richland, Washington.

58. 24590-CM-TSA-HXYG.0008, *Technical Basis for River Protection Project Waste Treatment Plant (RPP-WTP)-Power Fluidics System Design*, September 6, 2001, Bechtel National, Inc., Richland, Washington.

59. 24590-HLW-3YD-HDH-00002, *System Description of HLW System HDH Canister Decontamination Handling*, February 17, 2005, Bechtel National, Inc., Richland, Washington.

60. 24590-HLW-3YD-HEH-00001, *System Description for HLW System HEH Canister Export Handling*, January 19, 2005, Bechtel National, Inc., Richland, Washington.

61. 24590-HLW-3YD-HFP-00002, *System Description for HLW Concentrate Receipt and Melter Feed Process Systems (HCP and HPP)*, December 22, 2004, Bechtel National, Inc., Richland, Washington.

62. 24590-HLW-3YD-HMH-00001, *System Description for System HMH HLW Melter Transport,* January 9, 2007, Bechtel National, Inc., Richland, Washington.

63. 24590-HLW-3YD-HMP-00001, *System Description for HLW Melter Process System (HMP)*, May 22, 2006, Bechtel National, Inc., Richland, Washington.

64. 24590-HLW-3YD-HOP-00001, *Systems Description for HLW Melter Offgas Treatment Process and Process Vessel Vent Extraction (HOP and PVV Systems)*, November 14, 2002, Bechtel National, Inc., Richland, Washington.

65. 24590-HLW-3YD-HPH-00001, *System Description for HLW System HPH Canister Pour Handling*, February 1, 2005, Bechtel National, Inc., Richland, Washington.

66. 24590-HLW-3YD-PJV-00001, *System Description for the HLW Pulse Jet Ventilation System,* May 18, 2005, Bechtel National, Inc., Richland, Washington.

67. 24590-HLW-3YD-RLD-00001, *System Description for HLW Radioactive Liquid Waste Disposal (System RLD)*, May 18, 2005, Bechtel National, Inc., Richland, Washington.

68. 24590-HLW-MV-HOP-P0001, *Equipment Assembly SBS Condensate Receiver Vessel HOP-VSL-00903*, December 2004, Bechtel National, Inc., Richland, Washington.

69. 24590-QL-POA-MFAO-00001-10-00001, Rev. 00B, *Rotating Mechanical Agitators Test Report*, March 17, 2004, Bechtel National, Inc., Richland, Washington.

70. 24590-WTP-3DP-G04B-00027, Rev. 8, *Design Verification*, September 15, 2006, Bechtel National, Inc., Richland, Washington.

71. 24590-WTP-3DP-G04B-00046, Rev. 16, *Engineering Drawings*, November 7, 2006, Bechtel National, Inc., Richland, Washington.

72. 24590-WTP-3DP-G04T-00901, Rev. 10, *Design Change Control*, April 25, 2006, Bechtel National, Inc., Richland, Washington.

73. 24590-WTP-3DP-G04T-00913, Rev. 5, *Review of Engineering Documents*, August 28, 2006, Bechtel National, Inc., Richland, Washington.

74. 24590-WTP-3PS-MHSS-T0002, Rev. 0, *Engineering Specification for the Autosampling System (ASX)*, June 16, 2004, Bechtel National, Inc., Richland, Washington.

75. 24590-WTP-3YD-50-00003, Rev. A, *System Description for Pulse Jet Mixers and Supplemental Mixing Subsystems,* May 19, 2004, Bechtel National, Inc., Richland, Washington.

76. 24590-WTP-CE-PC-06-001, Rev. 0, *WTP Project Estimate at Completion*, May 31, 2006, Bechtel National, Inc., Richland, Washington.

77. 24590-WTP-DB-ENG-01-001, Rev. 1C, *WTP Basis of Design,* November 1, 2006, Bechtel National, Inc., Richland, Washington.

78. 24590-WTP-GPG-RTD-001, Rev. 0, *Guidelines for Performing Chemical, Physical, and Rheological Properties Measurements*, May 20, 2002, Bechtel National, Inc., Richland, Washington.

79. 24590-WTP-PL-ENG-06-0013, Rev. 000, *Issue Response Plan for Implementation of External Flowsheet Review Team (EFRT) recommendations-M3, Inadequate Mixing System Design*, September 8, 2006, Bechtel National, Inc., Richland, Washington.

80. 24590-WTP-PL-MG-01-002, Rev. 4, *WTP Configuration Management Plan*, May 16, 2006, Bechtel National, Inc., Richland, Washington.

81. 24590-WTP-PL-RT-01-002, Rev. 2, *WTP Research and Technology (R&T) Program Plan*, April 20, 2004, Bechtel National, Inc., Richland, Washington.

82. 24590-WTP-PSAR-ESH-01-002-04, Rev. 1, *Preliminary Safety Analysis Report to Support Construction Authorization; HLW Facility,* December 22, 2006, Bechtel National, Inc., Richland, Washington.

83. 24590-WTP-RPT-ENV-03-00005, Rev. 0, *4-9s Destruction and Removal Efficiency Assessment* , November 20, 2003, Bechtel National, Inc., Richland, Washington.

84. 24590-WTP-RPT-OP-01-001, Rev. 2, *Operations Requirements Document*, May 5, 2003, Bechtel National, Inc., Richland, Washington.

85. 24590-WTP-RPT-PO-05-001, Rev. 0, 2*005 WTP Operation Research Assessment*, August 29, 2005, Bechtel National, Inc., Richland, Washington.

86. 24590-WTP-RPT-PO-05-008, Rev. 0, *2005 WTP Tank Utilization Assessment*, August 8, 2005, Bechtel National, Inc., Richland, Washington.

87. 24590-WTP-RPT-PO-05-009, Rev. 0, *2005 WTP Material Balance and Process Flowsheet Assessment,* November 10, 2005, Bechtel National, Inc., Richland, Washington.

88. 24590-WTP-RPT-PR-01-006, Rev. 13, *WTP Risk Assessment Report,* May 31, 2006, Bechtel National, Inc., Richland, Washington.

89. 294950-HLW-RPT-M-03-004, Rev. 0, *CFD Modeling Report for WTP Vessel; RLD-VSL-00008*, August 22, 2003, Bechtel National, Inc., Richland, Washington.

90. 294950-HLW-RPT-M-03-005, Rev. 0, *CFD Modeling Report for WTP Vessel; RLD-VSL-00007*, August 22, 2003, Bechtel National, Inc., Richland, Washington.

91. CCN:078791, "Consideration on Melter Materials," February 24, 2005.

92. CCN:080128, Letter, from R. J. Schepens, DOE OW, to M. A. Wilson, Washington Department of Ecology, "Request for Concurrence with Principal Organic Dangerous Constituents (PODCs) for Demonstrating a 99.99 Percent Organic Destruction and Removal Efficiency (DRE)," 03-AMWTP-164, , December 17, 2003.

93. CCN:128559, "White Paper on the Analysis of Naphthalene Destruction and Removal Efficiency (DRE) Testing at the Vitreous State Laboratory (VSL)," December 15, 2005.

94. CCN:132846, "Report of External Flowsheet Review Team for the Hanford Waste Treatment and Immobilization Plant-Final Report Titled: 'Comprehensive Review of the Hanford Waste Treatment Plant Flowsheet and Throughput'," March 17, 2006.

95. CCN:144619, "EFRT M17: Evaluation of HLW Film Cooler Blockage Issues," December 22, 2006, Bechtel National, Inc., Richland, Washington..

96. CCN:150383, "Path Forward for EFRT Mixing Issue M3," January 11, 2007.

97. DE-AC27-01RL14136, *Waste Treatment and Immobilization Plant Contract*, December 1, 2005.

98. DOE O 413.3A, 2006, *Program and Project Management for the Acquisition of Capital Assets,* Change No. 1, U.S. Department of Energy, Office of Management, Budget and Evaluation, Washington, D.C..

99. FMP 064, *Jet Solid Suspension Design Guide*, November 1, 2005.

100. *Determination of Processing Rate of RPP-WTP HLW Simulants using a DuraMelter™ 1000 Vitrification System*, August 21, 2000.

101. *Test Plan: Pretreated Waste and Melter Feed Composition Variability Testing Using HLW and LAW Simulants*, September 29, 2006.

102. PNNL-13359, *Rheological Studies on Pretreated Feed and Melter Feed from C-104 and AZ-102*, January 1, 2001.

103. RPT-W375SH-TE00005, *Evaluation of Alternatives for Maintaining HLW/LAW Melter Offgas Systems Function Under Off-normal Conditions*, September 14, 1999.

104. SCT-M0SRLE60-00-110-17, Rev. 00B, *Compositing and Characterization of Samples from Hanford Tank 241-AY-102/C-106*, October 7, 2003.

105. SCT-M0SRLE60-00-132-05, Rev. 00C, *Pilot Scale Testing - Transport of HLW Glass Former Chemicals Proof of Principle Test Results (U)*, April 10, 2003.

106. SCT-M0SRLE60-00-187-02, Rev. 00B; -187-02, Rev. 00C (cleared), *Evaluation of Wetting Agents to Mitigate Dusting of Glass Forming Chemicals During Delivery to the Melter Feed Preparation Vessel (U)*, July 31, 2003.

107. SCT-M0SRLE60-00-187-02, Rev. 00C (cleared)), *Evaluation of Wetting Agents to Mitigate Dusting of Glass Forming Chemicals During Delivery to the Melter Feed Preparation Vessel (U)*, July 31, 2003.

108. SCT-M0SRLE60-00-193-02, Rev. 00A, *Development of Simulants to Support Mixing Tests for High Level Waste and Low Activity Waste*, December 31, 2003.

109. SCT-M0SRLE60-00-196-00001, Rev. 00B, *Foaming/Antifoaming in WTP Tanks Equipped with Pulse Jet Mixers and Air Spargers*, October 12, 2005.

110. SCT-M0SRLE60-00-21-05, Rev. 00B, *Crucible Scale Vitrification of Pretreated C-106 Sludge Mixed with Secondary Wastes*, August 8, 2002.

111. SCT-M0SRLE60-00-211-00001, Rev. 00A, *Physical Characterization of Vitreous State Laboratory AY102/C106 and AZ102 High Level Waste Melter Feed Simulants*, March 31, 2005.

112. SCT-M0SRLE60-00-218-00001, Rev. 00A, *Vitrification and Product Testing of AY-102/C-106 HLW (Env D) [U]*, November 16, 2005.

113. VSL-06T1000-1, *Test Plan Pretreated Waste and Melter Feed Composition Variability Testing Using HLW and LAW Simulants*, December 11, 2006.

Appendix D – Participants in the TRL Assessment

Appendix D – Participants in the TRL Assessment

Participants in the Technology Readiness Level (TRL) Assessment for the Waste Treatment and Immobilization Plant (WTP) High-Level Waste (HLW) Vitrification Facility for each individual critical system evaluated are identified in Table D.1.

The participants are divided into the Assessment Team and the WTP Project Technology and Engineering support teams.

The Assessment Team was compromised of staff and consultants representing the U.S. Department of Energy (DOE), Office of River Protection (ORP) (Hanford) and DOE Office of Environmental and Radioactive Waste Management (EM) Office of Project Recovery (Headquarters). The Assessment Team was also supported by William Nolte of the Air Force Research Laboratory, who developed the TRL Calculator used in this assessment.

The Assessment Team was assisted by WTP Project Technology and Engineering teams comprised of subject matter experts associated with the critical technology elements that were being evaluated. These subject matter experts were either responsible for testing the technologies or the incorporation of the technology design into the WTP. In general, technology testing is managed by staff from Washington Group International (WGI) and engineering of the systems is managed by staff from Bechtel National, Inc. (BNI).

Table D.1. Participants in the Technology Readiness Level Assessment for the HLW Waste Vitrification Facility

Name	Affiliation	Systems Evaluated			
		HLW Melter Feed Process System (HFP)	HLW Melter System (HMP)	HLW Melter Offgas Treatment Process System/Process Vessel Vent Exhaust System (HOP/PVV)	Pulse Jet Mixer (PJM) System/ Radioactive Liquid Waste System (RLD)
Assessment Team					
Alexander, Don	DOE/ORP	X	X	X	X
Babel, Carol	DOE/ORP	X	X		
Holton, Langdon	ORP-PNNL	X	X	X	X
Sutter, Herb	DOE EM Consultant	X	X	X	X
Young, Joan	ORP-PNNL	X	X	X	X
WTP Project Technology and Engineering					
Damerow, Fred	WGI-Process Technology	X	X	X	X
Hall, Mark	BNI-Melter Process Technology		X		
Perez, Joseph	WGI-Melter Process Technology	X			
Peters, Richard	BNI-Melter Process Engineering		X		
Petkus, Lawrence	WGI-Process Technology	X	X	X	
Rouse, Jim	BNI-HLW Process Engineering	X		X	X