Independent Technical Review Report: Oak Ridge Reservation

Review of the Environmental Management Waste Management Facility (EMWMF) at Oak Ridge

By Craig H. Benson, PhD, PE; William H. Albright, PhD; David P. Ray, PE; and John Smegal

Sponsored by:

The Office of Engineering and Technology (EM-20)

1 February 2008 (v3.0)

TABLE OF CONTENTS

1. INTRODUCTION 1

2. OBJECTIVE AND SCOPE 2

3. LINE OF INQUIRY NO. 1 2

4. LINE OF INQUIRY NO. 2 4

4.1 Compaction Testing of Soil and Debris Mixtures 5

4.2 Final Cover Settlement 6

5. LINE OF INQUIRY NO. 3 7

6. SUMMARY OF RECOMMENDATIONS 8

7. ACKNOWLEDGEMENT 10

8. REFERENCES 10

FIGURES 12

1. INTRODUCTION

The Environmental Management Waste Management Facility (EMWMF) is a land disposal facility authorized by the US Environmental Protection Agency (USEPA) and the Tennessee Department of Environment and Conservation (TDEC) for disposal of wastes generated by environmental restoration activities being conducted at the US Department of Energy's (DOE) Oak Ridge Reservation. Low-level radioactive wastes (LLRW), hazardous wastes defined in Subtitle C of the Resource Conservation and Recovery Act, and wastes defined by the Toxic Substances Control Act (TSCA) are approved for disposal in the EMWMF. Combinations of the aforementioned waste types ("mixed wastes") are also disposed in the EMWMF.

A schematic of the EMWMF is shown in plan view in Fig. 1. A photograph is shown in Fig. 2. The landfill consists of five cells with a waste depth up to 23 m. Cells 1-4 have a combined capacity (also referred to as 'air space') of 920,000 m^3. Cell 5, to be constructed in the future, will increase the total capacity to 1,300,000 m^3 (the capacity approved in the 1999 Record of Decision for the site). Construction of the cells has proceeded in phases, with construction of Cells 1 and 2 between January 2001-May 2002 (Phase 1) and construction of Cells 3 and 4 between June 2004 and April 2005 (Phase 2). Construction of Cell 5 is to commence in October 2008. Cell 5 is intended to be operational by October 2010 (Phase 3).

All of the cells are lined with a state-of-the-art double liner system (Fig. 3) consisting of a lower composite liner (1.5-mm-thick HDPE geomembrane over clay) and an upper geomembrane liner (1.5-mm-thick HDPE geomembrane). The base of the clay liner and the ground water table are separated by at least 3 m. The clay barrier in the composite liner is 915 mm thick and has a saturated hydraulic conductivity less than 10^{-7} cm/s. A geocomposite drainage layer (geonet sandwiched between two non-woven geotextiles) is used for leak detection between the two liners. Very conservative assumptions were employed when estimating releases from the liner to the subsurface.

A 305-mm-thick granular layer is used for leachate collection along the base of the cells and a geocomposite drainage layer is used for leachate collection on the slopes. The entire leachate collection system is covered with a 305-mm-thick soil protective layer. Leachate drains from the cells by gravity through double-wall HDPE pipes that penetrate the liner system. These pipes are routed to a lift station where leachate is collected and then pumped to storage tanks prior to disposal. Tanker trucks transport leachate from the storage tanks to a treatment facility on the Oak Ridge Reservation (Fig. 4).

After the EMWMF is filled, an engineered final cover will be installed that is intended to limit percolation to less than 10 mm/yr. A multi-layer cover design (Fig. 5) has been proposed that consists of the following layers (from bottom to top): a contour layer (interim cover soil to form

the base grade and to provide gas venting), a composite barrier layer consisting of 610 mm of clay overlain by a 1.0-mm-thick LLDPE geomembrane, a cushion geotextile, a 305-mm-thick granular drainage layer, a 915-mm-thick rip-rap biointrusion layer, a separating geotextile, a 305-mm-thick filter layer, and a 1.52-m-thick vegetated surface layer. The clay component of the composite barrier will consist of two layers, with the lower layer constructed from natural clay and the upper layer constructed with bentonite-amended clay. The vegetated surface layer will be amended with rock to improve erosion resistance.

2. OBJECTIVE AND SCOPE

DOE charged an Independent Technical Review (ITR) team with reviewing and critiquing operations at the EMWMF. The ITR team, which was comprised of Craig H. Benson, PhD, PE (University of Wisconsin; Madison, WI), William H. Albright, PhD (Desert Research Institute; Reno, NV), David P. Ray, PE (US Army Corps of Engineers; Omaha, NE), and John Smegal (Legin Group; Washington, DC), has expertise in waste containment, civil engineering, geotechnical engineering, and project management. The ITR team was requested to address three lines of inquiry (LOI):

> **LOI No. 1:** *Do any issues exist with the landfill design, operations, and management that could impact its ability to meet performance objectives? Are there potential issues in the landfill program that could lead to problems similar to those identified at Hanford's ERDF? If yes, have preventive and mitigative measures been taken to remedy the situation?*
>
> **LOI No. 2:** *Are there cost-effective lessons learned from the reviews at Hanford's ERDF and other DOE on-site disposal facilities that may be recommended to improve reliability and effectiveness of the EMWMF operations and management?*
>
> **LOI No. 3:** *Are there good practices at the EMWMF that may benefit other EM sites?*

These LOI were addressed by conducting a site visit on 11 December 2007 and reviewing design and operation documents provided by contractor and DOE personnel from Oak Ridge. Findings of the ITR team for each of the LOI are described in the following sections.

3. LINE OF INQUIRY NO. 1

> *Do any issues exist with the landfill design, operations, and management that could impact its ability to meet performance objectives? Are there potential*

issues in the landfill program that could lead to problems similar to those identified at Hanford's ERDF? If yes, have preventive and mitigative measures been taken to remedy the situation?

The ITR team found no issues of immediate concern affecting the performance of the EMWMF. The landfill and its supporting operations are conducted using industry-standard practices and many of the latest technologies. Operating procedures and supporting documentation are regularly reviewed and have been updated recently (2007).

The ITR team was concerned that the approved capacity of the EMWMF may not be sufficient for the remaining remedial actions at Oak Ridge, particularly those actions that are outside the current EM baseline. Additionally, there are two issues (compaction assessment, waste settlement and impact on the cover) that should undergo greater review to ensure that the EMWMF will meet the performance objectives over the long term. The capacity issue is discussed in this section as it is a primary concern. The other two issues are discussed in the next section, under LOI No. 2, as they have issues in common with Hanford's ERDF.

The capacity issue was raised in discussions between the ITR team and personnel from DOE-OR and Bechtel Jacobs Company LLC (BJC). This discussion indicated that the design capacity of the EMWMF was estimated assuming that contaminated soils would be available for blending with demolition debris during landfilling. However, the design effort was not able to adequately forecast the physical and economic complexities associated with the logistics of remedial actions, and how these logistics influence the availability of contaminated soil at the time when debris need to be landfilled. Consequently, despite best efforts, debris have been mixed with clean soil more often than originally anticipated to ensure that burial requirements (minimum 1:1 soil-debris ratio) are met.

The impact of using clean soils for burial on the available capacity of the landfill will not be known until closure is approached. The volume of burial soil required in the original filling plan was larger than the total volume of contaminated soil likely to be disposed at the EMWMF. Thus, clean soil would have been required for some of the burial activities. Nevertheless, this example illustrates that logistics issues in DOE remediation projects may impact the required capacity of DOE's on-site disposal facilities, and that greater attention to logistics should be considered in the future.

If practical, the volume of clean soil that is used for disposal operations should be minimized and the use of landfill capacity for contaminated materials should be maximized. To this end, BJC has made operational adjustments to optimize the availability of suitable fill material for the EMWMF (e.g., using ramp material as a fill stockpile, staging waste soil in inactive fill areas) and has developed a sophisticated forecasting tool (Capacity Assurance Remedial Action Report

or CARAR). Other strategies could conceivably be employed; however, continued deviations from waste generation forecasts could have impacts on landfill capacity. The ITR team believes that the remaining landfill volume needed to complete the remedial activities at Oak Ridge should be computed conservatively, and expansion plans for the landfill that are under consideration should be developed in a timely manner. An expansion beyond the approved capacity will require that the Record of Decision be revisited as well as significant interaction with the public, both of which could affect the timing of a future expansion (and if an expansion is permissible). Additionally, the public is aware that landfill capacity may become a problem at EMWMF (see article in the *Knoxville News-Sentinel*, 15 October 2007). Thus, addressing this issue in a timely manner is prudent.

Possible expansion scenarios might include relocation of the existing diversion channel for North Tributary-4 with an associated expansion into the existing hillside north of the disposal cells, or expansion to the west and south to create a dog-leg below Cell 5 (Fig. 1). Capacity of the existing landfill footprint might also be increased by pre-loading the waste (to induce compression), by replacing some of the thicker elements in the cover with thinner geosynthetic elements (e.g., replacing the granular drainage layer with a geocomposite drainage layer, replacing a portion of the compacted clay barrier with a geosynthetic clay liner, using a geotextile in lieu of the granular filter layer), or by reducing the thickness of the surface layer. Feasibility of any of these options would require careful engineering analysis in the context of the 1000-yr design life required for the EMWMF as well as regulatory concurrence.

This experience at EMWMF also suggests that landfill volume requirements for future EM on-site disposal facilities should be estimated using information from past and operating disposal facilities as a guide and account for the maturity of the remedial characterization program and decisions made regarding waste disposition. Waste volumes should be estimated conservatively based on past experience [e.g., by computing growth factors (actual ÷ estimated waste volumes) from previous environmental restoration projects] and realistic assumptions regarding sequencing of waste streams during remedial activities. Accelerated phasing of landfill construction may also be considered so that lined areas are available where debris and soils can be stockpiled prior to landfilling, thereby reducing the amount of clean soil used during disposal. This approach would have to consider the additional leachate to be treated from the staging areas, and how the leachate volume would affect treatment capacities and costs. The experience of on-site personnel from DOE and BJC should be particularly helpful in this regard.

4. LINE OF INQUIRY NO. 2

> *Are there cost-effective lessons learned from the reviews at Hanford's ERDF and other DOE on-site disposal facilities that may be recommended to*

improve reliability and effectiveness of the landfill operations and management?

4.1 Compaction Testing of Soil and Debris Mixtures

The primary waste streams at EMWMF consist of contaminated soils and demolition debris, which is similar to the operation at Hanford's ERDF. However, EMWMF uses a lower soil-debris ratio (minimum 1:1) than is currently approved at Hanford's ERDF (minimum 3:1). This criterion on soil-debris ratio was based on a test pad constructed at EMWMF in 2005. Compaction of the soils and soil-debris mixtures is completed using at least four passes of a Caterpillar D-8 bulldozer or a Caterpillar 826 landfill compactor based on the outcome of the 2005 test pad study. Density of soil or soil-like material is checked at regular intervals by testing with a nuclear densometer (minimum frequency of one test per 765 m^3 of material placed). The density is required to be at least 85% of the maximum dry density defined by standard Proctor compaction effort.

As reported for Hanford's ERDF and Idaho's ICDF (Benson et al. 2007a, b), the ITR team is concerned with the use of a nuclear densometer to verify compaction. Large particles in the material being tested can have a strong influence on the density measured with a nuclear densometer. Consequently, densities measured in the EMWMF may not reflect the actual density. EMWMF personnel are aware of this issue and have taken proactive measures such as the test pad constructed in 2005. They are also cognizant that nuclear gage readings can be misleading and have relied on experience from field technicians to ensure adequate compaction. For example, BJC compaction test report for test number 555 at location G21 (21 November 2007) states that "pieces of block, brick, wood, and concrete on surface at testing location. Soil material appeared to be near optimum. Material did not exhibit pumping or deflection under the equipment and was judged to have met the 85% compaction based on the observations." Although these notes indicate that the technician believes the waste was adequately compacted, these notes also suggest that the data obtained from the nuclear density test was of questionable validity, and confirm that a quantitative compaction assessment could not be made.

As was recommend for Hanford's ERDF and Idaho's ICDF (Benson et al. 2007a, b), the ITR team recommends that nuclear density testing of non-soil materials be discontinued and that other methods to evaluate density be explored. Intelligent compaction equipment is one option (this possibility is being explored by BJC). An alternative approach is to rely more heavily on a performance-based method derived from the previous test pad study. A similar approach is being done at Hanford's ERDF. Either approach will ultimately increase quality, reduce costs, and reduce worker exposure. Regardless of the approach used, the compaction criterion that is applied should be tied quantitatively to settlement and allowable deformations in the final cover to the extent practical (see next section).

4.2 Final Cover Settlement

The final cover proposed for the EMWMF is a state-of-the-art multi-layer system (Fig. 5) that relies primarily on a composite resistive barrier layer (geomembrane over a clay layer) to achieve the target percolation criterion (10 mm/yr). Although flexible materials have been proposed for the barrier material (e.g., LLDPE geomembrane), the composite barrier can be affected by differential settlement. This is particularly important in a humid climate such as Oak Ridge, where resistive barrier layers play a critical role in controlling percolation into the waste. Consequently, the impacts of differential settlement should be further evaluated and the methods of waste placement should be reviewed to ensure that adequate support for the final cover will exist over the long term.

DOE and BJC have implemented procedures intended to minimize the impacts of differential settlement. For example, containers cannot be placed within 3 m (10 ft) of final grade and are placed as close as practical to the bottom of each cell to minimize their impact on the final cover. A rigorous performance-based methodology is also used for compaction. Settlement analyses were also conducted to assess the impact of container collapse. These efforts will reduce the potential for differential settlement and impacts to the cover. Nevertheless, the ITR team recommends that DOE evaluate several other factors that could affect settlement of the cover.

First, the waste includes soil-debris mixtures as well as grouted materials. Consequently, the stiffness of the waste will vary spatially throughout the landfill, which will contribute to differential settlement (Benson et al. 2007b). Second, the density requirement (85% relative compaction based on standard Proctor) is relatively low for an earthwork operation. Thus, the waste will be more compressible than a typical structural fill, which could result in greater settlement. Experience has also shown that a relatively low compaction requirement generally results in greater spatially variability in compaction of the fill, which will exacerbate differential settlement. Third, much of the soil mixed with the debris is fine-grained and moist or wet. Consequently, greater compression of the soil fraction will occur at the EMWMF relative to other sites where the soil fraction is coarse-grained (e.g., as at ERDF or ICDF). Compression of the soil matrix will also be time dependent due to the dissipation of excess pore pressures in the fine-grained soil over the relatively long drainage distance imposed by the cell geometry (≈11 m assuming double drainage). Secondary compression of the fine-grained soil fraction may also be appreciable and spatially variable.

While recognizing the significant effort made to date to ensure appropriate waste placement and compaction, the ITR team recommends that the compaction criterion, void space criterion for grouting, and settlement of the waste in the EMWMF continue to be re-evaluated. This re-evaluation should consider the impacts of differential settlement caused by variations in stiffness,

time-dependent primary compression of the fine-grained soil matrix, and long-term creep settlement of the soil matrix and the debris. To the extent practical, a quantitative linkage should also be developed between the predicted settlement of the cover and the criteria for waste compaction and maximum void space. An increase in the required minimum density of the waste should also be considered along with a test fill or preloading test to quantify the settlement of the waste under expected loads applied by the final cover. A preloading test could also be used to quantify gains in landfill volume accrued by compressing the waste mass. Consideration should also be given to the timing of completion of waste placement prior to construction of the final cover. The period between completion of waste placement and cover construction could be used to assess overall and differential settlement.

The ITR team recognizes that a re-evaluation of the settlement analysis is not a trivial task and may require significant time and effort to complete. Thus, beginning this re-evaluation in the near term is important. Data collected from settlement monuments that have been installed on Cell 1 could be useful in this evaluation. Changes in placement methods made based on this evaluation (if needed) would be less costly than remedial measures to stabilize the waste at closure. Additionally, capacity accrued through pre-compression might reduce the size of an expansion beyond the approved geometry of the site provided that waste volumes do not increase significantly beyond current projections.

5. LINE OF INQUIRY NO. 3

Are there good practices at the EMWMF that may benefit other EM sites?

Several practices at the EMWMF should be considered for use at other EM sites operating landfills:

- Predictive techniques such as the CARAR tool developed by BJC should be considered by other sites for forecasting volume requirements. Regardless of the method used, forecasting techniques must be calibrated based on past experience wherever they are deployed.

- Electronic systems are being used to ensure rigorous control of waste entering the EMWMF. Moreover, these systems are being upgraded to provide greater control and electronic record keeping. Other EM operations should review the methods being employed at the EMWMF, and determine if they can be used at their disposal facilities.

- EMWMF personnel have developed a technical guidance document that is sent to all waste generators to communicate waste delivery/disposal requirements, capture lessons learned,

and provide practical guidance on a broad range of topics. Similar guides should be considered for other operating and future EM disposal sites.

- A dedicated haul road was constructed at Oak Ridge to transport wastes from the ETTP to the EMWMF, precluding the need to truck ETTP wastes over public roadways. Consequently, fewer restrictions on trucking are required and public concerns about wastes being transported on public roads are avoided. Similar haul roads should be considered at other EM sites when practical and economical.

- EMWMF employs a gravity-driven leachate collection system. This type of system eliminates concerns about the reliability of leachate pumps and level monitoring systems (i.e., problems encountered at Hanford's ERDF). Similar systems could be deployed at new on-site disposal facilities provided the long-term integrity of the liner penetrations required for a gravity system can be demonstrated.

- DOE has established a trust fund for perpetual long-term maintenance and monitoring of the EMWMF after closure. This action builds public trust and reduces the government's long-term financial liability. A similar approach should be considered at other EM sites where on-site disposal facilities are being operated or considered.

- A stakeholder group with participants from TDEC, EPA, DOE, and BJC meets quarterly for open discussions on key issues related to EMWMF. This group enhances relationships and communications amongst the stakeholders. Similar groups should be formed at other EM sites with disposal facilities.

6. SUMMARY OF RECOMMENDATIONS

The following recommendations are made by the ITR team for the EMWMF and other EM sites:

- Conservatively estimate the remaining landfill volume that will be needed to complete the remedial activities at Oak Ridge, and develop expansion plans for the landfill if necessary. Planning for this activity is being conducted and should continue in a timely manner. Several possible expansion scenarios should be explored. Capacity of the existing landfill footprint might also be increased by pre-loading the waste, by replacing some of the thicker elements in the cover with thinner geosynthetic elements, or by reducing the thickness of the surface layer.

- Volume requirements for future EM on-site disposal facilities should be estimated using information from past and operating disposal facilities as a guide. Waste volumes should be

estimated conservatively based on past experience. The CARAR support tool developed by BJC is a model that other sites may find useful.

- Accelerated phasing of landfill construction should be considered where lined areas are available for stockpiling debris and soils prior to landfilling, thereby reducing the amount of clean soil used during disposal.

- Nuclear density testing should be discontinued for non-soil materials. Other methods to evaluate the density should be explored and implemented (e.g., as is being done at Hanford's ERDF). Intelligent compaction methods are currently being explored by site personnel.

- The compaction criterion, void space criterion for grouting, and settlement of the waste in the EMWMF should be re-evaluated to assess the potential for differential settlement caused by variations in stiffness, time-dependent primary compression of the fine-grained soil matrix, and long-term creep settlement of the soil matrix and the debris. To the extent practical, a quantitative linkage should be developed between the predicted settlement and the criteria for waste compaction.

- An increase in the required minimum density of the waste should be considered along with a test fill or preloading test to quantify the settlement of the waste under expected loads applied by the final cover.

- Settlement issues are important to all of EM's on-site disposal facilities. A complex-wide technology effort should be developed where lessons learned from existing facilities are analyzed, compiled, and presented for dissemination (e.g., via a web site). Additionally, an applied research program should be implemented to provide a stronger technological basis for predicting near-term and long-term compression and settlement of EM demolition wastes, as well as the impact of settlement on cover performance.

- Automated electronic systems are being used to ensure rigorous control of waste entering the EMWMF and for electronic record keeping. A technical guidance document has also been developed to communicate waste delivery/disposal requirements, capture lessons learned, and provide practical guidance on a broad range of topics not specifically addressed in other documents. Similar systems and guides should be considered for other operating and future EM disposal sites.

- A dedicated haul road was constructed at Oak Ridge to transport wastes from the ETTP to the EMWMF, precluding the need to truck ETTP wastes over public roadways. Consequently, fewer restrictions on trucking are required and public concerns about wastes

being transported on public roads are avoided. Similar haul roads should be considered at other EM sites when practical and economical.

- DOE has established a trust fund for perpetual long-term maintenance and monitoring of the EMWMF after closure. A similar approach should be considered at other EM sites where on-site disposal facilities are being operated or considered.

- A stakeholder group with participants from TDEC, EPA, DOE, and BJC meets quarterly for open discussions on key issues related to EMWMF. This group enhances relationships and communications amongst the stakeholders. Similar groups should be formed at other EM sites with disposal facilities.

- Predictive techniques such as the CARAR tool developed by BJC should be considered by other sites for forecasting volume requirements. Regardless of the method used, forecasting techniques must be calibrated based on past experience wherever they are deployed.

- Very conservative assumptions have been made for the EMWMF and other DOE on-site disposal facilities regarding the ability of lining systems to limit discharges to ground water. These assumptions should be revisited to determine if more realistic assumptions can be made that account directly for the attenuation capacity inherent in modern liner materials.

7. ACKNOWLEDGEMENT

This technical review was supported by Mark Gilbertson (DOE-HQ), Dinesh Gupta (DOE-HQ), and John Michael Japp (DOE-OR). Vincent Adams (DOE-HQ) and Owen Robertson (DOE-RL) participated in the site visit and the review. Discussions held with representatives of Bechtel Jacobs Company LLC (BJC) regarding design and operation of the EMWMF were particularly helpful. The ITR thanks those individuals with DOE and BJC who provided information and input during the review.

8. REFERENCES

Benson, C., Albright, W., and Ray, D. (2007a). Evaluating Operational Issues at the Environmental Restoration Disposal Facility at Hanford, Independent Technical Review Report: Hanford Operations. Office of Engineering and Technology (EM-20), US Department of Energy, Washington, DC, 17 June 2007.

Benson, C., Albright, W., Ray, D., and Smegal, J. (2007b). Review of the Idaho CERCLA Disposal Facility (ICDF) at Idaho National Laboratory, Independent Technical Review Report: Idaho Operations. Office of Engineering and Technology (EM-20), US Department of Energy, Washington, DC, 5 December 2007.

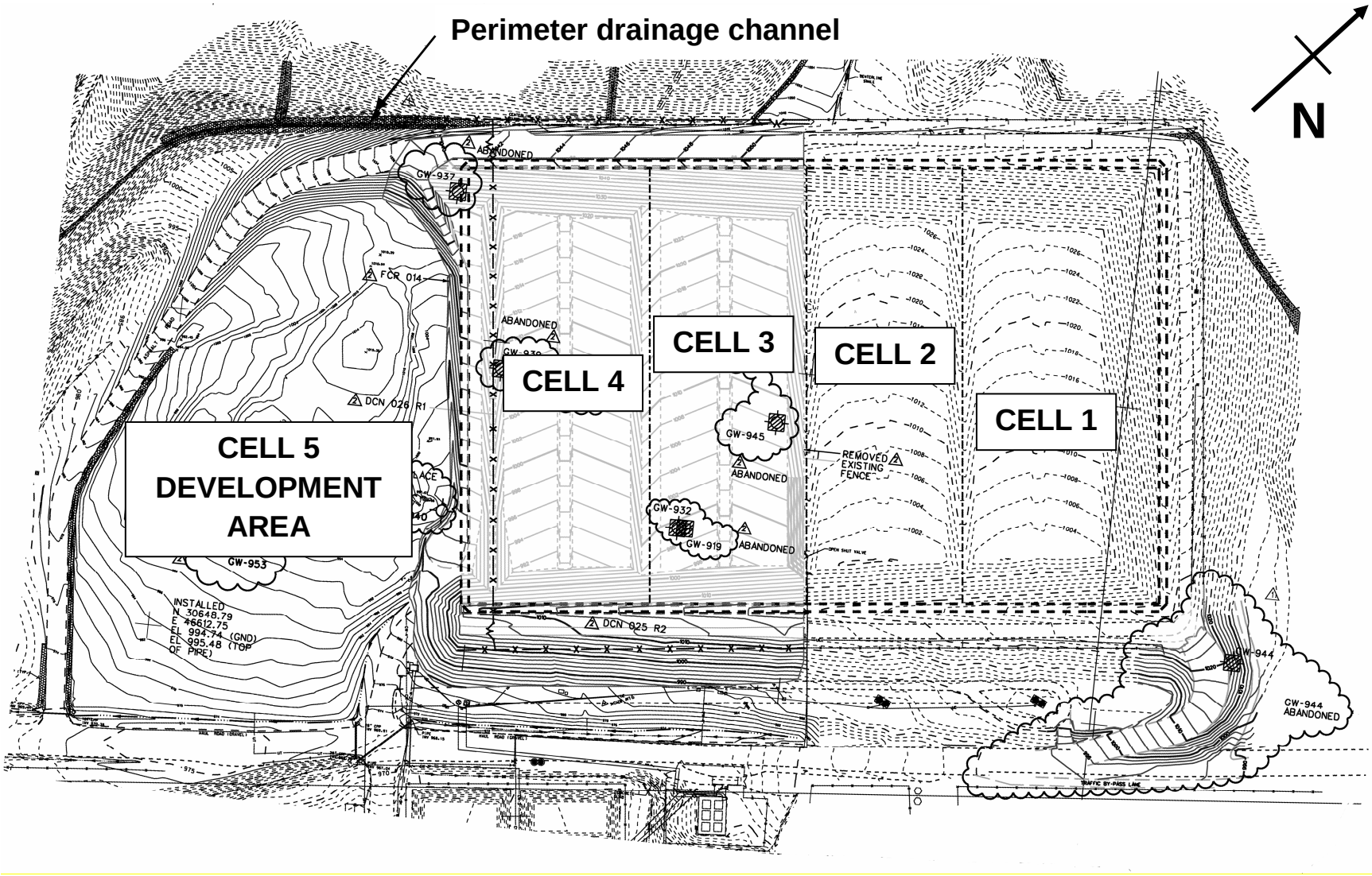

Fig. 1. Plan view of EMWMF showing existing Cells 1-4 and area planned for Cell 5.

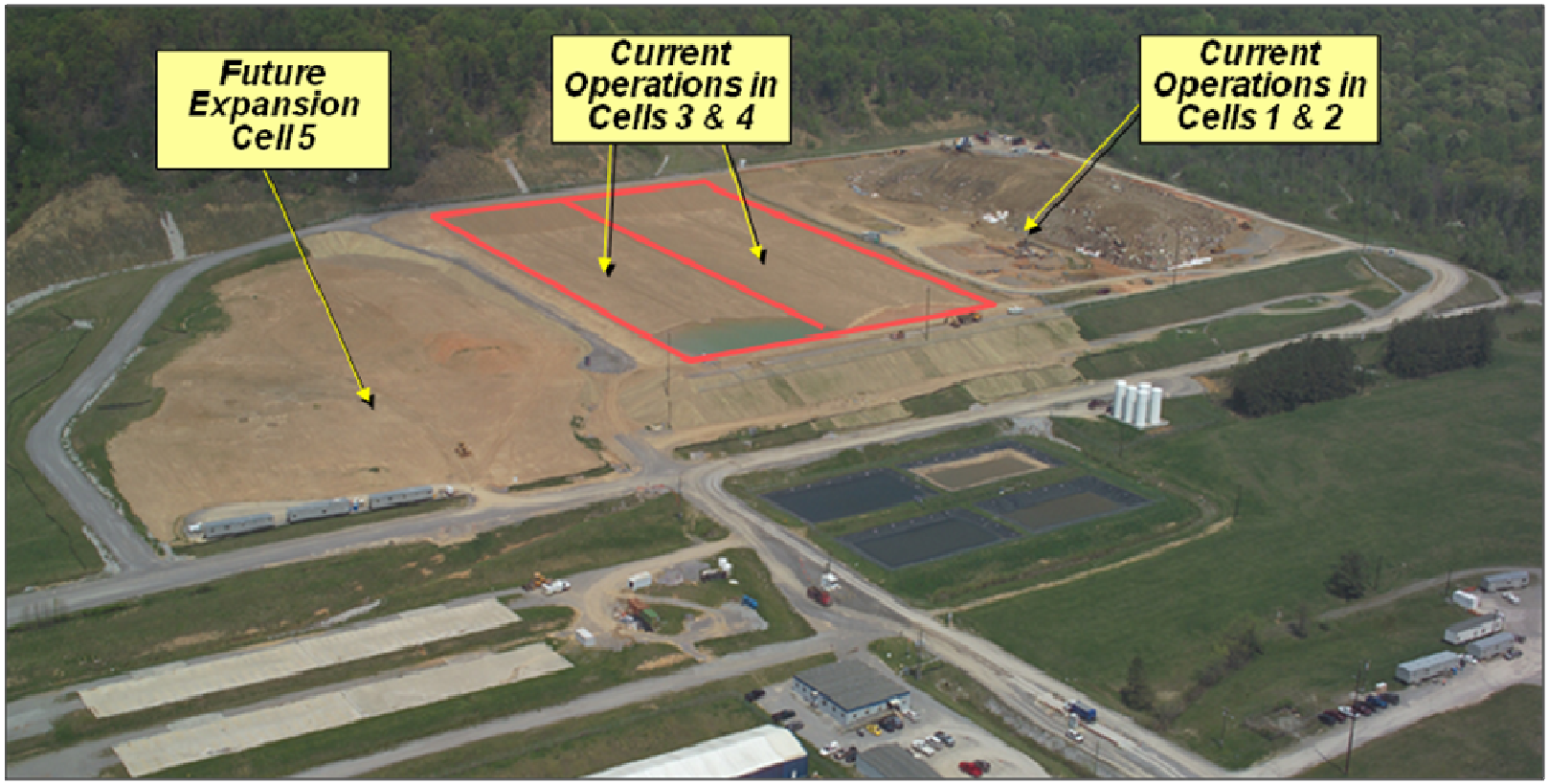

Fig. 2. Photograph of EMWMF showing existing Cells 1-4, area planned for Cell 5, and areas of current operations. Photograph courtesy of J. M. Japp (DOE-OR).

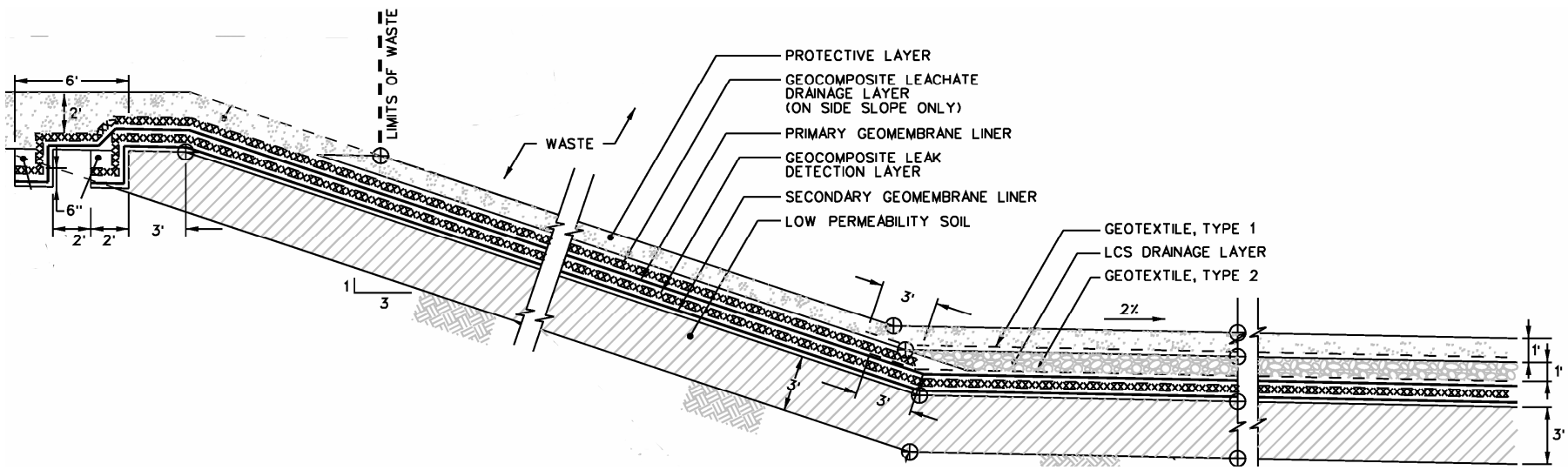

Fig. 3. Schematic of double liner system used for the EMWMF along the side slope and base.

Fig. 4. Leachate storage area (a) and leaching loading station (b). Photographs courtesy of J. M. Japp (DOE-OR).

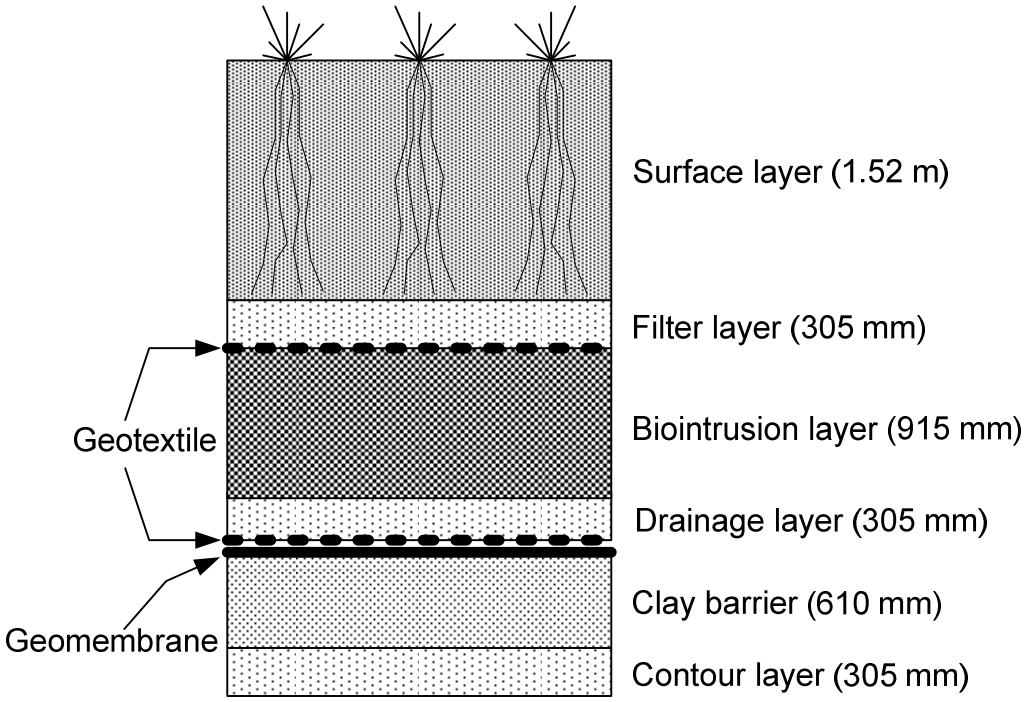

Fig. 5. Schematic of cover profile planned for the EMWMF. Upper 305 mm of clay barrier near base of cover profile is amended with bentonite to reduce the hydraulic conductivity.