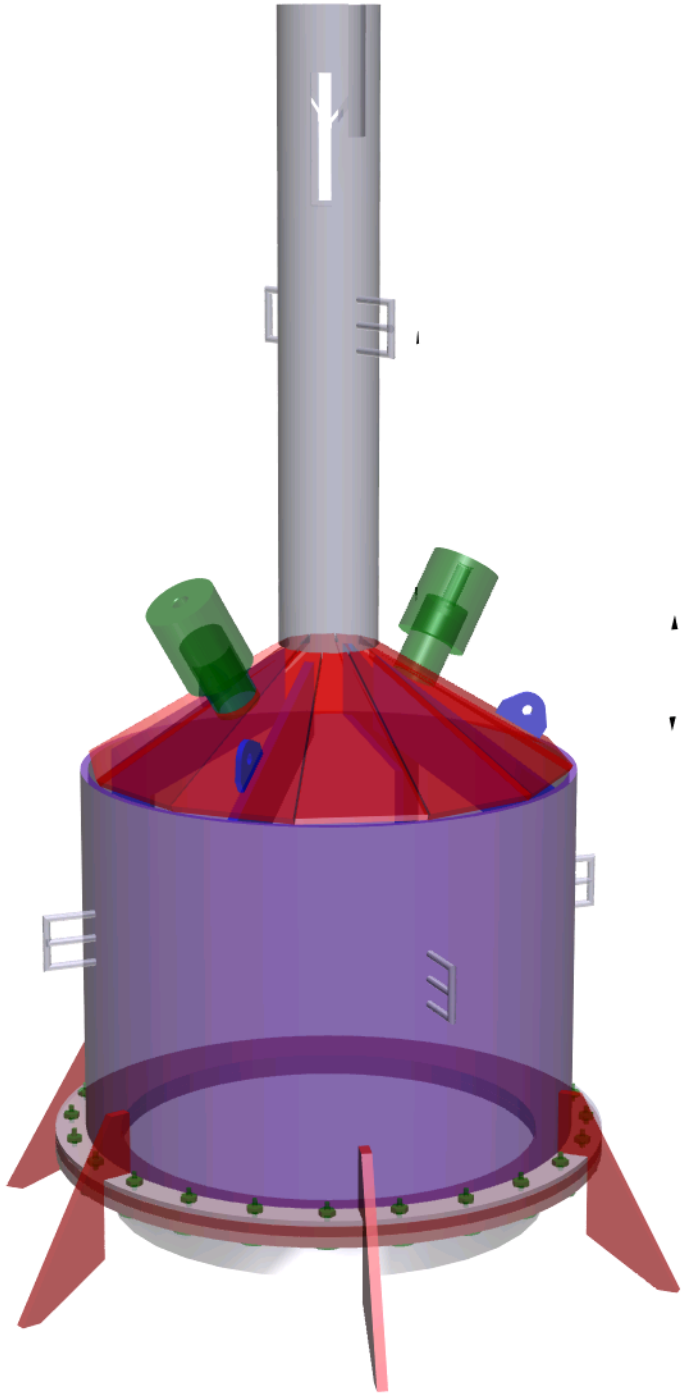

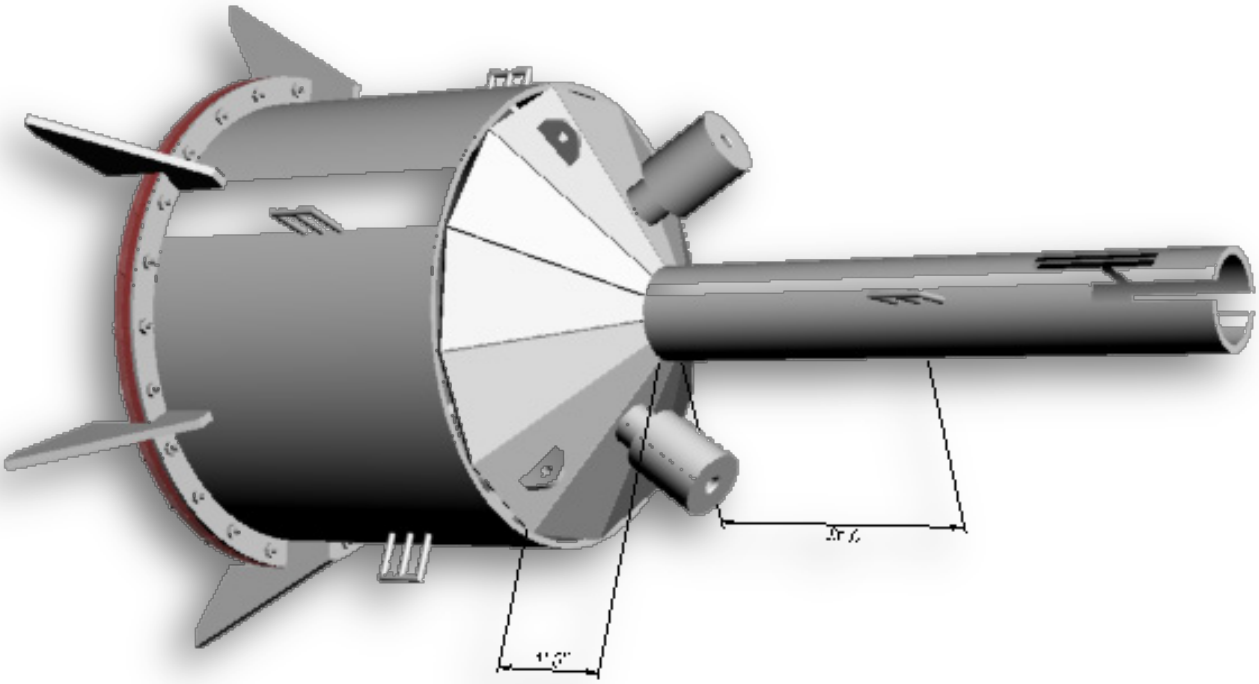

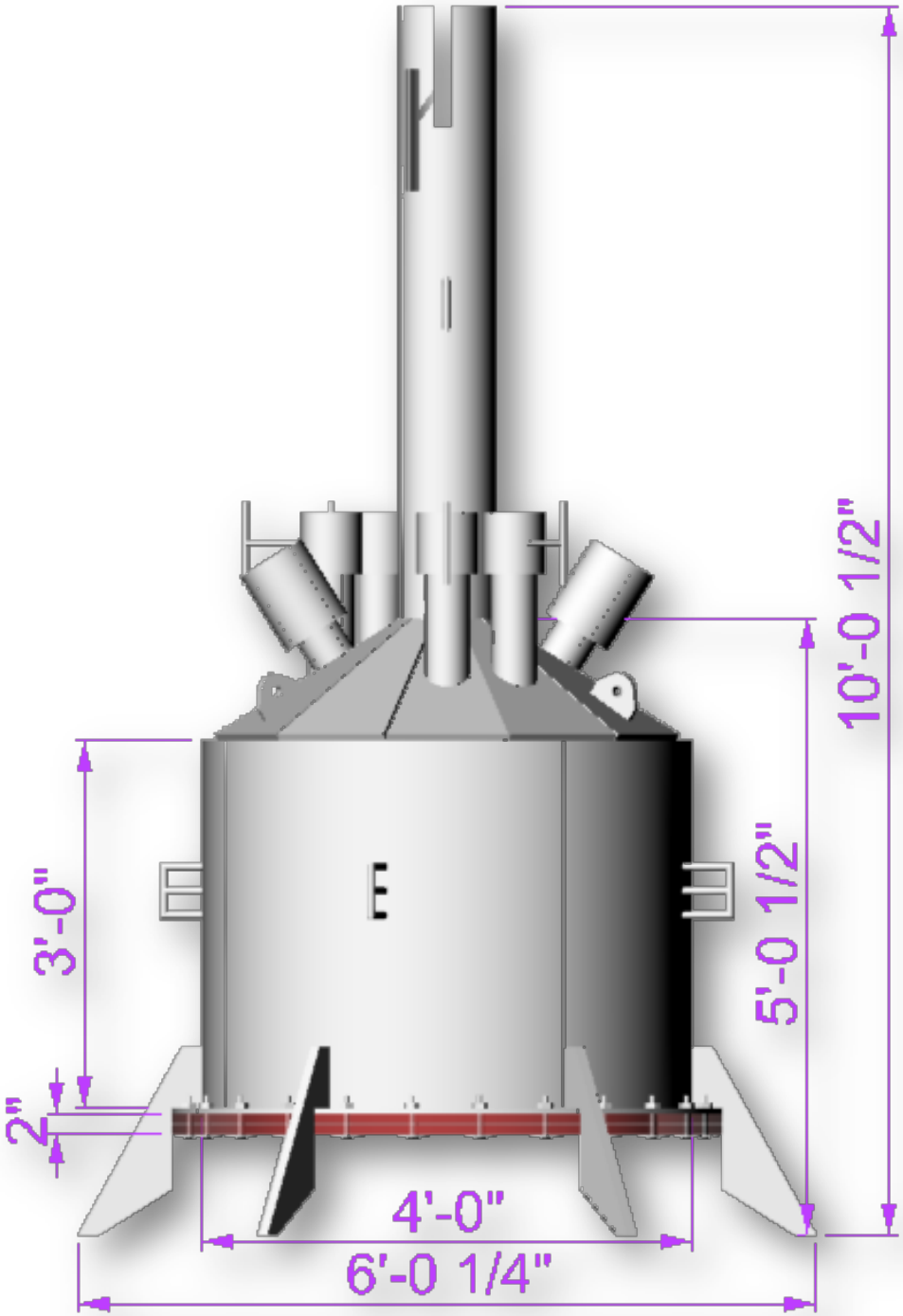
10'-0 1/2"
5'-0 1/2"
3'-0"
2"
4'-0"
6'-0 1/4"

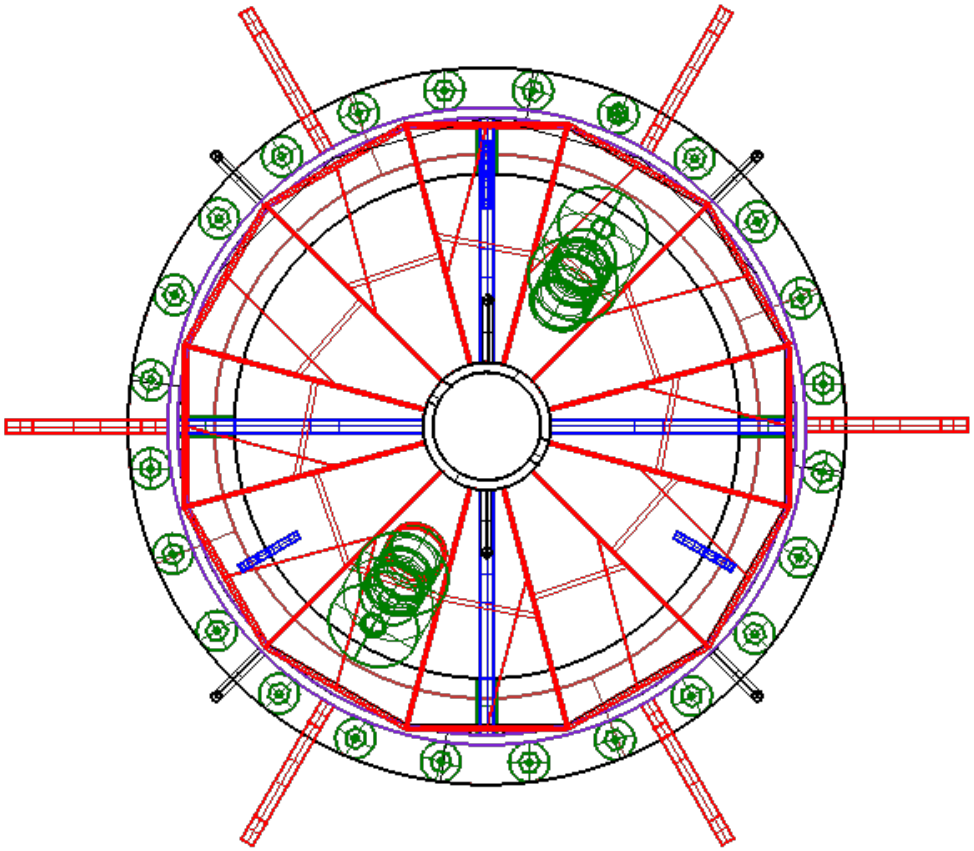

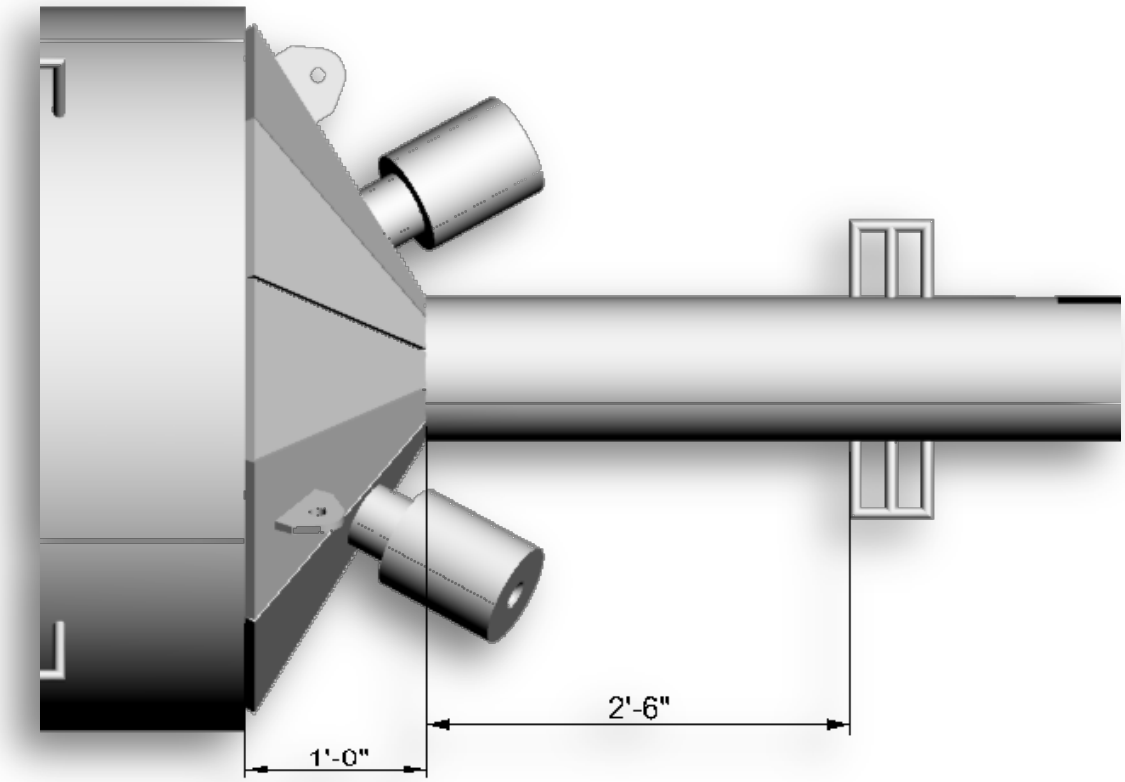
2'-6"
1'-0"

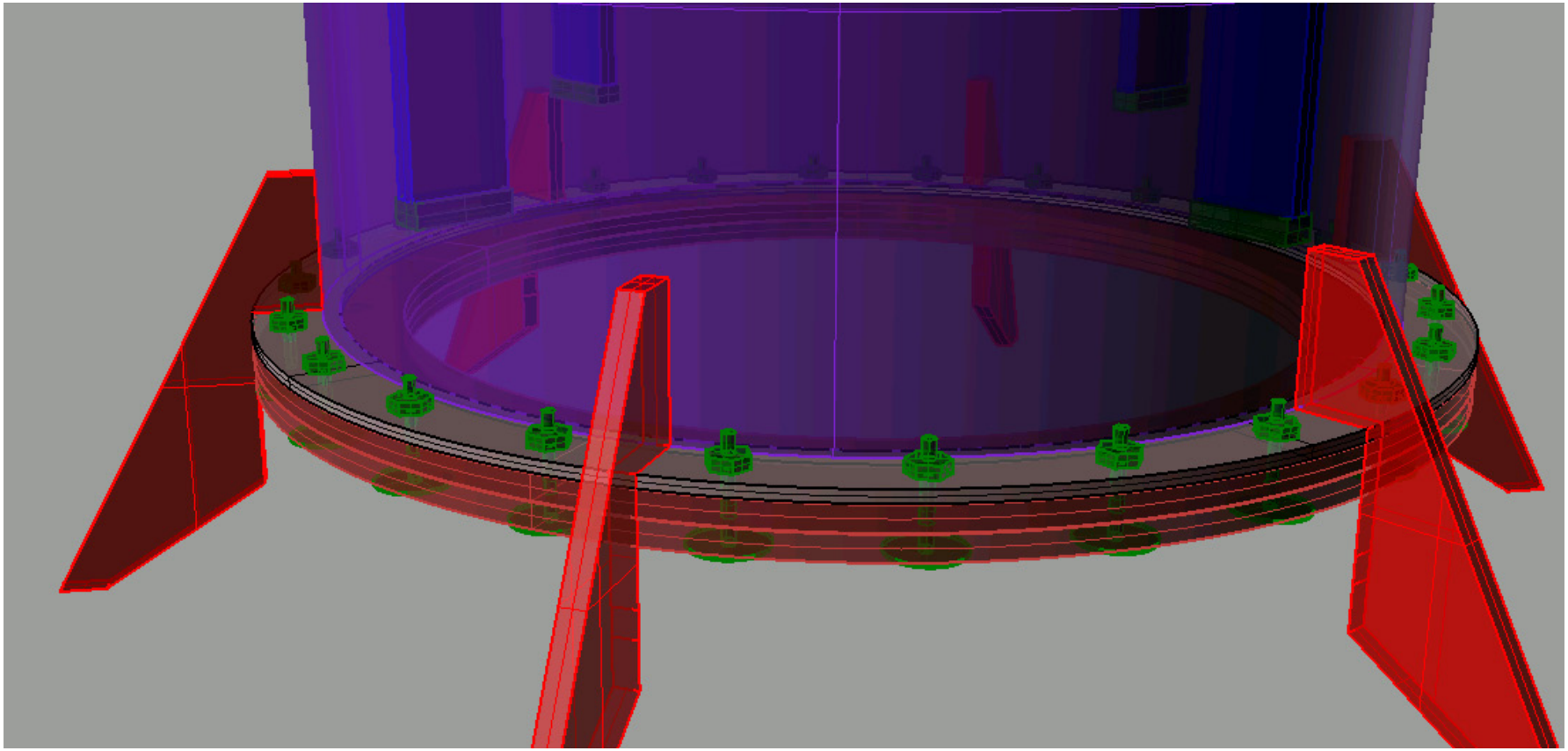

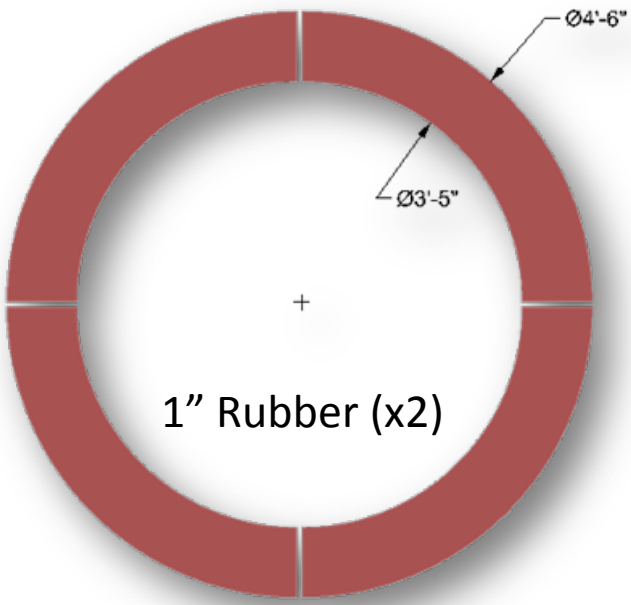
Ø4'-6"
Ø3'-5"
1” Rubber (x2)

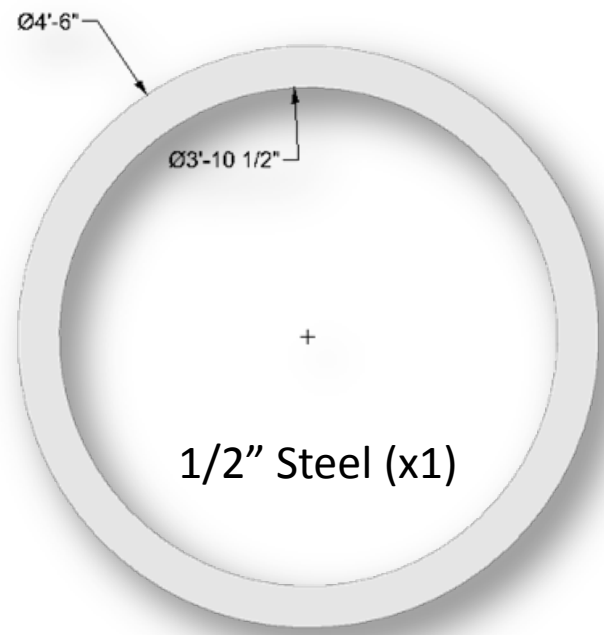
Ø4'-6"
Ø3'-10 1/2"
1/2” Steel (x1)

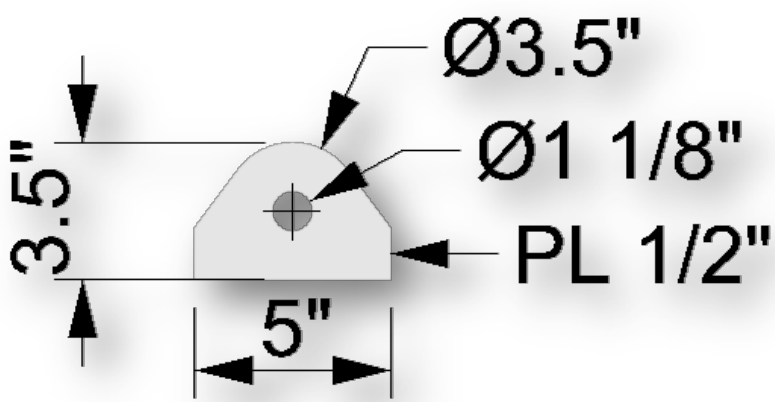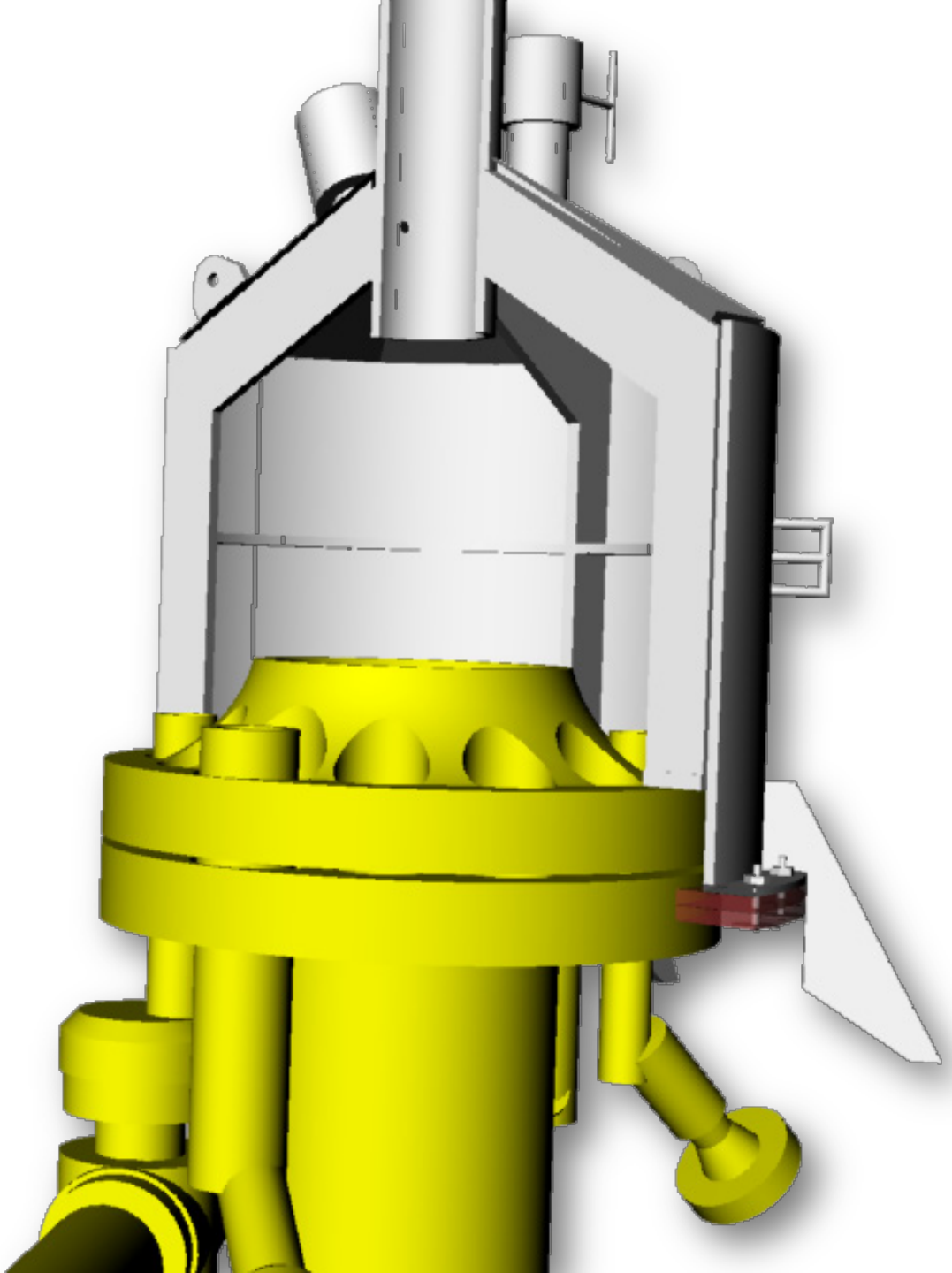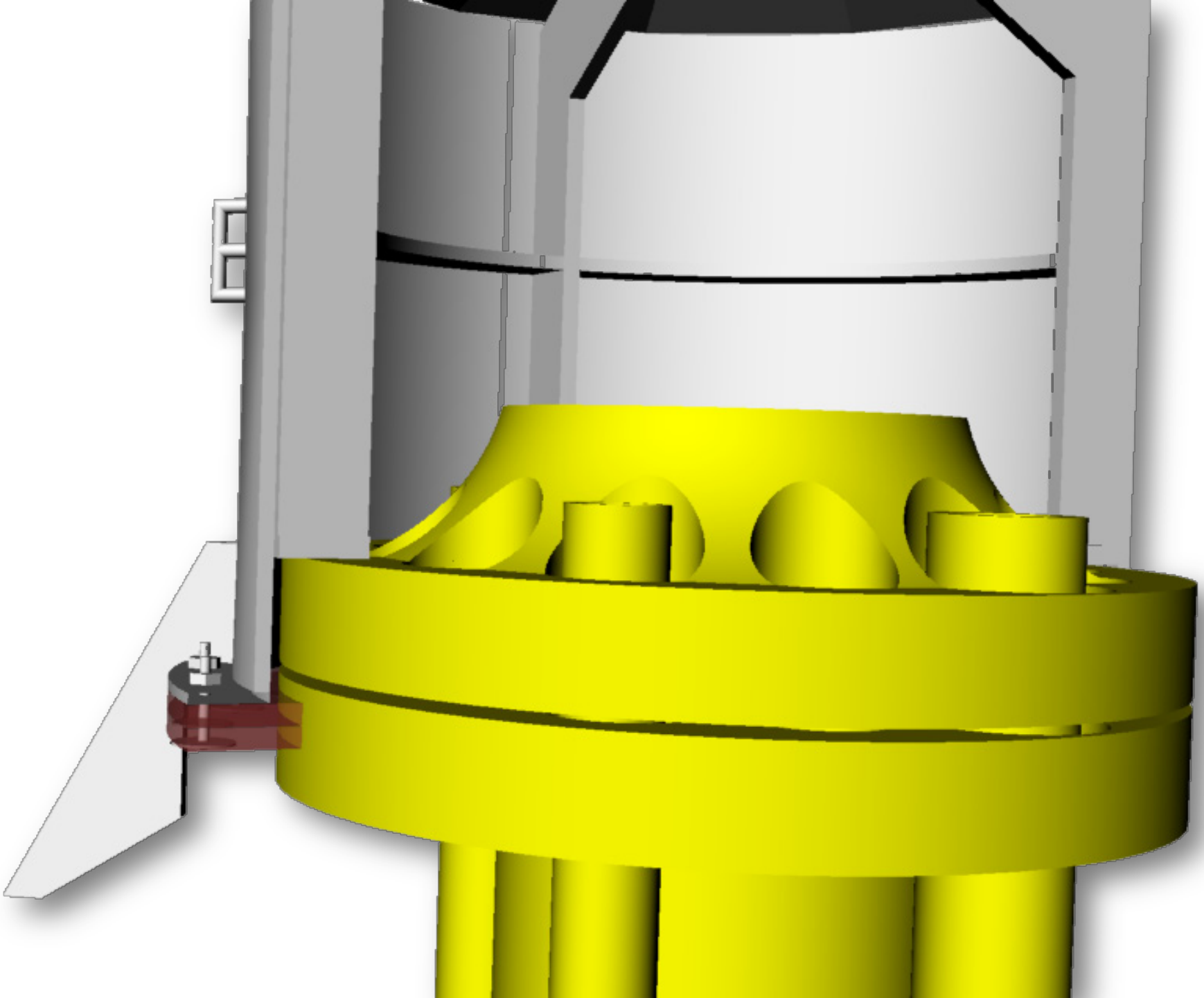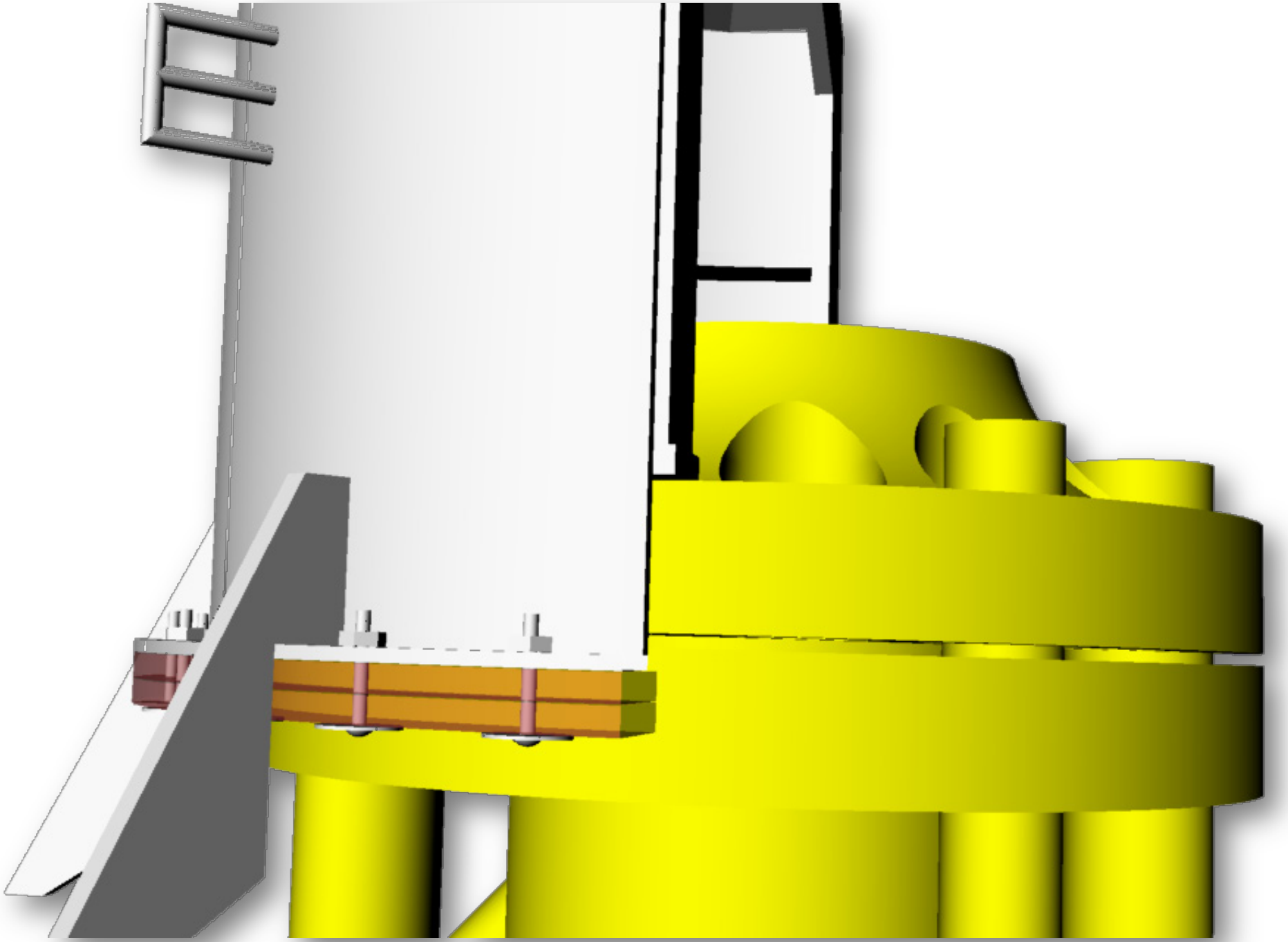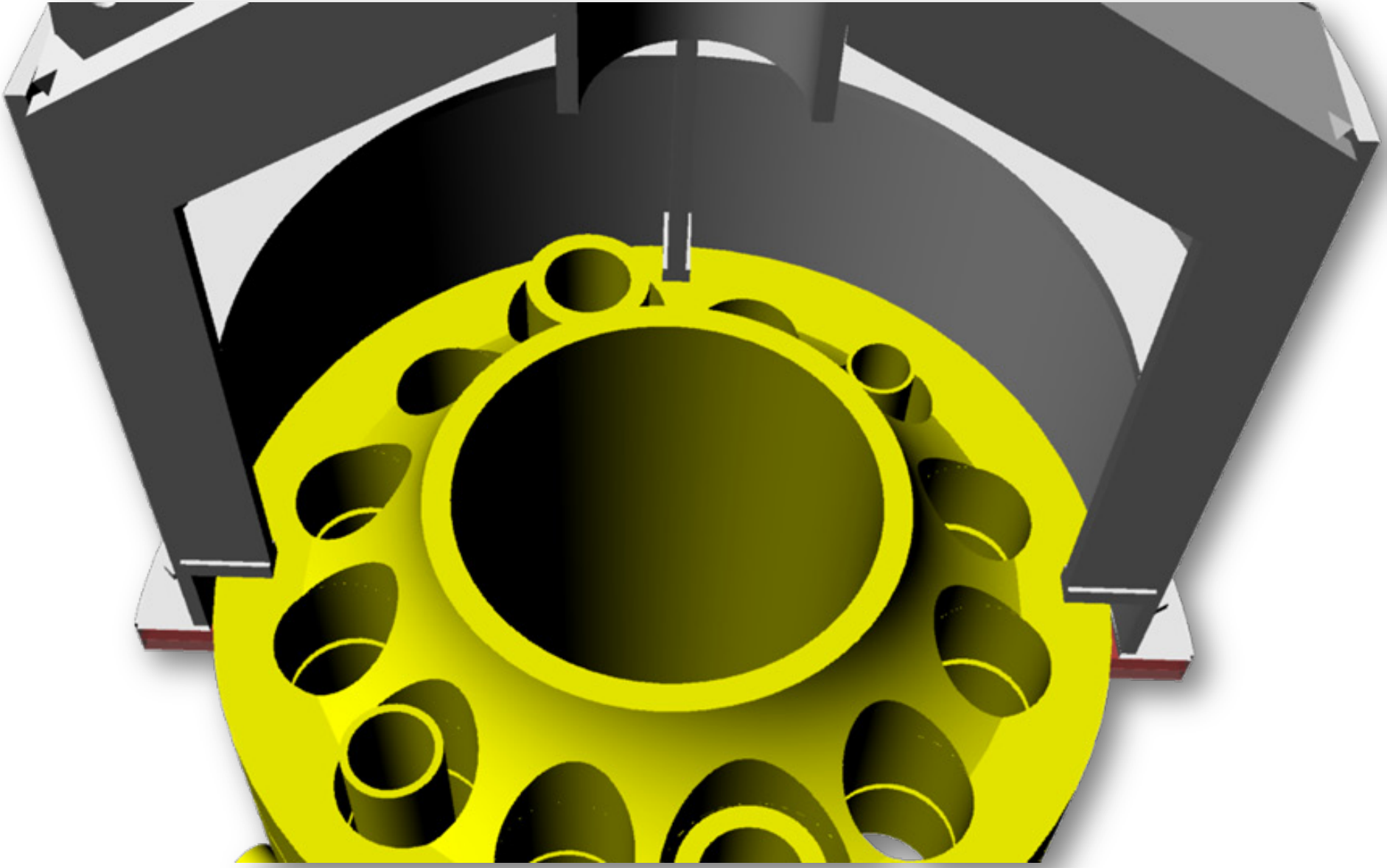
Ø3.5"
Ø1 1/8"
PL 1/2"
3.5"
5"