7.3.1.1.1 Population density and distribution

The qualifying condition for population density and distribution is as follows:

> The site shall be located such that, during repository operation and closure, (1) the expected average radiation dose to members of the public within any highly populated area will not be likely to exceed a small fraction of the limits allowable under the requirements specified in §960.5-1(a)(1), and (2) the expected radiation dose to any member of the public in an unrestricted area will not be likely to exceed the limit allowable under the requirements specified in §960.5-1(a)(1).

Major considerations

On the basis of the qualifying, favorable, potentially adverse and disqualifying conditions for this guideline (Table 7-9), two major considerations are identified that influence the favorability of the sites with respect to population density and distribution. These major considerations are (1) remoteness of the site from highly populated areas and (2) the population density at the site, near the site, and in the general region of the site. These major considerations are of equal importance and are in turn influenced by several more-specific contributing factors, which are discussed below.

Evaluation of the sites in terms of the major considerations

Remoteness. The remoteness of a site is measured by its distance from highly populated areas of 2,500 people or more, or from an area with 1,000 or more persons within 1 square mile. This major consideration is derived from the second favorable condition and the second potentially adverse condition (see Table 7-9). It relates to the qualifying condition in that the potential for radiation exposure increases with proximity to population concentrations. The second favorable condition refers to the remoteness of the site from highly populated areas, and the second potentially adverse condition addresses the proximity of the site to populated areas and areas with at least 1,000 individuals in an area that is 1 mile by 1 mile. The two contributing factors related to this major consideration are (1) the air distance of the site from population concentrations and (2) the size of those concentrations. Specifically, the closer a site is to highly populated areas, and the larger such population concentrations are, the less favorable is the site. A summary of the evaluation for each site follows.

The immediate vicinity of the Davis Canyon site contains no highly populated areas. Moab, with a population of 5,333, is the closest and is approximately 33 miles from the boundary of the controlled area. Moab is also the nearest 1-square mile area with a population of at least 1,000 persons.

The Deaf Smith County site is approximately 17 miles north of Hereford, with a population of 15,853. Hereford is also the nearest area with at least 1,000 persons in a 1-square-mile area.

8 0 0 0 8 1 0 0 5

Table 7-9. Guideline-condition findings by major consideration-population density and distribution[a,b]

Condition	Davis Canyon	Deaf Smith	Hanford	Richton Dome	Yucca Mountain
MAJOR CONSIDERATION 1: REMOTENESS FROM HIGHLY POPULATED AREA					
Favorable condition 2					
Remoteness of the site from highly populated areas.	P	P	P	P	P
Potentially adverse condition 2					
Proximity of the site to highly populated areas, or to areas having at least 1,000 individuals in an area 1 mile by 1 mile as defined by the most recent decennial count of the U.S. census.	NP	NP	NP	P	NP
MAJOR CONSIDERATION 2: POPULATION DENSITY					
Favorable condition 1					
A low population density in the general region of the site.	P	P	P	P	P
Potentially adverse condition 1					
High residential, seasonal, or daytime population density within the projected site boundaries.	NP	NP	NP	NP	NP

[a] Key: NA = not applicable; NP = for the purpose of this comparative evaluation, the favorable or potentially adverse condition is <u>not</u> present at the site; P = for the purpose of this comparative evaluation, the favorable or potentially adverse condition is present at the site.

[b] Analyses supporting the entries in this table are presented in Chapter 6 of the environmental assessment for each site.

At the Hanford site, Sunnyside is the nearest highly populated area. It has a population of 9,229 and is approximately 15 miles southwest of the site. Sunnyside is also the closest 1-square-mile area with a population of at least 1,000.

At the Richton site, the town of Richton, with a population of 1,205 within a 1 square mile, is adjacent to the proposed boundary of the controlled area. However, the town is 2 miles from the proposed boundary of the surface facilities of the repository. The nearest highly populated area is Petal/Hattiesburg with a population of 49,300; it is 25 kilometers from the boundary of the site.

The Yucca Mountain site is remote from highly populated areas or 1-square-mile areas with a population of at least 1,000. Las Vegas Valley, the nearest highly populated area, is at a distance of approximately 85 miles.

Population density. Population density is evaluated for each site on the basis of density within the projected site boundaries, near the site, and in the general region of the site. For this analysis, "near the site" is defined as being within 10 miles of the site and "in the general region" as being within 50 miles. This major consideration is derived from the first favorable condition and the first potentially adverse condition (see Table 7-9). It relates to the qualifying condition in that a larger number of people are potentially exposed to radioactive releases as the population density in the region of a site increases. The first favorable condition is a low population density in the general region of the site, and the first potentially adverse condition addresses high residential, seasonal, or daytime population density within the projected site boundaries.

In the evaluation of this major consideration, a "low population density" is defined as being less than the average population density of the contiguous United States in 1980, or 76 persons per square mile. This major consideration is also closely related to the third disqualifying condition for this guideline, which is related to emergency planning. Specifically, as population density near the site increases, a more extensive emergency-preparedness plan is required, since protective measures would have to be taken on behalf of a larger number of people in the event of an accident. As the density on the site, near the site, and within the general region of the site increases, the favorability of the site decreases. A summary of the site evaluation for this consideration follows. The site-specific information used in the evaluation is summarized from Section 6.2.1.2 of the environmental assessments for the five nominated sites.

There is no residential or seasonal population within the projected boundaries of the Davis Canyon site. The daytime population is limited to an estimated peak of seven offroad-vehicle users. The onsite population density is therefore far below the national average. About 282 people are estimated to live within 10 miles of the site. The population density in the general region is also far below the national average, at 3.8 persons per square mile.

The Deaf Smith County site is estimated to have 27 residents within its boundaries. The seasonal population density at the site is about seven persons per square mile assuming that the 10,440 migrant workers who were in

8 0 0 0 9 1 0 0 7

Deaf Smith County in 1975 are evenly distributed throughout the county. The combined residential, seasonal, and daytime population density within the site boundary is approximately 10 persons per square mile. The population within 10 miles of the site is estimated to be 1,739. The population density in the general region of the site is 24 persons per square mile.

Although there are no residences or seasonal population at the Hanford site, approximately 700 persons work within the site boundary at any given time, which is equivalent to a population density of 29 persons per square mile. In addition, 4,800 persons are employed in nuclear energy jobs in the vicinity of the site. (However, because these workers receive training in safety and evacuation procedures, they are better prepared than the general public to respond to radiological hazards.) There are approximately 110 people within 10 miles of the site. The population density in the general region of the site is 43 persons per square mile. Federal ownership of the Hanford site reduces the uncertainty associated with future population growth in the area.

The residential population within the proposed controlled area of the Richton site is about 140 people, assuming that there are 50 households with an average size of 2.8 persons. However, there are no residences within the proposed restricted area. Seasonal population fluctuations are expected to be minimal. The daytime population may vary by 100 because a school is located in the southeast portion of the area of the Richton Dome. The population within 10 miles is approximately 4,610. The population density in the general region is 40 persons per square mile.

There are no residences within 6.2 miles of the Yucca Mountain site and no seasonal or daytime populations within the site boundaries. About 5,200 workers are employed at the Nevada Test Site, but most of their activities are conducted on the opposite side of the Nevada Test Site. Because of their experience with nuclear research and testing, workers at the Nevada Test Site are better prepared than members of the general public to deal with radiological hazards. The population density in the general region of the site is approximately 2.5 people per square mile. Federal ownership of the site and the surrounding area reduces the uncertainty of population growth near the site.

Summary of the comparative evaluation

Yucca Mountain is the most favorable site for both major considerations. There are no highly populated areas within 50 miles of the site, and the regional population density is the lowest of all the sites. In addition, there is no residential or seasonal population on or near the site. Davis Canyon is less favorable because it is 33 miles from the highly populated area of Moab, which has a population of 5,333. Nonetheless, the site is remote in comparison with the remaining sites. The population density in the region is also very low--288 people are located within 10 miles of the site. The Hanford site is 15 miles from Sunnyside, which has a population of 9,229. The population density in the region is 43 persons per square mile. These two factors reduce the favorability of the site. There are only 110 residents within 10 miles of the Hanford site, and the 4,800 nuclear energy workers in the vicinity of the site are better prepared than other members of the general

public to deal with radiological hazards. The Deaf Smith site is 17 miles from Hereford, which has a population of 15,853. The population density in the region is 24 persons per square mile, and 1,739 people live within 10 miles of the site. The Richton site is proximate to the town of Richton, and 4,610 people live within 10 miles. The population density in the region is 40 persons per square mile. Since there are 140 people and a school within the controlled area, and the highly populated area of Petal and Hattiesburg with a population of 49,300 is 16 miles away, the Richton Dome is the least favorable site for this guideline.

7.3.1.1.2 Site ownership and control

The qualifying condition for site ownership and control is as follows:

> The site shall be located on land for which the DOE can obtain, in accordance with the requirements of 10 CFR 60.121, ownership, surface and subsurface rights, and control of access that are required in order that surface and subsurface activities during repository operation and closure will not be likely to lead to radionuclide releases to an unrestricted area greater than those allowable under the requirements specified in §960.5-1(a)(1).

Major consideration

On the basis of the qualifying, favorable, and potentially adverse conditions of this guideline (Table 7-10), one major consideration is identified that influences the favorability with respect to the qualifying condition. It refers to the kinds of procedures that are available for acquiring land. The major consideration is, in turn, influenced by two contributing factors.

Evaluation of the sites in terms of to the major consideration

The single major consideration for this guideline is the complexity of procedures for acquiring the needed land. This consideration is derived from the favorable condition and the potentially adverse condition (see Table 7-10). The favorable condition addresses whether the DOE has present ownership and control of the site. The potentially adverse condition identifies three means of acquiring land: voluntary purchase-sell, condemnation, and undisputed agency-to-agency transfer. If the DOE is unable to acquire land through one of these means, Congressional action will be required. Each of these land-acquisition mechanisms involves different legal procedures.

There are two ways the DOE can acquire private or State land: voluntary purchase-sell and condemnation. Voluntary purchase-sell means that a landowner voluntarily sells his land to the DOE under the provisions of the Uniform Relocation Assistance and Real Property Acquisition Act of 1970. If a landowner is not willing to sell needed property, the DOE can acquire it by right of eminent domain, or condemnation, under the provisions of the Declaration of Taking Act (40 USC Section 258a). The DOE estimates that about 90 days would be required to condemn privately owned land.

Table 7-10. Guideline-condition findings by major consideration--site ownership and control (preclosure)[a,b]

Condition[c]	Davis Canyon	Deaf Smith	Hanford	Richton Dome	Yucca Mountain
Favorable condition					
Present ownership and control of land and all surface and subsurface mineral and water rights by the DOE.	NP	NP	P	NP	NP
Potentially adverse condition					
Projected land-ownership conflicts that cannot be successfully resolved through voluntary purchase-sell agreements, nondisputed agency-to-agency transfers of title, or Federal condemnation proceedings.	P	NP	NP	NP	P

[a] Key: NA = not applicable; NP = for the purpose of this comparative evaluation, the favorable or potentially adverse condition is not present at the site; P = for the purpose of this comparative evaluation, the favorable or potentially adverse condition is present at the site.

[b] Analyses supporting the entries in this table are presented in Chapter 6 of the environmental assessment for each site.

[c] Both conditions in this table are related to one major consideration: complexity of procedures for acquiring needed land.

8 0 0 0 8 1 0 1 0

There are two ways that the DOE can obtain jurisdiction over lands that are currently controlled by another Federal agency: agency-to-agency transfers and legislative transfer by Congress. The DOE can acquire land from another Federal agency for up to 20 years under the provisions of the Federal Land Policy and Management Act of 1976. However, to meet the requirements of applicable NRC regulations (10 CFR 60.121), the DOE must obtain permanent jurisdiction over the repository operations area and the controlled area. This permanent withdrawal will require a legislative transfer.

In evaluating the sites against this guideline, the DOE considered what property would be required for repository construction, operation, closure, and decommissioning. Land-acquisition procedures, such as leasing, that might be employed during site characterization were not considered.

Sites for which land will be easier to acquire from a procedural and legal point of view are more favorable. This does not mean that the DOE discounts the socioeconomic impact of acquiring lands, especially privately owned land. The socioeconomic impacts of land acquisition are considered under the socioeconomics guideline. The DOE recognizes, for example, that the condemnation of privately owned lands will disrupt the lives of displaced landowners. Nevertheless, condemnation is legally more straightforward than obtaining the Congressional authorization that would be needed to acquire certain lands under the control of other Federal agencies. The DOE estimates that about 90 days would be required for condemnation, whereas a Federal-land transfer requiring Congressional authorization could take longer and the result could be less certain. Thus, from a strictly procedural point of view, it is easier for the DOE to acquire permanent jurisdiction over State and private lands than Federal lands.

The complexity of procedures for acquiring land depends, in turn, on current ownership (DOE, other Federal agency, State, or private) and the number of landowners. Current ownership determines which acquisition procedures are available. Similarly, the greater the division among landowners (Federal, State, private), the more complicated the overall land-acquisition procedures. A summary of the evaluation for each site follows.

Most of the Davis Canyon site is Federal land controlled by the Bureau of Land Management (BLM), although small portions are owned by the State of Utah and private parties. A Congressional action would be required to obtain permanent jurisdiction over the BLM portion of the site. Although the DOE would prefer to acquire State and private lands by voluntary purchase-sell agreements, the land could be acquired by condemnation if necessary.

The Deaf Smith site is privately owned, and ownership is divided among at least eight parties. The Richton site is also on private lands with ownership divided among many parties. Although the DOE would prefer voluntary purchase-sell agreements with the current owners, the land can be acquired by condemnation.

The DOE controls all surface and subsurface rights to the Hanford site and the surrounding area. The DOE would not have to acquire any land for a repository at Hanford.

8 0 0 0 8 1 0 1 1

The Federal land of the Yucca Mountain site is under the control of three agencies: the DOE, the BLM, and the Department of Defense (the Air Force). Congressional action would be required to permit a permanent transfer of land from the BLM and the Air Force to the DOE, but the action is not expected to be disputed by these agencies.

Summary of the comparative evaluation

The Hanford site is the most favorable for the preclosure guideline on site ownership and control because the DOE has control over the entire site. The Deaf Smith and the Richton sites are on private land that can be acquired by voluntary purchase-sell agreements or the right of eminent domain. Control over the Yucca Mountain site is divided among three Federal agencies, and Congressional action would be required to permit a permanent transfer to the DOE. The Davis Canyon site is the least favorable because the ownership of land is divided among the BLM, the State of Utah, and private parties, and a combination of actions (voluntary purchase-sell agreements, condemnation, and Congressional action) would be required to acquire the needed land.

7.3.1.1.3 Meteorology

The qualifying condition for meteorology is as follows:

> The site shall be located such that expected meteorological conditions during repository operation and closure will not be likely to lead to radionuclide releases to an unrestricted area greater than those allowable under the requirements specified in §960.5-1(a)(1).

Major considerations

The qualifying, favorable, and potentially adverse conditions for this guideline (see Table 7-11) led to the identification of two major considerations that influence favorability with respect to the qualifying condition. These major considerations, in order of decreasing importance, are (1) conditions that affect the transport of radionuclide releases in the atmosphere and the significance of transport, and (2) extreme weather phenomena. The transport consideration addresses prevailing meteorological conditions, while the extreme weather consideration addresses specific episodes. These major considerations are influenced by several contributing factors which are discussed below.

Evaluation of the sites in terms of the major considerations

Conditions that affect transport and the significance of transport. This major consideration addresses meteorological conditions that affect the transport of airborne radionuclide releases to unrestricted areas where the general public might be exposed. Contributing factors are the dispersion characteristics of the atmosphere, wind speed and direction, episodes of stagnation, atmospheric mixing levels, the terrain, and the locations of nearby populations. This is the most important major consideration under this guideline because the potential for a preferential transport of radionuclides

Table 7-11. Guideline-condition findings by major consideration--meteorology[a,b]

Condition[c]	Davis Canyon	Deaf Smith	Hanford	Richton Dome	Yucca Mountain
Favorable condition					
Prevailing meteorological conditions such that any radioactive releases to the atmosphere during repository operation and closure would be effectively dispersed, thereby reducing significantly the likelihood of unacceptable exposures to any member of the public in the vicinity of the repository.	NP	[illegible]	P	P	P
Potentially adverse condition 1					
Prevailing meteorological conditions such that radioactive emissions from repository operation and closure could be preferentially transported toward localities in the vicinity of the repository with higher population densities than are the average for the region.	P	P	P	P	NP
Potentially adverse condition 2					
History of extreme weather phenomena--such as hurricanes, tornadoes, severe floods, or severe and frequent winter storms that could significantly affect repository operation or closure.	P	P	NP	P	NP

[a] Key: NA = not applicable; NP = for the purpose of this comparative evaluation, the favorable or potentially adverse condition is not present at the site; P = for the purpose of this comparative evaluation, the favorable or potentially adverse condition is present at the site.

[b] Analyses supporting the entries in this table are presented in Chapter 6 of the environmental assessment for each site.

[c] All of the conditions in this table are related to one major consideration: conditions that affect transport and the significance of transport.

8 0 0 0 8 1 0 1 3

directly affects a site's ability to meet the requirements of the preclosure system guidelines on radiological safety. In terms of the significance of transport, the doses delivered to the maximally exposed person beyond the boundaries of the site are estimated to be well within the limits of 40 CFR 191 for each site. The estimate is based partly on estimates of radionuclide releases to unrestricted areas; at each site, these releases would be within the limits specified by the NRC in 10 CFR Part 20. A summary of the evaluation for each site follows.

For the Davis Canyon site, representative offsite data indicate that relatively high mixing heights and moderate average wind speeds prevail. Dispersion may be hampered by the rugged surrounding terrain, and local inversions (about 39 episode-days per year) can cause air to be trapped in valleys. The prevailing wind directions at the site are from the southwest. The only population concentration in the downwind direction within 50 miles of the site is La Sal Junction, which is 19 miles away.

For the Deaf Smith site, representative offsite data indicate that neutral atmospheric stability conditions and high average wind speeds predominate, resulting in relatively good dispersion conditions. The prevailing mixing level, the infrequent occurrences of stagnation episodes, and the generally flat terrain at the site also favor dispersion. The prevailing wind directions at the site are from the southwest. The nearest population concentrations in the downwind direction are Masterson and Exell, which are both about 50 miles away.

The data recorded at the Hanford Meteorological Station indicate that dispersion conditions at the Hanford site are generally good. Favorable conditions include moderate average wind speeds and deep mixing levels. The prevailing wind directions are from the northwest. The Tri-Cities area (Richland, Kennewick, and Pasco) is 22 to 28 miles from the site in the predominant downwind direction.

Representative offsite data used for the analysis indicate that atmospheric stability and average wind-speed conditions favor fair to good dispersion. Mixing-level heights, the relative infrequency of stagnation episodes, and the flat to rolling terrain also favor good dispersion. The prevailing wind directions at the site are from the south and southeast. The nearest large population concentrations located in the downwind direction are Laurel and Bay Springs, which are 24 and 40 miles, respectively, from the site.

Meteorological data recorded at Yucca Flat indicate that wind velocities, atmospheric stability, and mixing heights at the site should provide effective atmospheric dispersion. Topographic conditions should also favor dispersion. The nearest population concentrations are Beatty, which is 19 miles to the west, and Amargosa Valley, which is 14 to 28 miles south of the site. Beatty and Amargosa Valley are downwind of the site less than 5 percent and about 10 percent of the time, respectively.

Extreme-weather phenomena. This major consideration addresses the historical frequency and intensity of extreme-weather phenomena--such as hurricanes, tornadoes, floods, and winter storms--that could have a significant effect on repository operation or closure. It relates to the

8 0 0 0 8 1 1 0 1 4

concern in the qualifying condition with meteorological conditions that could lead to unacceptable levels of exposure to persons in unrestricted areas. It is derived from the second potentially adverse condition of the meteorology guideline. This consideration is less important than the first major consideration because, unlike atmospheric transport characteristics, which tend to reflect prevailing meteorological conditions, extreme-weather phenomena are episodic conditions. A summary of the evaluation for each site follows.

Hurricanes are not known to occur in the Davis Canyon site area, and tornadoes are unlikely. The area is not subject to heavy snowfalls, but snowfalls greater than 1 inch occur 10 to 20 days per year. Local flooding or local heavy fog may occur about 8 days per year.

Extreme weather such as local flooding, hurricanes, tornadoes, freezing rain, and heavy fog occur in the area of the Deaf Smith County site about 29-31 days per year. The area also experiences dust storms with winds exceeding 65 mph. There are usually snowstorms less than one day per year.

Extreme-weather conditions occur infrequently at the Hanford site. Tornadoes are rare, and severe winter storms are seldom experienced.

Local flooding, hurricanes, tornadoes, and heavy fog occur in the Richton site area 30 to 70 days a year. Freezing rain, high winds, or snowstorms usually occur less than one day per year.

The frequency of extreme weather at the Yucca Mountain site is among the lowest in the nation. High winds, snowfall, and tornadoes are rare, and the area does not experience severe local flooding. Sandstorms are common, but they would rarely be severe enough to disrupt repository operation.

Summary of comparative evaluation

The Yucca Mountain site is the most favorable under the meteorology guideline. Meteorological data from Yucca Flat suggest that good dispersion conditions are likely to prevail at the site. Prevailing winds would not be likely to preferentially transport radionuclides toward population concentrations. The Yucca Mountain area has a low frequency and magnitude of extreme weather. Meteorological data from the Hanford Site show good dispersion conditions and a low incidence of extreme weather. The favorability of the Hanford site is reduced by the presence of major population centers in the prevailing downwind direction. The Deaf Smith and the Richton sites are both expected to have good dispersion characteristics. Their favorability is reduced in comparison to the Hanford site because they experience more severe weather. Davis Canyon is the least favorable for meteorology. The favorability of this site is reduced by the presence of a population center in the prevailing downwind direction, reduced dispersion conditions, and a greater frequency of severe weather.

7.3.1.1.4 Offsite installations and operations

The qualifying condition for the preclosure guideline on offsite installations and operations is as follows:

> The site shall be located such that present projected effects from nearby industrial, transportation, and military installations and operations, including atomic energy defense activities, (1) will not significantly affect repository siting, construction, operation, closure, or decommissioning or can be accommodated by engineering measures and, (2) when considered together with emissions from repository operation and closure, will not be likely to lead to radionuclide releases to an unrestricted area greater than those allowable under the requirements specified in §960.5-1(a)(1).

Major considerations

On the basis of the qualifying, favorable, and potentially adverse conditions for this guideline (see Table 7-12), two major considerations influence a site's favorability with respect to the qualifying condition. These major considerations, in order of decreasing importance, are (1) the presence of nearby nuclear installations or operations and (2) the presence of nearby hazardous installations or operations.

Evaluation of sites in terms of the major considerations

Nearby nuclear installations or operations. This major consideration addresses radionuclide releases from atomic-energy defense activities and nuclear installations regulated by the NRC, which could, together with operational releases from the repository, subject the general public to radionuclide exposures above allowable limits. The evaluation accounts for the proximity of nuclear installations and operations to the site and the levels of radionuclide releases that could be expected during accidents and routine operating conditions at these installations. This consideration is derived from the favorable condition and the second potentially adverse condition. It relates directly to the qualifying condition's concern with the potential contribution of other nuclear facilities to radionuclide releases from the repository. This major consideration is assigned greater importance than nearby hazardous installations in this evaluation because of the primary focus in the qualifying condition on compliance with regulations on releases.

In evaluating this consideration, the term "nearby" for offsite installations and operations is defined as the area within 5 miles of the site. The assessment of potential cumulative impacts considers nuclear facilities within 50 miles. A summary of this consideration for each site follows.

At the Davis Canyon site, the only nearby nuclear operations are three uranium mills, which are 36 to 58 miles from the site. The combined radionuclide releases from the uranium mills and a repository at the site would be significantly lower than the specified limits.

8 0 0 0 8 1 0 1 6

Table 7-12. Guideline-condition findings by major consideration--offsite installations and operations[a,b]

Condition	Davis Canyon	Deaf Smith	Hanford	Richton Dome	Yucca Mountain
MAJOR CONSIDERATION 1: NEARBY NUCLEAR INSTALLATIONS OR OPERATIONS					
Favorable condition 1					
Absence of contributing radioactive releases from other nuclear installations and operations that must be considered under the requirements of 40 CFR 191, Subpart A.	NP	NP	NP	P	P
Potentially adverse condition 2					
Presence of other nuclear installations and operations, subject to the requirements of 40 CFR Part 190 or 40 CFR 191, Subpart A, with actual or projected releases near the maximum value permissible under those standards.	NP	NP	NP	NP	NP
MAJOR CONSIDERATION 2: NEARBY HAZARDOUS INSTALLATIONS OR OPERATIONS					
Potentially adverse condition 1					
The presence of nearby potentially hazardous installations or operations that could adversely affect repository operation or closure.	NP	P	P	P	P

[a] Key: NA = not applicable; NP = for the purpose of this comparative evaluation, the favorable or potentially adverse condition is not present at the site; P = for the purpose of this comparative evaluation, the favorable or potentially adverse condition is present at the site.

[b] Analyses supporting the entries in this table are presented in Chapter 6 of the environmental assessment for each site.

8 0 0 0 8 1 0 1 7

The Deaf Smith site is 48 miles from the Pantex Plant, a major atomic energy defense facility near Amarillo. Releases from this plant are predicted to be only a small fraction of the specified limits and would not significantly contribute to radionuclide levels in the vicinity of the repository. There are no other nuclear facilities in the vicinity.

Commercial nuclear facilities near the Hanford site include one operating nuclear power plant of the Washington Public Power Supply System, commercial site for the disposal of low-level radioactive waste, and a plant that fabricates nuclear fuel. The predicted releases from these facilities are substantially less than the maximum permissible value and would not contribute significantly to radionuclide levels in the vicinity of the repository. DOE-owned nuclear facilities near the repository site include a plutonium-production reactor, the Purex reprocessing plant, and a reactor for testing breeder reactor fuels and components. The postulated worst-case accident at these facilities would result in a radiation exposure at the boundary of the Hanford Site that would be below applicable limits.

The Richton site has no nearby nuclear facilities, nor are there any facilities subject to 40 CFR Part 190 or 40 CFR Part 191, Subpart A, within 50 miles of the site.

At the Yucca Mountain site, there are no nearby nuclear facilities that are subject to 40 CFR Part 190 or 40 CFR Part 191, Subpart A. Potential sources of radionuclide emissions in the area are a commercial site for low-level-waste disposal about 19 miles west of Yucca Mountain, and the research with spent fuel at the Nevada Research and Development Area, which is adjacent to the east side of Yucca Mountain. The releases resulting from the postulated worst-case accident at these facilities would culminate in total radiation releases at the Nevada Test Site boundary below applicable limits. Most of the radioactive emissions from underground nuclear testing at the Nevada Test Site are contained.

Nearby hazardous installations or operations. This major consideration addresses the possible adverse effects of nearby hazardous operations and installations on repository siting, construction, operation, closure, or decommissioning. Such operations and installations could include chemical plants; fuel production, refining, transportation, and storage facilities; pipelines; major transportation routes used that could carry hazardous materials; air traffic associated with nearby airports; military operations areas; toxic materials handling facilities; and sites for hazardous-waste disposal. These facilities or operations are considered hazardous if they could affect repository operations or worker safety. Potential hazards could include shock waves from explosions, incendiary fragments, and flammable or toxic vapor clouds. This major consideration is derived from the first potentially adverse condition. It relates directly to the concern in the qualifying condition with adverse impacts of nearby hazardous installations and operations on repository operation or closure. A summary of the evaluation for each site follows.

At Davis Canyon, there are no hazardous installations within 5 miles. The site is more than 35 miles from the airports at Blanding and Monticello and more than 18 miles from the San Juan County airport. The nearest State

8 0 0 0 8 1 0 1 8

highway is more than 5 miles from the site. Therefore, there are no hazardous installations or operations that are likely to affect a repository at Davis Canyon.

At the Deaf Smith County a 4-inch natural-gas pipeline passes within 3,000 feet of the restricted area, but it does not constitute a hazard to a repository. U.S. Highway 385 passes within 3 miles of the site. Trucks using this highway may carry hazardous cargoes that could affect the repository in a serious transportation accident.

Potentially hazardous installations and operations in the vicinity of the Hanford site include national defense and waste-management facilities. Potentially hazardous facilities include a plutonium-production reactor, a reprocessing plant within 1.8 miles of the site, and a reactor for testing breeder reactor fuels and components within 12 miles of the site. A serious accident at any of these facilities would disrupt repository operations.

The Richton site has several nearby potentially hazardous installations and operations. The Richton Airport is within 3 miles of the site, but the probability of an air crash at the site is extremely low. A portion of the restricted airspace of the DeSoto Military Operations Area is within 5 miles. Future expansion or a more intensive use of the restricted airspace could increase the risk of an airplane crash. A 16-inch underground gas pipeline passes 1 mile from the site, but it does not constitute a credible hazard to a repository. There are two producing oil fields within 3 miles of the site. Explosions or fires at these facilities are unlikely to affect a repository at the site. State Highways 42 and 15 pass within 2 and 3 miles of the site, respectively. These highways could be used for hazardous cargoes. The nearest railroad is more than 12 miles from the Richton site.

The Yucca Mountain site has several nearby hazardous installations and operations, including the underground testing of nuclear devices, an Air Force range, and the Nevada Research and Development Area. Underground testing of nuclear weapons occurs about 10 to 20 times per year at the Nevada Test Site, which is more than 24 miles from Yucca Mountain. Some of this testing might require that underground repository activities be temporarily suspended. The Yucca Mountain site occupies a small portion of the Nellis Air Force Range, which is used for aircraft overflights but not as a target area. The only potential hazard from these overflights is the very remote chance that an airplane carrying ordinance could crash at Yucca Mountain. Research with spent fuel is performed at the Nevada Research and Development Area, which includes a major portion of Yucca Mountain. (The spent fuel is tentatively scheduled for removal in 1986.) However, these research activities are not likely to affect repository operations.

Summary of comparative evaluations

The Davis Canyon and the Richton sites are the most favorable for the guideline on offsite installations and operations. There are no nuclear facilities or other facilities subject to 40 CFR Part 190 or 40 CFR Part 191, Subpart A, located within 50 miles of the Richton site. Potentially hazardous facilities near the site include a major State highway, a gas pipeline, an oil

8 0 0 0 8 1 0 1 9

field, an airport, and restricted airspace associated with Camp Shelby. However, these facilities detract less from a site's favorability than a nearby nuclear installation would. At Davis Canyon, the only potential sources of radioactive emissions in the area of the site are three uranium mills. Radionuclide releases from these facilities would not contribute significantly to releases from a repository. There are no nearby hazardous installations or operations that are likely to pose a credible risk to a repository. The Deaf Smith site is slightly less favorable. The only potential source of radioactive emissions is the Partex plant, but the contributions from this plant are not expected to be significant. Potentially hazardous installations and operations near the site include a major U.S. Highway. There are no nuclear facilities subject to 40 CFR Part 190 or Part 191, Subpart A, located near the Yucca Mountain site. Nonetheless, several potential sources of radioactivity that reduce its favorability are within 50 miles, including nuclear weapons testing and radioactive-waste disposal. The Hanford site is the least favorable for this guideline: there are potentially hazardous national defense facilities or other facilities subject to 40 CFR Part 190 near the Hanford site that could affect repository operations.

7.3.1.2 Preclosure system guideline for radiological safety

The preclosure system guideline for radiological safety requires that any projected radiological exposures of the general public and any projected releases of radioactive materials to restricted and unrestricted areas during repository operation and closure shall meet the applicable requirements set forth in 10 CFR Part 20, 10 CFR Part 60, and 40 CFR 191, Subpart A. The evidence does not support a finding that any of the sites is not likely to meet this qualifying condition.

The pertinent system elements are (1) the site-specific characteristics that affect radionuclide transport through the surroundings; (2) the engineered components whose function is to control releases of radioactive materials; and (3) the people who, because of their location and distribution in unrestricted areas, may be affected by radionuclide releases. This guideline is assigned the greatest importance among the preclosure system guidelines because it is directed at protecting both the public and the repository workers from exposures to radiation. To provide a comparative context for understanding the evaluation for this preclosure system guideline in Chapter 6, a brief summary of the evaluation of each of the sites with respect to the pertinent system elements is presented below.

With the exception of meteorological conditions, the Davis Canyon site has favorable characteristics for preclosure radiological safety. From an integrated-system viewpoint, atmospheric dispersion conditions that could be poor at times are not likely to prevent compliance with the radiation protection requirements. However, radioactivity releases from a repository are predicted to be small and are expected to more than compensate for the less than favorable atmospheric dispersion. Modeling results indicate that no member of the public is likely to receive an annual whole-body dose of more than 1.3 millirem during the construction period or more than 1.8 millirem

8 0 0 0 8 1 0 2 0

in any year during the operational period. On comparing these values with the regulatory limits (40 CFR Part 191) of 25 millirem per year to the whole body or approximately 140 millirem per year from natural background radiation, it appears that a repository can be located and operated at the Davis Canyon site with insignificant radiological risks to the public.

The Deaf Smith site also has generally favorable characteristics for preclosure radiological safety. A potentially adverse condition is that the dominant wind direction is from the south, and the city of Vega is approximately 8 miles to the north. However, the radioactive releases from the repository are predicted to be very small, and therefore compliance is likely. Modeling results indicate that no member of the public is likely to receive an annual whole-body dose greater than 0.04 millirem during construction or greater than 0.17 millirem in any year from normal operations during the operational period. Comparing these values with the limits of 40 CFR Part 191 (25 millirem per year to the whole body) or with approximately 95 millirem per year from natural background, it appears that a repository at the Deaf Smith site would pose insignificant radiological risks to the public.

The Hanford site has favorable characteristics pertinent to preclosure radiological safety. The meteorological conditions in the area show good atmospheric dispersion and infrequent occurrences of extreme weather. Moreover, there are no permanent residents at the site. Because of the very small radionuclide releases from the repository, the low population density in the surrounding area and the distance from the repository to highly populated areas, routine repository operations would not be expected to exceed the regulatory limits for the exposure of the general public to radiation. The individual radiation doses from other operations in the vicinity of the Hanford Site are greater than that projected for the repository. These doses are monitored and are within applicable Federal standards.

At the Richton Dome, the site characteristics that are pertinent to preclosure radiological safety are generally favorable except for meteorological conditions, which could be poor at times, with occasional stagnant conditions. From an integrated-system viewpoint, these conditions are not likely to prevent compliance with the radiation-protection requirements. Radioactive releases from a repository are predicted to be very small, which would more than compensate for the less-than-favorable atmospheric dispersion conditions. Modeling results indicate that no member of the public is likely to receive an annual whole-body dose greater than 0.41 millirem during the construction period. A comparison with the limits of 40 CFR Part 191 (25 millirem per year to the whole body or approximately 10 millirem per year from natural background radiation), it appears that a repository at the Richton site can be operated without significant radiological risks to the public.

At Yucca Mountain the meteorological characteristics favor the ability of the site to limit exposure to radiation among workers and the public; the distribution of people who live outside the area would also restrict exposures. Estimates of both the extreme worst-case accidental radiological exposures to the general public and the exposures due to normal operation are below the limits specified in 10 CFR Part 20 (1984), 10 CFR Part 60 (1983),

8 0 0 0 8 1 0 2 1

and 40 CFR 191, Subpart A (1985). Estimated releases under normal repository operation (Section 6.4.1) produce radionuclide concentrations that are well below the maximum permissible concentrations.

The evidence does not support a finding that any of the sites is not likely to meet the qualifying condition for preclosure radiological safety.

7.3.2 ENVIRONMENT, SOCIOECONOMICS, AND TRANSPORTATION

7.3.2.1 Technical guidelines

Three technical guidelines are associated with the preclosure system guideline on environmental quality, socioeconomics, and transportation. Their objective is to ensure that the public and the environment are protected from the effects of repository construction, operation, closure, and decommissioning.

7.3.2.1.1 Environmental quality

The qualifying condition for the environmental quality guideline is as follows:

> The site shall be located such that (1) the quality of the environment in the affected area during this and future generations will be adequately protected during repository siting, construction, operation, closure, and decommissioning, and projected environmental impacts in the affected area can be mitigated to an acceptable degree, taking into account programmatic, technical, social, economic, and environmental factors; and (2) the requirements specified in §960.5-1(a)(2) can be met.

Major considerations

On the basis of the qualifying, favorable, and potentially adverse conditions for this guideline (see Table 7-13), four major considerations are identified that influence the favorability of the sites with respect to the qualifying condition. These major considerations are (1) the ability to meet applicable environmental requirements, (2) the ability to mitigate environmental impacts, (3) the absence of protected Federal resource areas as well as threatened and endangered plant and animal species, and (4) the absence of protected State or regional resource areas, Native American resources, and cultural sites. As a group, major considerations 1 and 2 are more important than major considerations 3 and 4, but the factors within each group are considered to be of equal importance.

Evaluation of sites in terms of the to major considerations

Ability to meet applicable environmental requirements. This major consideration addresses the procedural and substantive requirements of environmental regulations with which the repository must comply. It addresses

Table 7-13. Guideline-condition findings by major consideration--environmental quality[a,b]

Condition	Davis Canyon	Deaf Smith	Hanford	Richton Dome	Yucca Mountain
MAJOR CONSIDERATION 1: ABILITY TO MEET APPLICABLE ENVIRONMENTAL REQUIREMENTS					
Favorable condition 1					
Projected ability to meet, within time constraints, all Federal, State, and local procedural and substantive environmental requirements applicable to the site and the activities proposed to take place thereon.	NP	N	P	NP	P
Potentially adverse condition 1					
Projected major conflict with applicable Federal, State, or local environmental requirements.	NP	NP	NP	NP	NP
MAJOR CONSIDERATION 2: ABILITY TO MITIGATE ENVIRONMENTAL IMPACTS					
Favorable condition 2					
Potential significant adverse environmental impacts to present and future generations can be mitigated to an insignificant level through the application of reasonable measures, taking into account programmatic, technical, social, economic, and environmental factors.	NP	NP	P	NP	P
Potentially adverse condition 2					
Projected significant adverse environmental impacts that cannot be avoided or mitigated.	P	NP	NP	NP	NP
MAJOR CONSIDERATION 3: PROTECTED FEDERAL RESOURCE AREAS					
Potentially adverse condition 3					
Proximity to, or projected significant adverse environmental impacts of the repository or its support facilities on, a component of the National Park System, the National Wildlife Refuge System, the National Wild and Scenic Rivers System, the National Wilderness Preservation System, or National Forest Land.	P	NP	NP	P	NP
Potentially adverse condition 6					
Presence of critical habitats for threatened or endangered species that may be compromised by the repository or its support facilities.	NP	NP	NP	NP	NP

8 0 0 0 8 1 0 2 3

Table 7-13. Guideline-condition findings by major consideration--environmental quality[a,b] (continued)

Condition	Davis Canyon	Deaf Smith	Hanford	Richton Dome	Yucca Mountain
MAJOR CONSIDERATION 4: PROTECTED STATE OR REGIONAL RESOURCE AREAS, NATIVE AMERICAN RESOURCES, CULTURAL SITES					
Potentially adverse condition 4					
Proximity to, and projected significant adverse environmental impacts of the repository or its support facilities on, a significant State or regional protected resource area, such as a State park, a wildlife area, or a historical area.	P	NP	NP	NP	NP
Potentially adverse condition 5					
Proximity to, and projected significant adverse environmental impacts of the repository and its support facilities on, a significant Native American resource, such as a major Indian religious site, or other sites of unique cultural interest.	NP	NP	NP	NP	NP

[a] Key: NA = not applicable; NP = for the purpose of this comparative evaluation, the favorable or potentially adverse condition is not present at the site; P = for the purpose of this comparative evaluation, the favorable or potentially adverse condition is present at the site.

[b] Analyses supporting the entries in this table are presented in Chapter 6 of the environmental assessment for each site.

8 0 0 0 8 1 0 2 4

applicable site-specific regulations at the Federal, State, and local levels. A site's standing against this consideration is determined by evaluating the degree to which repository activities will comply with requirements as well as the ability to do so within specific time constraints. This consideration relates directly to the qualifying condition and the first favorable and potentially adverse conditions, which address the ability to comply with environmental requirements within time constraints. Because compliance with environmental requirements is a measure of the ability to protect the environment at a site, this consideration is a direct indicator of a site's ability to meet the qualifying condition for environmental quality. Table 6-2 and Table 6-3 in each EA (Table 6-9 and Table 6-10 in the Yucca Mountain EA) summarize actions that are planned at the sites to ensure they comply with applicable requirements and review their ability to meet each requirement. A summary of the evaluation for each site follows.

The Davis Canyon site is expected to meet all potentially applicable environmental requirements. However, it may not be possible to do so within time constraints because of uncertainties about the time required to obtain certain permits, such as those required under the Utah Air Conservation Act.

The Deaf Smith site is expected to meet all potentially applicable environmental requirements. However, it may not be possible to do so within time constraints because of uncertainties regarding the time required to comply with requirements like the Texas Drilled and Mined Shaft Act.

The Hanford site is an area that has been dedicated to nuclear activities since 1943. The environmental requirements are known for the area, and it is expected that the site will be able to meet the potentially applicable environmental requirements within time constraints.

The Richton and Yucca Mountain sites are expected to meet all potentially applicable environmental requirements, but the Richton site may not do so within time constraints because of uncertainties regarding the time to obtain certain permits.

Ability to mitigate environmental impacts. This consideration evaluates the significance of the environmental impacts of the repository and accounts for the degree to which impacts can be mitigated. It also considers features of the mitigation measures, such as their time requirements and technological feasibility, and the social, economic, or environmental factors that affect their applicability to a particular site. This consideration relates directly to the qualifying condition and the second favorable and potentially adverse conditions, which address the ability to mitigate impacts at each site. Because of its direct relevance to the qualifying condition, the environmental-impact consideration is a direct indicator of a site's ability to meet the qualifying condition for the environmental-quality guideline. A summary of the evaluation for this consideration for each site follows.

It is projected that all potentially significant impacts at the Davis Canyon site can be avoided or mitigated to an acceptable level. However, extensive mitigation measures would be required because of the close proximity of Canyonlands National Park. Although it is projected that all applicable environmental impact standards can be met, some impacts cannot be mitigated to insignificant levels. For example, construction and operation noise will be audible within Canyonlands National Park, and access corridors and facilities

will be visible from the Park. Night-sky glow from project lighting may also be visible within the Park.

It is projected that all potentially significant impacts at the Davis Canyon site can be avoided or mitigated to an acceptable level and all applicable environmental standards can be met. However, extensive mitigation measures would be required because of the close proximity of Canyonlands National Park. Furthermore, some impacts cannot be mitigated to insignificant levels. For example, construction and operation noise will be audible within the Canyonlands National Park, and access corridors and facilities will be visible from the Park. Night skyglow from repository lights may also be visible within the Park.

At the Deaf Smith site, it is projected that all potentially significant impacts can be avoided or mitigated to an acceptable level and that all applicable environmental standards can be met. However, some impacts cannot be mitigated to insignificant levels. For example, about 5,760 acres of farmland will be permanently removed from production.

At the Hanford site, all potentially significant impacts can be avoided or mitigated to insignificant levels. No noise or air-quality impacts are expected outside the boundary of the larger Hanford Site, and no impacts are projected for the Columbia River. Potential impacts associated with offsite developments will be mitigated through siting and engineering measures.

At the Richton site, it is projected that all potentially significant impacts can be avoided or mitigated to an acceptable level, and that all applicable environmental standards can be met. However, some impacts cannot be mitigated to insignificant levels. The repository will be visible, and noise will be audible in offsite areas.

It is projected that all potentially significant impacts at the Yucca Mountain site can be avoided or mitigated to insignificant levels. Air-quality impacts at the controlled-area boundary will be maintained within the limits specified in applicable regulations. Releases of radioactivity from naturally occurring material will increase during the excavation of the underground facility, but they are not expected to be significant.

Protected Federal resource areas. This consideration relates directly to the third and sixth potentially adverse conditions. It addresses the following Federal lands that are identified in these conditions: the National Park System, the National Wildlife Refuge System, the National Wild and Scenic Rivers System, the National Wilderness Preservation System, and National Forest Land, as well as designated critical habitats for threatened or endangered species. The evaluation of sites for this consideration is based on their proximity to, and the degree of projected impacts on, the listed areas, except for critical habitats. Critical habitats are considered on the basis of whether they could be compromised by the repository. Because this consideration addresses the protection of environmental quality in terms of a subset of environmental conditions (i.e., specifically identified resource areas), it is relatively less important in the overall evaluation of sites than the first two considerations. A summary of the evaluation for each site follows.

8 0 0 0 8 0 1 0 2 6

The repository operations area at the Davis Canyon site is within 1 mile of the eastern boundary of the Canyonlands National Park and is considered to be proximate to the Park. Impacts on the park include increased suspended particulate and nitrogen oxides, increased noise levels, visibility of repository facilities, temporarily disrupted access, and night skyglow. There are no known or designated critical habitats for threatened or endangered species that could be compromised by the repository or its support facilities, although there are crucial riparian habitats.

The Federal resource area nearest to the Deaf Smith site, the Buffalo Lake National Wildlife Refuge, is 22 miles from the site. No significant adverse impacts are projected for this resource. There are no critical habitats for threatened or endangered species within the site or site vicinity that could be compromised by the repository or its support facilities.

The Hanford site is on Federal land not designated for protection. The site is 4 miles from the Saddle Mountains Wildlife Refuge (a multipurpose area of the Hanford Site) and 16 miles from the McNary National Wildlife Refuge. No significant adverse impacts are projected for these wildlife refuges. No federally recognized threatened or endangered species are known to inhabit the Hanford site, though several species (e.g., the bald eagle and the peregrine falcon) have been sighted within the site. Three species of birds that are candidates for designation as threatened or endangered nest within or near the site.

The Richton site is 2.5 miles from the DeSoto National Forest, but no significant adverse impacts are projected for the forest. There are no known or designated critical habitats for threatened or endangered species that could be compromised by the repository or its support facilities.

At the Yucca Mountain site, the northern part of the controlled area is 5 miles from the Timber Mountain Caldera National Natural Landmark, which lies within the Nellis Air Force Range and the Nevada Test Site. The Toiyabe National Forest is about 50 miles from the site, and the Death Valley National Monument is 20 to 25 miles from the site. The rail line to the site will pass within several miles of the Desert National Wildlife Range, parts of which are suitable for inclusion in the Wilderness Preservation System. There are no critical habitats at the Yucca Mountain site. Ash Meadows, which contains several protected species, is about 25 miles away. No significant adverse impacts are projected for any designated Federal lands or protected species.

Protected State or regional resource areas, Native American resources, and cultural sites. This consideration relates directly to the fourth and fifth potentially adverse considerations. The fourth potentially adverse condition identifies three significant State or regionally protected resource areas: State parks, wildlife areas, and historical areas. The fifth potentially adverse condition requires an evaluation of significant Native American resources, such as religious sites, and other sites of unique cultural interest. The evaluation addresses the combined effects of a site's proximity to resource areas and the projected level of impact on those areas. Because this consideration addresses the protection of environmental quality in terms of a subset of environmental conditions (i.e., specific resource areas), it is equal in importance to the third consideration but less important than the first two considerations. A summary of the evaluation for each site follows.

The Newspaper Rock State Historical Monument is near Utah State Highway 211, 17 miles from the Davis Canyon site. The petroglyph panel at Newspaper Rock is a significant cultural resource and is listed on the National Register of Historic Places. The increased traffic flow past the Monument that would be associated with a repository at Davis Canyon will disrupt some visitation and overnight camping at the Monument. The nearest State park is the Dead Horse State Park, which is 30 miles away. The nearest significant Native American resource or site of unique cultural interest is the Salt Creek Archaeological District, which lies along the eastern edge of the Canyonlands National Park. Impacts of the repository and support facilities on these resources are not expected to be significant.

The State protected resource nearest to the Deaf Smith site is the Palo Duro Canyon State Park, located 44 miles away. Since no significant State, regional, or Native American resources are known to be present in the area of the site, no significant adverse impacts are expected.

A repository at the Hanford site would not affect any protected resource area. There are no known significant State, regional, or Native American resources within or adjacent to the site. There are significant Native American resources along the shorelands of the Columbia River, 4 miles from the site, but no significant adverse impacts are projected for these resources.

The nearest State or regionally protected resource to the Richton site is the Paul E. Johnson State Park, which is 20 miles away. The park is not expected to experience any significant adverse impacts. There are no significant Native American resources or cultural sites recorded at the Richton site, and the potential for discovering such resources is considered low.

The Yucca Mountain site is not located near any State or regionally protected resource area. The rail corridor that would be constructed to the site is not projected to adversely affect any resource areas, although it will pass within 0.9 mile of the F. R. Lamb State Park. Most of the Yucca Mountain site has been surveyed for cultural artifacts. Limited investigations have identified 178 prehistoric and 6 historic sites, many of which consist of scattered debris. No major impacts are projected for any significant Native American resource or unique cultural site.

Summary of comparative evaluation

The Hanford and the Yucca Mountain sites are most favorable under the environmental-quality guideline. Both sites are expected to meet all major environmental requirements within time constraints. Adverse environmental impacts at both sites can be avoided or mitigated to insignificant levels. Since these sites are not near any protected Federal, State, or regionally protected resource, or near any significant Native American resource or site of unique cultural interest, the development of a repository at either of these sites is not projected to have significant impacts on any of these resources.

The Deaf Smith site can comply with all potentially applicable environmental requirements, but may not be able to do so within time constraints. Similarly, it is projected that adverse impacts at the site can be limited to acceptable, but not insignificant, levels. The Deaf Smith site

is favorable with regard to the third (protected Federal resource areas) and the fourth (protected State or Native American resources) major considerations because the site is not near any of the relevant resource areas and would not be expected to adversely impact such areas.

The Richton site is also expected to meet all applicable environmental requirements, although it may not be able to do so within time constraints. All adverse impacts at the site can be avoided or mitigated, but not to insignificant levels. The Richton site is less favorable than the Hanford, Yucca Mountain, and Deaf Smith sites with respect to protected Federal resource areas because of its proximity to the DeSoto National Forest. The Richton site is favorable with regard to the fourth consideration (protected State or Native American resources) because a repository at this site is not projected to cause adverse impacts on any State or regionally protected resource area, significant Native American resource, or site of unique cultural interest.

The Davis Canyon site is the least favorable for the environmental-quality guideline. It is projected that all potentially applicable environmental requirements can be met, but it may not be possible to do so within time constraints. It is also projected that adverse impacts can be mitigated to acceptable but not insignificant levels. The favorability of the Davis Canyon site is further reduced by its proximity to, and potential impacts on, the Canyonlands National Park and the Newspaper Rock State Historical Monument.

7.3.2.1.2 Socioeconomic impacts

The qualifying condition for the socioeconomics guideline is as follows:

> The site shall be located such that (1) any significant adverse social and/or economic impacts induced in communities and surrounding regions by repository siting, construction, operation, closure, and decommissioning can be offset by reasonable mitigation or compensation, as determined by a process of analysis, planning, and consultation among the DOE, affected State and local government jurisdictions, and affected Indian Tribes; and (2) the requirements specified in 960.5-1(a)(2) can be met.

Major considerations

On the basis of the qualifying, favorable, and potentially adverse conditions for this guideline (see Table 7-14), six major considerations are identified that influence the favorability of the sites with respect to the qualifying condition. These major considerations are (1) potential impacts on community services and housing, (2) potential impacts on direct and indirect employment and business sales, (3) potential impacts on primary sectors of the economy, (4) potential impacts on the revenues and expenditures of public agencies, (5) the need to purchase or acquire water rights that could affect development in the area, and (6) potential social impacts. No order of importance is assigned to these six considerations. Each consideration is, in turn, influenced by a number of more-specific conditions or contributing factors, which are discussed below.

Table 7-14. Guideline-condition findings by major consideration--socioeconomics[a,b]

Condition	Davis Canyon	Deaf Smith	Hanford	Richton Dome	Yucca Mountain
MAJOR CONSIDERATION 1: POTENTIAL IMPACTS TO COMMUNITY SERVICES AND HOUSING					
Favorable condition 1					
Ability of an affected area to absorb the project-related population changes without significant disruptions of community services and without significant impacts on housing supply and demand.	NP	P	P	P	P
Potentially adverse condition 1					
Potential for significant repository-related impacts on community services, housing supply and demand, and the finances of State and local government agencies in the affected area.	P	NP	NP	NP	NP
MAJOR CONSIDERATION 2: POTENTIAL IMPACTS ON DIRECT AND INDIRECT EMPLOYMENT AND BUSINESS SALES					
Favorable condition 2					
Availability of an adequate labor force in the affected area.	NP	NP	NP	NP	NP
Favorable condition 3					
Projected net increases in employment and business sales, improved community services, and increased government revenues in the affected area.	P	P	P	P	P
Potentially adverse condition 2					
Lack of an adequate labor force in the affected area.	P	P	P	P	P
MAJOR CONSIDERATION 3: POTENTIAL IMPACTS TO PRIMARY SECTORS OF THE ECONOMY					
Favorable condition 4					
No projected substantial disruption of primary sectors of the economy of the affected area.	P	P	P	P	P
Potentially adverse condition 4					
Potential for major disruptions of primary sectors of the economy of the affected area.	NP	NP	NP	NP	NP
MAJOR CONSIDERATION 4: POTENTIAL IMPACTS TO THE REVENUES AND EXPENDITURES OF PUBLIC AGENCIES					
Favorable condition 3					
Projected net increases in employment and business sales, improved community services, and increased government revenues in the affected area.	P	P	P	P	P

8 0 0 0 8 1 1 0 3 0

Table 7-14. Guideline-condition findings by major consideration--socioeconomics[a,b] (continued)

Condition	Davis Canyon	Deaf Smith	Hanford	Richton Dome	Yucca Mountain
MAJOR CONSIDERATION 4: POTENTIAL IMPACTS TO THE REVENUES AND EXPENDITURES OF PUBLIC AGENCIES (Continued)					
Favorable condition 3 (continued)					
Potentially adverse condition 1					
Potential for significant repository-related impacts on community services, housing supply and demand, and the finances of State and local government agencies in the affected area.	P	NP	NP	NP	NP
MAJOR CONSIDERATION 5: THE NEED TO PURCHASE OR ACQUIRE WATER RIGHTS THAT COULD EFFECT DEVELOPMENT IN THE AREA					
Potentially adverse condition 3					
Need for repository-related purchase or acquisition of water rights, if such rights could have significant adverse impacts on the present or future development of the affected area.	NP	NP	NP	NP	NP
MAJOR CONSIDERATION 6: POTENTIAL SOCIAL IMPACTS					
Favorable condition 1					
Ability of an affected area to absorb the project-related population changes without significant disruptions of community services and without significant impacts on housing supply and demand.	NP	P	P	P	P
Potentially adverse condition 1					
Potential for significant repository-related impacts on community services, housing, supply and demand, and the finances of state and local government agencies in the affected area.	P	NP	NP	NP	NP

[a] Key: NA = not applicable; NP = for the purpose of this comparative evaluation, the favorable or potentially adverse condition is <u>not</u> present at the site; P = for the purpose of this comparative evaluation, the favorable or potentially adverse condition is present at the site.

[b] Analyses supporting the entries in this table are presented in Chapter 6 of the environmental assessment for each site.

8 0 0 0 8 1 0 3 1

Evaluation of the sites in terms of the major considerations

Potential impacts on community services and housing. This consideration relates to the requirement in the qualifying condition that impacts on community services or housing in affected areas and communities can be mitigated or compensated for. This consideration is derived from the first favorable condition and the first potentially adverse condition. The first favorable condition focuses on the ability of the affected area to absorb repository-related population growth without disrupting community services and the supply and demand for housing. The potentially adverse condition addresses impacts on community services and housing in communities near a potential site. Impacts on community services and housing depend on five contributing factors: population composition and density, the distribution of in-migrants, current capacity and trends in the use of community services and infrastructure, housing supply and demand, and the community's ability to accommodate growth. A site's favorability improves as the combination of these contributing factors leads to fewer impacts on community services and housing. A summary of the evaluation for each site follows.

A repository at the Davis Canyon site is likely to result in substantial impacts on community services and housing in the affected area. The projected net change in the population of Grand and San Juan Counties is expected to be approximately 20 percent above the baseline population during the peak of in-migration. This level of population increase may cause a significant disruption in housing and community services. The number of housing units needed by repository-related households could reach 1,600 units. Fewer than half this number of units are currently available in the study area. The communities of Moab, Monticello, and Blanding are projected to have peak-year cumulative growth rates of 31, 50, and 24 percent, respectively. Although this level of growth would occur over a 6-year period, it would cause significant impacts.

The development of a repository at the Deaf Smith site is not expected to result in major impacts to community services or housing. Most project in-migrants are expected to locate in Amarillo, about 40 miles from the site. Amarillo is a large urban center that has a sufficient community infrastructure to accommodate repository workers and their families. Vega, which is the closest community to the site, is projected to experience a peak-year cumulative growth of 8 percent. Since this growth would occur over a 6-year period, it is not considered to have potential for significantly disrupting the community. However, in-migration is expected to cause some minimal increase in the demand for community services (e.g., housing, schools, police protection, medical services, water supply, and recreation) in the affected area.

The Tri-Cities (Richland, Kenewick, and Pasco) have historically received most of the in-migrating work force associated with large projects at the Hanford Site. If the most likely estimate of 1,700 in-migrants for the repository is used, annual growth rates during the peak year would be less than 4 percent for all communities. These annual growth rates are low in comparison with previous levels of growth in the area. There is also a large and underused infrastructure, particularly excess housing, in the Tri-Cities area. This suggests that the development of a repository at Hanford represents an opportunity for the area to more fully use its resources. Therefore, community-services and housing impacts are projected to be favorable.

For the Richton site, the capacity of housing in counties receiving in-migrants is expected to be adequate. Because the availability of community services generally parallels the availability of housing, these services are also expected to be adequate in the affected area. At a community level, the town of Richton is projected to experience a peak-year cumulative growth of 37 percent. This growth would occur over a 4-year period. Although the average annual growth rate is higher than the 6-percent growth rate projected for Richton's baseline population, significant disruption is not expected. Nonetheless, the in-migrating population is projected to cause moderate service impacts in the study area, including the need for some additional housing, teachers, police officers, physicians, hospital beds, and water and sewage facilities.

For the Yucca Mountain site, over 80 percent of the in-migrants are expected to settle in the Los Vegas area, where the infrastructure is sufficient to accommodate them. In the rural communities closer to the site, the maximum 1-year growth rates, which are projected from the historical settlement patterns of workers at the Nevada Test Site, will be less than 5 percent for all communities near the site except Pahrump (5 percent) and Indian Springs (13.2 percent). Although demands for services and housing in communities could increase in proportion to these peak 1-year growth rates, the potential impacts would be largely confined to the service providers that are best equipped for dealing with growth. Generally, services in the unincorporated communities near the site (i.e., Indian Springs, Pahrump, Beatty, and Amargosa Valley) are provided not by town governments but by county-wide agencies that have broad tax bases, planning capabilities, and experience in responding to population growth rates within the range of those projected for the repository. With only a few exceptions, water in the unincorporated communities near the repository site is supplied by private wells, and waste water is disposed of in private septic tanks and leach fields. In addition, housing in rural southern Nevada is provided almost entirely by the private sector.

Potential impacts on direct and indirect employment and business sales. This major consideration is derived from the second and the third favorable conditions and the second potentially adverse condition. Two factors contribute to the potential for increased direct and indirect employment and business sales: repository-related needs for labor and expected local hires, and repository-related local purchases of materials. This major consideration is related to the qualifying condition in that increased local employment and business sales enhance the ability of affected areas and communities to absorb repository-related growth by increasing business and tax revenues. A site's favorability increases with repository-related economic growth. A summary of the evaluation for each site follows.

At the Davis Canyon site, a repository is expected to generate over 2,000 direct and indirect jobs at its peak, of which about 400 are expected to be filled by local residents. The repository is also expected to generate about $5.4 million per year in local purchases during the construction phase.

At the Deaf Smith site, local residents are expected to fill 1,380 of the total number of jobs at the peak of repository development. Direct local purchases of about $11.3 million per year are projected during repository construction. An additional $5.7 million per year is expected to be spent as a result of indirect effects caused by material purchases.

At the Hanford site, total employment could increase by more than 2,400 at the peak of repository development. A substantial number of these jobs will be filled locally. In addition, substantial spending through wages and on purchases of materials from local suppliers is expected.

At the Richton site, the repository is expected to generate about 1,300 jobs for local residents at the peak of its development. In addition, about $5.3 million in direct local material purchases will be made during repository construction.

For the Yucca Mountain site, up to 4,800 jobs could be created during peak repository development. Many of these jobs are expected to be filled by current residents of the area. The increases in area income from wages for repository construction and operation could reach $110 million in 1998.

Potential impacts on primary sectors of the economy. The third major consideration is derived from the fourth favorable condition and fourth potentially adverse condition. The contributing factors are major sectors of the economy, employment distribution and trends by economic sector, and the compatibility of a repository with the area's economic base. The smaller any projected disruption, the greater the site's favorability. A summary of the evaluation for each site follows.

Primary sectors of the Davis Canyon study area are retail trade and services (31 percent of employment), government (24 percent of employment), and mining (14 percent of employment). Since unemployment in mining has increased significantly in the last 6 years, a repository may have a positive effect on this sector. The extent of this positive effect is unknown, because significant numbers of miners have left the area since 1983. The demands on local government created by new growth should create jobs in the government sector. In retail trade and services, tourism represents approximately 475 man-years of employment for San Juan and Grand Counties or about 24 percent of the jobs in these sectors. Because the Canyonlands National Park is near the repository, some tourists may choose to avoid the park, and some jobs related to tourism could be lost. The total number of jobs directly associated with purchases made by tourists with Canyonlands as their primary destination is approximately 76 man-years of employment. The local retail-and-service jobs directly related to local purchases associated with the repository will average 240 man-years of employment during construction and 230 man-years during operation. Therefore, while some tourism-related jobs in the retail and service sectors may be lost, other jobs are expected to be created.

The primary sectors of the Deaf Smith study area are government (18 percent), retail trade (15 percent), services (14 percent), agriculture (10 percent), and manufacturing (10 percent). It is expected that the repository will increase the need for products and services provided by the retail trade, government, and service sectors. No substantial loss of employment due to the repository is expected for the agricultural or manufacturing sectors because most of their markets are outside the region of the site. However, the sales of health foods and bottled water could decline. In addition, projected impacts on the agricultural sector include a loss of more than $1.6 million in crop and livestock revenues at the peak of construction (about 0.12 percent of the expected crop and livestock revenues in the region in 1997); a loss of $1.7 million in crop and livestock revenues at the peak of operation; a loss of $2.5 million and $3.0 million in agricultural business during the peak of

repository construction and operation, respectively; and a loss of 0.61 percent of the productive land in Deaf Smith County.

In the affected area of the Hanford site, the potential for major disruptions of primary sectors of the economy is very small. The primary sectors of employment are the Washington Public Power Supply System and its contractors, the DOE and its contractors, and agriculture. A repository at the Hanford site would probably stabilize economic conditions and employment in the area.

In the affected area of the Richton site, the primary economic sectors are manufacturing (21 percent), government (25 percent , and retail trade (22 percent). The repository is not expected to affect markets for manufactured goods. Employment in the trade and government sectors is likely to increase because of increases in wages, local purchases, business sales, and demands for services.

The primary sectors of the economy in southern Nevada are mining and tourism. A repository at Yucca Mountain is expected to increase the number of mining jobs in Nye County. In regard to tourism, even though repository-related increases in population may have a small positive effect, only potential negative impacts have been investigated to date. Preliminary results of an ongoing evaluation are inconclusive. Studies of the effects of well-publicized accidents have yielded no evidence of long-term effects on tourism.

Potential impacts on public agency revenues and expenditures. This consideration is derived from the third favorable condition and the first potentially adverse condition, which addresses the potential for increased revenues, and the net fiscal balances of State and local government agencies, respectively. This consideration relates to the qualifying condition in that the DOE must be able to mitigate adverse economic impacts, including impacts on the finances of State or local governments. Impacts on the revenues and expenditures of public agencies depend on three contributing factors: the sources of, and trends in, the expenditures and revenues of local government; the additional needs for community services induced by the repository project; and economic growth in the area and resulting increases in tax revenues. A site's favorability increases as the repository more positively affects State and local finances and decreases as more mitigation of fiscal impacts is required. A summary of the evaluation for each site follows.

At the Davis Canyon site, a repository will increase the revenues collected through property taxes, sales taxes, and user fees. These increases in revenues, however, may not offset increases in outlays for community services and infrastructure needs.

At the Deaf Smith site, the repository will also increase the revenues collected in property taxes, sales taxes, and user fees. These increases in revenues are expected to offset the projected minimal impacts on community services.

At the Hanford site, the State or local governments will not experience significant adverse fiscal impacts. There are virtually no projected impacts

on community services, and there are some economic benefits that will result in additional tax revenues.

The potential impact on the revenues and expenditures of public agencies affected by the Richton site is similar to that at the Deaf Smith site. Revenues from property taxes, sales taxes, and user fees are likely to increase. These revenue increases are expected to offset increases in expenditures due to changes in service requirements.

At the Yucca Mountain site, significant repository-induced expenditures are expected to result in increased State and local tax revenues, which may be offset by additional outlays in the study area.

Need to purchase or acquire water rights that could affect development in the area. This major consideration is derived from the third potentially adverse condition (see Table 7-14). The need to acquire water rights depends on two contributing factors: project-related water requirements and current water rights, use, and capacity. Specifically, the greater the competition for water at the site and the more the DOE's acquisition of water rights could affect development in the area, the lower the site's favorability. A summary of the evaluation for each site follows.

At the Davis Canyon site there is a variety of potential water sources. A likely source of water is the San Juan County Water Conservatory District, which has jurisdiction over the site. The Conservatory District has indicated that it would enter into an agreement for the annual sale or lease of up to 2,800 acre-feet of water from the Colorado River or one of its tributaries during construction and up to 500 acre-feet during the operation of the repository. Because the San Juan Planning Council expects that two new reservoirs that are being built in the Blanding and Monticello area will supply enough water for future needs and because the Council is willing to sell or lease part of its own appropriation, development in the area should not be affected.

The Ogallala aquifer, the major source of water for municipal use and irrigation in the Texas Panhandle and in the area of the Deaf Smith site, is being depleted. The Texas Water Commission predicts that only part of the projected water requirements for irrigated agriculture in 1990 will be met under a high-demand scenario. Although a repository at the Deaf Smith site will require relatively little water to operate in comparison with other industrial users in Texas and less than one-fourth of one percent of projected water supply in the County throughout the life of the repository, the water requirements of the repository will further deplete the aquifer and may compete with other users, especially agricultural users. Municipal and industrial water requirements are expected to be met because these users are able to pay the higher prices associated with more a limited supply.

The Federal Government already owns the water rights that are needed for a repository at the Hanford site. Water will be supplied from the Columbia River by an existing pump station. No significant impacts on municipal water systems in the study area are expected because there is excess capacity in the Tri-Cities area, where most in-migrants would live.

At the Richton site, the DOE will not need to acquire water rights because ground water is expected to be available at the site. In addition, no planned developments in the study area have been identified that would be adversely affected by the water use projected for the repository.

It is projected that sufficient water for a repository at Yucca Mountain can be obtained from new or existing wells at the Nevada Test Site, for which the DOE has existing water rights. For local water systems, secondary impacts due to the increased demand associated with population increases are expected to be minimal, although some communities may require mitigation assistance to expand their water systems to meet the needs of new in-migrants. There are no major developments or population centers that will compete with the repository for ground water. The Las Vegas Valley is projected to have water-supply problems by the year 2020 with or without the population increases resulting from the development of the repository.

Potential social impacts. This major consideration relates directly to the requirement in the qualifying condition that significant social impacts on communities and surrounding areas can be offset by reasonable mitigation or compensation. It also relates to the first favorable and potentially adverse conditions, which address the quality of life by focusing on impacts to community services and the finances of State and local government agencies. Three factors contribute to the potential for social impacts: the quality of life and existing social problems in the affected communities, the size of the in-migrating population in comparison with the existing population, and the compatibility of the in-migrating population with the lifestyles and characteristics of the current residents. The more compatible the in-migrating population with the current population and the fewer the disruptions that it causes, the greater the site's favorability. A summary of the evaluation for each site follows.

At the Davis Canyon site, it is estimated that Moab and Blanding will experience an increase of 31 and 24 percent, respectively, in population during the first 6 years of the repository. Monticello is expected to grow by about 50 percent during the same period. These increases would be dramatic and could lead to conflicts between long-time residents and newcomers over leadership positions. Rapid growth could also contribute to increases in alcohol and drug abuse, crime, and family conflict.

At the Deaf Smith site, Vega is expected to receive an 8-percent increase above the baseline population. On the basis of this population increase, Vega could experience some social changes. The lifestyles of construction workers may not be compatible with long-time residents, though most workers are expected to live in Amarillo or Hereford. Major conflicts over leadership positions between long-term residents and newcomers are not expected.

At the Hanford site, a repository will make a small but positive contribution to the recovery of the area from the decline of the early 1980s. The effect of any impacts on social conditions is likely to be positive. Since expected in-migrating work force is small in comparison with the projected baseline population, serious social disruptions are unlikely. The Yakima Indian Nation, the Confederated Tribes of the Umatilla Indian Reservation, and the Nez Perce Tribe are formally designated as affected

8 0 0 0 8 1 0 3 7

Indian Tribes under the Act. A repository at Hanford is not expected to cause significant social impacts on these Indian Tribes.

At the Richton site, the town of Richton is expected to receive 483 repository-related in-migrants, a 37-percent change over baseline projections for the peak year of construction. This repository-related growth for Richton is significant and will probably cause social changes and conflicts over leadership positions in the community.

For the Yucca Mountain site, most of the in-migrating population is projected to be absorbed in Clark County. Since the size of the in-migrating population is small in comparison with the projected baseline population, and the existing social structure in urban Clark County is highly diverse, the growth-related effects on social structure are not expected to be significant. In contrast, Nye County is a rural area where experience with large energy-development projects indicates that growth-related social disruptions could occur. However, preliminary assessments suggest that in-migrating construction workers would be assimilated within the existing social structure. Historically, communities in Nye County have had a large population of miners, and mining continues to be important in the area. Therefore, because of the diversity of existing cultural environments within Nye and Clark Counties, in-migrating workers would be able to select a compatible cultural environment and are likely to be readily assimilated into the community.

Summary of comparative evaluations

The Hanford site is the most favorable for all six major considerations. The Tri-Cities has a large and under-used infrastructure, and the area would benefit from repository-related employment and increases in business sales. The economy of the affected area is largely based on nuclear activities, although there is also substantial agriculture. No significant adverse fiscal or social impacts are expected, and the DOE owns all necessary water rights.

At the Yucca Mountain site, most of the in-migrants are expected to settle in the area of Las Vegas, which has a sufficient infrastructure to accommodate them. Services in the unincorporated communities nearer the site are generally provided by county-wide organizations that are well equipped to deal with growth. Both Nye and Clark Counties are expected to benefit from increased employment and business sales. Employment in the mining industry in Nye County is expected to increase substantially. The tourist industry is not expected to be negatively affected. Public revenues will probably increase, and social impacts are expected to be small. Sufficient water for the repository can be obtained from wells at the Nevada Test Site, and secondary impacts should be minimal.

At the Deaf Smith site, population growth may cause minimal adverse impacts on community services. Vega could also experience social changes because the lifestyles of newcomers and long-time residents may be incompatible. In addition, a repository is expected to cause minor disruption to the agricultural industry in the affected area. Some water may also be diverted from other uses because the DOE will need to acquire water rights in a region where the major source of water is being depleted. The area is expected to benefit from increased employment, business sales, and tax revenues.

At the Richton site, moderate impacts on community services are projected because of the population growth associated with a repository. Local purchases and job opportunities will increase, but adverse social impacts could occur, especially in the town of Richton. Primary sectors of the economy are not expected to be disrupted, and public revenues should increase. There is no need for the DOE to purchase or acquire water rights.

A repository at the Davis Canyon site is expected to induce major adverse impacts on community services and housing; these impacts will occur in San Juan County and in three small communities near the Davis Canyon site. In addition, a significant population growth may cause substantial social impacts. Although a small number of jobs related to tourism in the retail and service sectors may also be lost, net local employment, business sales, and tax revenues should increase. Water rights are likely to be obtained from the San Juan Planning Council without affecting present or future development.

7.3.2.1.3 Transportation

The qualifying condition for the transportation guideline is as follows:

> The site shall be located such that (1) the access routes constructed from existing local highways and railroads to the site (i) will not conflict irreconcilably with the previously designated use of any resource listed in 960.5-2-5(d)(2) and (3); (ii) can be designed and constructed using reasonably available technology; (iii) will not require transportation system components to meet performance standards more stringent than those specified in the applicable DOT and NRC regulations, nor require the development of new packaging containment technology; (iv) will allow transportation operations to be conducted without causing an unacceptable risk to the public or unacceptable environmental impacts, taking into account programmatic, technical, social, economic, and environmental factors; and (2) the requirements of Section 960.5-1(a)(2) can be met.

Major considerations

On the basis of the qualifying, favorable, and potentially adverse conditions for this guideline (see Table 7-15), four major considerations are identified that influence the favorability of sites with respect to the qualifying condition. These major considerations, in order of decreasing importance, are (1) transportation safety, (2) potential for environmental disruption, (3) the cost of transportation infrastructure, and (4) the cost of transportation hardware and operations. Each of the major considerations is, in turn, influenced by several contributing factors, which are discussed below.

Evaluation of the sites with respect to major considerations

Transportation safety. Transportation to the repository will present a potential hazard, albeit small, to people living along the routes traveled. The hazards are both radiological (i.e., due to the radiological nature of the cargo) and nonradiological (i.e., due to the movement of the transport vehicle and not related to the character of the cargo). The guidelines emphasize that

8 0 0 0 8 1 0 7 0

Table 7-15. Guideline-condition findings by major consideration--transportation[a,b]

Condition	Davis Canyon	Deaf Smith	Hanford	Richton Dome	Yucca Mountain
MAJOR CONSIDERATION 1: THE SAFETY OF TRANSPORTING SPENT FUEL AND HIGH-LEVEL WASTE TO THE REPOSITORY					
Favorable condition 1	NP	P	P	P	P
Availability of access routes from local existing highways and railroads to the site which have any of the following characteristics:					
(i) Such routes are relatively short and economical to construct as compared to access routes for other comparably siting options.	NP	NP	P	NP	NP
(iv) Such routes are free of sharp curves or steep grades are not likely to be affected by landslides or rock slides.	NP	P	P	P	P
(v) Such routes bypass local cities and towns.	NP	P	P	NP	P
Favorable condition 2	NP	P	P	NP	P
Proximity to local highways and railroads that provide access to regional highways and railroads and are adequate to serve the repository without significant upgrading or reconstruction.					
Favorable condition 4	NP	NP	NP	NP	P
Availability of a regional railroad system with a minimum number of interchange points at which train crew and equipment changes would be required.					
Favorable condition 5	NP	NP	NP	P	NP
Total projected life-cycle cost and risk for transportation of all wastes designated for the repository site which are significantly lower than those for comparable siting options, considering locations of present and potential sources of waste, interim storage facilities, and other repositories.					
Favorable condition 8	P	P	P	P	P
Plans, procedures, and capabilities for response to radioactive waste transportation accidents in the affected State that are completed or being developed.					
Favorable condition 9	P	P	P	P	P
A regional meteorological history indicating that significant transportation disruptions would not be routine seasonal occurrences.					

8 0 0 0 8 0 1 0 4 0

Table 7-15. Guideline-condition findings by major consideration--transportation[a,b] (continued)

Condition	Davis Canyon	Deaf Smith	Hanford	Richton Dome	Yucca Mountain
MAJOR CONSIDERATION 1: THE SAFETY OF TRANSPORTING SPENT FUEL AND HIGH-LEVEL WASTE TO THE REPOSITORY (Continued)					
Potentially adverse condition 2	P	NP	NP	NP	NP
Terrain between the site and existing local highways and railroads such that steep grades, sharp switchbacks, rivers, lakes, landslides, rock slides, or potential sources of hazard to incoming waste shipments will be encountered along access routes to the site.					
Potentially adverse condition 3	P	NP	NP	NP	NP
Existing local highways and railroads that could require significant reconstruction or upgrading to provide adequate routes to the regional and national transportation system.					
Potentially adverse condition 4	P	NP	NP	NP	P
Any local condition that could cause the transportation-related costs, environmental impacts, or risk to public health and safety from waste transportation operations to be significantly greater than those projected for other comparable siting options.					
MAJOR CONSIDERATION 2: THE AMOUNT AND NATURE OF THE ENVIRONMENTAL DISRUPTION CAUSED BY DEVELOPING THE TRANSPORTATION NETWORK AND ACCESS ROAD (INFRASTRUCTURE) AROUND AND TO THE SITE					
Favorable condition 1	NP	P	P	P	P
Availability of access routes from local existing highways and railroads to the site which have any of the following characteristics:					
(i) Such routes are relatively short and economical to construct as compared to access routes for other comparable siting options.	NP	NP	P	NP	NP
(iii) Cuts, fills, tunnels, or bridges are not required.	NP	NP	P	NP	NP
(iv) Such routes are free of sharp curves or steep grades and are not likely to be affected by landslides or rock slides.	NP	P	P	P	P
(v) Such routes bypass local cities and towns.	NP	P	P	NP	P
Favorable condition 2	NP	NP	P	NP	P
Proximity to local highways and railroads that provide access to regional highways and railroads, and are adequate to serve the repository without significant upgrading or reconstruction.					

8 0 0 0 8 1 0 4 1

Table 7-15. Guideline-condition findings by major consideration--transportation[a,b] (continued)

Condition	Davis Canyon	Deaf Smith	Hanford	Richton Dome	Yucca Mountain
MAJOR CONSIDERATION 2: THE AMOUNT AND NATURE OF THE ENVIRONMENTAL DISRUPTION CAUSED BY DEVELOPING THE TRANSPORTATION NETWORK AND ACCESS ROAD (INFRASTRUCTURE) AROUND AND TO THE SITE (Continued)					
Favorable condition 3	NP	P	P	P	P
Proximity to regional highways, mainline railroads, or inland waterways that provide access to the national transportation system.					
Potentially adverse condition 3	P	NP	NP	NP	NP
Existing local highways and railroads that could require significant reconstruction or upgrading to provide adequate routes to the regional and national transportation system.					
Potentially adverse condition 4	P	NP	NP	NP	P
Any local condition that could cause the transportation-related costs, environmental impacts, or risk to public health and safety from waste transportation operations to be significantly greater than those projected for other comparable siting options.					
MAJOR CONSIDERATION 3: THE COST OF DEVELOPING AN ADEQUATE INFRASTRUCTURE BETWEEN THE SITE AND THE NEAREST NATIONAL TRANSPORTATION NETWORK					
Favorable condition 1	NP	P	P	P	P
Availability of access routes from local existing highways and railroads to the site which have any of the following characteristics:					
(i) Such routes are relatively short and economical to construct as compared to access routes for other comparable siting options.	NP	NP	P	NP	NP
(ii) Federal condemnation is not required to acquire rights-of-way for the access routes.	NP	NP	P	NP	NP
(iii) Cuts, fills, tunnels, or bridges are not required.	NP	NP	P	NP	NP
(iv) Such routes are free of sharp curves or steep grades and are not likely to be affected by landslides or rock slides.	NP	P	P	P	P
(v) Such routes bypass local cities and towns.	NP	P	P	NP	P

8 0 0 0 8 1 1 0 4 2

Table 7-15. Guideline-condition findings by major consideration--transportation[a,b] (continued)

Condition	Davis Canyon	Deaf Smith	Hanford	Richton Dome	Yucca Mountain
MAJOR CONSIDERATION 3: THE COST OF DEVELOPING AN ADEQUATE INFRASTRUCTURE BETWEEN THE SITE AND THE NEAREST NATIONAL TRANSPORTATION NETWORK (Continued)					
Favorable condition 2	NP	NP	P	NP	P
Proximity to local highways and railroads that provide access to regional highways and railroads, and are adequate to serve the repository without significant upgrading or reconstruction.					
Potentially adverse condition 1	P	P	NP	P	P
Access routes to existing local highways and railroads that are expensive to construct relative to comparable siting options.					
Potentially adverse condition 3	P	NP	NP	NP	NP
Existing local highways and railroads that could require significant reconstruction or upgrading to provide adequate routes to the regional and national transportation system.					
Potentially adverse condition 4	P	NP	NP	NP	P
Any local condition that could cause the transportation-related costs, environmental impacts, or risk to public health and safety from waste transportation operations to be significantly greater than those projected for other comparable siting options.					
MAJOR CONSIDERATION 4: THE COSTS ASSOCIATED WITH TRANSPORTING THE SPENT FUEL AND HIGH-LEVEL WASTES TO THE SITE					
Favorable condition 4	NP	NP	NP	NP	P
Availability of a regional railroad system with a minimum number of interchange points at which train crew and equipment changes would be required.					
Favorable condition 5	NP	NP	NP	P	NP
Total projected life-cycle cost and risk for transportation of all wastes designated for the repository site which are significantly lower than those for comparable siting options, considering locations of present and potential sources of waste, interim storage facilities, and other repositories.					
Favorable condition 6	P	P	P	P	P
Availability of regional and local carriers-truck, rail, and waste-which have the capability and are willing to handle waste shipments to the repository.					

Table 7-15. Guideline-condition findings by major consideration--transportation[a,b] (continued)

Condition	Davis Canyon	Deaf Smith	Hanford	Richton Dome	Yucca Mountain
MAJOR CONSIDERATION 4: THE COSTS ASSOCIATED WITH TRANSPORTING THE SPENT FUEL AND HIGH-LEVEL WASTES TO THE SITE (continued)					
Favorable condition 7					
Absence of legal impediment with regard to compliance with Federal regulations for the transportation of waste in or through the affected State and adjoining States.					
Favorable condition 9	P	P	P	P	P
A regional meteorological history indicating that significant transportation disruptions would not be routine seasonal occurrences.					

[a] Key: NA = not applicable; NP = for the purpose of this comparative evaluation, the favorable or potentially adverse condition is not present at the site; P = for the purpose of this comparative evaluation, the favorable or potentially adverse condition is present at the site.

[b] Analyses supporting the entries in this table are presented in Chapter 6 of the environmental assessment for each site.

8 0 0 0 8 1 1 0 4 4

the people living near the site will be most significantly affected, but they also recognize that the hazards and impacts of transporting wastes are national in scope. Because the DOE's main goal in transportation is safety, and the guidelines emphasize the role of safety, transportation safety is the most important consideration in evaluating the sites.

The transportation of radioactive materials during the past 40 years has been accomplished with an exemplary record of safety. Models that are used to estimate the radiological risks of transportation tend to generate extremely low expected-risk values for the public because they rely on historical data. When relative terms like "high" or "moderate" are used in this evaluation, they must be considered in the context of the low overall radiological risk from transportation. The nonradiological risk is calculated under the assumption that the probability of accidents for radioactive-waste shipments can be represented by accident statistics for general commerce. The DOE believes that these accident statistics will overestimate the actual number of deaths and injuries. Other factors being equal, the site with the smallest radiological hazard will also have the smallest nonradiological hazard.

Since the principal contributing factor in determining risk is the distance traveled, a better site for this consideration is one that is close to the sources of spent fuel and high-level waste. Other contributing factors that increase the favorability of sites are access and local routes that avoid population centers, flat local terrain with good visibility, and regional weather conditions that rarely cause hazardous road conditions. It should be noted that, regarding weather conditions, the DOE needs additional information before determining the comparative favorability of the sites. In contrast, less favorable sites are distant from waste sources, must be reached by routes that pass through population centers or rugged terrain, and are located in regions where weather conditions often cause hazardous road conditions. A summary of transportation risk and cost calculations is presented in Table 7-16; the reader is referred to Appendix A for more-extensive analytical results. Table 7-17 presents the factors used to evaluate disruptions of the environment and the cost of infrastructure. A summary of the evaluation for each site follows.

Davis Canyon is centrally located in the large region defined by the five nominated sites, but it is more difficult to reach because of its remote and rugged setting. Access from existing highways and railroads is extremely difficult, and there is a potential for landslides that could interrupt or jeopardize shipments. A long stretch of noninterstate highway must be traversed before reaching the site. From a national perspective, the relative risk of transporting to Davis Canyon is moderate to high, but that risk has to be considered along with the potential hazards near the site that could further reduce the overall level of safety. However, the added risk associated with hazardous local access to the site is somewhat offset by the remoteness of the site and the low population density in the area.

The Deaf Smith site is convenient to major national highways. The distance from sources of spent fuel is low to moderate, and, as shown in Table 7-16, the level of relative safety is therefore moderate to high. The terrain surrounding the site is generally flat and poses no safety hazard. The population density around the site is low to moderate.

8 0 0 0 8 1 0 4 5

Table 7-16. Summary of transportation risks and costs

Parameters	Davis Canyon	Deaf Smith	Hanford	Richton	Yucca Mountain
Risk[a]					
100% truck					
Radiological	9.5	7.9	12	6.3	11
Nonradiological	30	24	39	19	36
100% rail					
Radiological	0.3	0.2	0.3	0.2	0.3
Nonradiological	2.6	2.1	3.2	1.8	3.0
Number of interchanges	3	2-4	2-4	2-4	1-2
Total shipment-miles[b]					
100% truck	145.1	121.4	186.7	96.4	176.8
100% rail	25.5	21.7	33.3	17.7	31.1
Number of interchanges[c]	3	2-4	2-4	2-4	1-2
Cost[d]					
100% truck	1,305	1,127	1,615	936	1,538
100% rail	1,207	1,122	1,376	982	1,345

[a]Number of fatalities during the preclosure period.
[b]One-way million miles.
[c]Within the transportation study area.
[d]Millions of 1985 dollars.

8 0 0 0 8 1 0 4 6

Table 7-17. Factors used to evaluate disruption of the environment and cost of infrastructure

Parameter	Davis Canyon Truck/Rail	Deaf Smith Truck/Rail	Hanford Truck/Rail	Richton Truck/Rail	Yucca Mountain Truck/Rail
Access route					
Miles	25/38-54	1/25-35	<3/<5	4/26	16/100
Cost[a]	79/141-269	1/21-44	<6[b]	3/16	12/151
Upgrade					
Miles	64-68/0	4/0-13	0/0	23/0	0/0
Cost[a]	15-35/0	1/<10	0/0	6/0	0/0
Distance from end of access route to major highway or mainline rail	64-173/30-36	14/0-13	0/48	22/0	0/0
Need for tunnels	Yes	No	No	No	No
Need for bridges	Yes	Yes	No	Yes	Yes
Need for Federal condemnation	Yes	Yes	No	Yes	No
Terrain	Very rugged	Generally flat	Generally flat	Gently rolling	Gently sloping

[a]In millions of 1985 dollars.
[b]Total cost for truck and rail transportation.

8 0 0 0 8 1 0 4 7

Since the Hanford site is the most distant from the large majority of spent-fuel sources, it has the highest relative risk from a national perspective. The introduction of a second repository reduces the effect of distance on the overall transport risk (for a more complete discussion of the effect of a second repository see Appendix A, Section A.11). Transportation safety near the site is considered to be relatively high because of the flat terrain and the good existing transportation network. The population density in the area is moderate.

The Richton site is favorable for the transportation-safety consideration because it is closer to the sources of spent fuel than the other sites. National transportation risks are therefore reduced, and the relative level of transportation safety is high. The site would be more favorable if there were fewer local towns and cities were nearby; however, with the construction and upgrading of the local access routes, local safety should be high as well.

Yucca Mountain is easily accessible, but it is far from most sources of spent fuel. The local rail network that will be developed will effectively bypass Las Vegas. Local roads provide good access to the interstate highway system. One potentially hazardous feature of the access routes is their proximity to an Air Force bombing range. Although this is not expected to present a significant risk, some additional safeguarding of shipments may be required. The local terrain presents no hazards.

Environmental disruption. The second major consideration accounts for the environmental impacts caused by improving the existing infrastructure and constructing new access routes to the site. Though not as important as the first consideration, the potential for environmental disruption has much significance. For example, transportation operations and the development of access routes might adversely affect sensitive species on a large scale (over many miles), and the aesthetic quality of the region may be reduced by the construction of road and rail routes. This consideration reflects the focus in the guideline on local conditions around the site. Effects on the environment along national highways and railroads were considered when those networks were developed for regular commercial traffic. In this respect, the incremental environmental impacts of transporting radioactive waste are not considered to be significant on a national scale.

A contributing factor for this consideration is whether a site requires access routes that would disrupt the environment. Table 7-17 lists the major factors that are considered in evaluating the potential for environmental disruption. A more favorable site would be one that does not require the construction of lengthy access roads. Other qualities that would make a site better are access routes that do not conflict with current land-use plans; no requirements for cuts, fills, tunnels, or bridges; and disruptions that would affect the least number of people. A less favorable site would require significant construction of access routes through pristine or unique environmental areas. Other qualities that reduce the favorability of a site are access routes that conflict with current land-use plans; a requirement for many cuts, fills, tunnels, and bridges; and the displacement of many people by the access route. A summary of the evaluation for each site follows.

Major construction of highways and railroads would be required to reach the Davis Canyon site. This new construction would disrupt previously

8 0 0 0 8 1 0 4 8

undisturbed land and diminish the aesthetic quality of the area. The construction of access routes would require major cuts and fills as well as tunnels. The existing transportation network would also have to be improved.

Deaf Smith County is located on generally flat terrain that would not require major excavation during construction. Upgrading of the existing road is not expected to cause significant environmental impacts. A long segment of new track must be laid to reach the site, but the environmental disruptions would be minor.

For the Hanford site, the truck and rail access routes would be short, and little environmental disruption would result from constructing the access routes. No improvement in the existing transportation network is needed.

The Richton site is on generally flat terrain. Although a long railspur would have to be built to reach the site, it would follow an abandoned railroad right-of-way. The existing local road would have to upgraded for a significant length. A short length of new road would have to be built to reach the site. The environmental impacts of new construction are not expected to be significant.

To reach the Yucca Mountain site, a long railspur and a moderate length of new road would have to be constructed. A long bridge would also be necessary. The terrain is such that the construction of these routes will cause minimal environmental disruption.

Cost of transportation infrastructure. This major consideration addresses the cost of constructing and upgrading the access routes to the sites. Its importance is gained from the emphasis in the qualifying condition on the local infrastructure and access routes. It is not as important as the first consideration because the protection of health and safety is more important than reducing costs.

The cost of the transportation infrastructure is considered separately from the costs of transporting waste to the site. Table 7-17 presents a comparison of costs for the construction of new road and rail access routes and the upgrading of existing networks at each site.

A favorable site for this consideration is one that needs little, if any, repair or upgrading of access routes. Other qualities of a favorable site include no requirement for Federal condemnation for rights-of-ways, a flat terrain, low costs for rights-of-way, and absence of other local anomalous features that may increase costs. A less favorable site has a poorly maintained or no transportation infrastructure; if it does exist, it is a long distance from the site, thus requiring much new construction. Other qualities of a less favorable site are a mountainous terrain, high costs for rights-of-way, the need to secure rights-of-way by Federal condemnation, and other features that could require expensive mitigation.

Cost of transportation hardware and operations. The least important consideration is the cost of developing the cask fleet and shipping the waste to the repository. This consideration is not as important as the others because transportation costs are relatively insensitive to location, and the protection of health and safety is more important than reducing costs.

8 0 0 0 8 1 0 4 9

The cost of transporting spent fuel to the repository sites depends to some extent on distance; that is, it costs about as much to ship waste 1,000 miles as it does 500 miles. Other factors that can influence cost, at least as determined at this stage of investigation, provide little additional guidance for discriminating among sites. A summary of transportation costs is presented in Table 7-16.

Like transportation safety, transportation cost is also affected by decisions about the configuration of the waste-management system, such as the second repository. The effect of the second repository is considered as quantitatively as possible.

A favorable site is one that is close to the sources of waste, is not subject to weather that will interfere with access to the repository, is served by existing carriers, is located in an area with emergency-response capabilities, is not located near communities that impose legal impediments to transport, and is served by rail routes that require few crew changes. A less-favorable site has characteristics that are the converse of the above factors.

Summary of comparative evaluations

The Richton site is the leading site for the major considerations that address transportation safety and the cost of transportation hardware and operations; it is the second most favorable site with respect to environmental disruption and the cost of the infrastructure. Because of the paramount importance assigned to transportation safety, the Richton site is the most favorable. The Deaf Smith site is distinguished from Richton mainly by being farther from the sources of the waste. The Hanford site is less favorable from a nationwide transportation perspective because it is the farthest from the sources of the waste. Local conditions at Hanford, however, are highly favorable in terms of safety, cost, and environmental disruption. Yucca Mountain, which is about equal in favorability to Hanford, is far from the sources of waste and would require major construction of access routes. Davis Canyon is the least favorable site for this guideline. Although it is moderately far from the sources of the waste, it is not readily accessible because the terrain in the area is very rugged. Moreover, major construction of highways and railroads is required, and it would cause significant environmental impacts.

7.3.2.2 System guideline on environment, socioeconomics, and transportation

Ranked second in importance in the preclosure system guidelines is environment, socioeconomics, and transportation. The pertinent system elements for environment, socioeconomics, and transportation (10 CFR 960.5-1(a)(2)) will, in general, consist of (1) the people who may be affected, including their lifestyles, sources of income, social and aesthetic values, and community services; (2) the air, land, water, plants, animals, and cultural resources in the areas potentially affected by such activities; (3) the transportation infrastructure; and (4) the potential mitigating measures that can be used to achieve compliance with this guideline. To provide a comparative context for understanding the evaluation of this system guideline

8 0 0 0 8 1 1 0 5 0

in Chapter 6, this section presents a brief summary of the evaluation of each site in terms of the system elements.

At Davis Canyon, the level of suspended particulates and gaseous emissions will increase during repository construction and operation. However, the concentrations of total suspended particulates (TSP) and nitrogen dioxide during all phases would be below the national ambient air quality standards (40 CFR Part 50). Construction lighting may have an effect on skyglow in the vicinity of the site. Repository construction and operation would increase the levels of noise, which may be heard in the Canyonlands National Park. It is expected that direct impacts on cultural resources during siting and construction can be minimized. Indirect impacts would not result in a loss of significant amounts of cultural information.

The site would not intrude on nearby dedicated lands. Transportation access to the Newspaper Rock State Historical Monument and the Canyonlands National Park would be temporarily disrupted. No unique aquatic or terrestrial habitat is likely to be significantly affected by the repository. The overall visual impacts of the repository would not be significant away from the immediate vicinity of the repository, except along Utah 211 and from the Davis Canyon Jeep Trail. The surface facilities would not be visible from any scenic view points or key observation points in Canyonlands National Park. A repository in Davis Canyon would, however, cause a significant adverse visual impact as viewed from the upper reaches of Davis Canyon in the park. Each of the four alternative rail corridors would create significant visual-contrast impacts from two to three key observation points in the area; none of these is inside the park.

Cumulative impacts on the Canyonlands National Park include shared traffic on Utah 211 (during site characterization), increased particulates and noise at the edge of the park, visibility of the site from Davis Canyon at the park boundary, sky brightness at night, and the potential of nearby industrial development. The impact of episodic noise intrusion on solitude in the park would be significant, but of short duration. During repository operations, all impacts mentioned above will be eliminated or reduced in the sections of the park designated for scenic, cultural, or solitude enjoyment purposes.

At Davis Canyon, available labor supplies within commuting distance of the site are expected to be insufficient to meet the requirements of the repository. The projected number of persons (workers and families) expected to in-migrate into the area during peak employment is significant. This would result in significant population increases in the rural communities of Monticello, Blanding, and Moab.

The population increase would require additional community services and facilities. The need for expanded community services and facilities could result in financial burdens to host communities because increased revenues from project and worker expenditures may not immediately be available to finance these capital expenditures. The increased demand for labor could reduce local unemployment but also cause competition and decreases in the labor available for other sectors of the economy. Advance community-development planning and financial and technical assistance can lessen the impacts on affected communities. Increased tax revenues and business activity would contribute to mitigation in the long term. Significant population

8 0 0 0 8 1 0 5 1

increases would also cause social changes within communities. Planning for additional protective, social, and cultural services can mitigate these changes.

Some temporary disruption in the existing vehicle-traffic flow can be expected, and some localized inconveniences experienced, during the construction of new transportation corridors and the upgrading of others. Depending on the alternative road and railroad routes selected for the repository and the time of year, some threatened and endangered species or their preferred habitats may be affected. The radiological risks of transportation appear to be small. Estimates indicate that the maximally exposed individual could receive up to 3 percent of the doses delivered by natural background radiation. It may be possible to provide new highway and rail routes that will not disrupt local cities and towns.

At the Deaf Smith site, the local areas would sustain increases in suspended particulates and nitrogen oxide emissions, particularly during site clearing and construction. Mitigation measures would limit any significant increases of suspended particulates to the immediate vicinity of the site. Preliminary modeling results indicate air quality can be maintained within regulatory standards. Short-term increases in sound levels will occur in areas around drilling sites and near truck-mounted generators during the site characterization. At the nearest residences, noise during some stages of construction could exceed EPA guidelines. Practical engineering measures can be used to prevent runoff and ground-water contamination from the salt pile at the site. Salt-handling and control measures would be used to minimize the deposition of wind-blown salt on adjacent lands.

The site is in an agricultural area that is heavily dependent on irrigation. While the repository would represent a water demand on a limited resource, the demand is less than that required to irrigate an equivalent area. Repository development will divert 5,760 acres from potential agricultural uses. The withdrawal of this land represents less than 1 percent of the total prime farmland in the county. Neither the site nor potential transportation corridors would intrude on any dedicated resource areas. No unique aquatic or terrestrial species are likely to be affected. Structures and equipment at the site during siting and construction would be visible but not visually atypical of the region. Depending on the distance, the visual intrusion will range from moderate to high.

At the Deaf Smith site, employment predictions indicate that the available labor supply within commuting distance to the site would not be sufficient to satisfy repository labor requirements, particularly during the peak employment periods. Some in-migration of workers is therefore likely. The area seems able to absorb the projected population changes without significant disruptions in housing and other community services. However, some increases in the demand for community services can be expected. Increased tax revenues and mitigation grants from the DOE will assist in providing required additional services.

There are several feasible highway and railroad access routes to the Deaf Smith site that do not irreconcilably conflict with Federally protected resource areas. These routes can be designed and constructed with available technology and will not require waste-transportation packaging standards more

stringent than existing NRC and DOT regulations, nor the development of new transportation casks. A preliminary evaluation of operations over representative highways and railroads to the Deaf Smith site indicates that waste-transportation operations can be conducted over these routes without unacceptable risk to the public or impacts on the environment. Also, adequate protection for the public and the environment can be provided during both the construction of the access routes and during operation over those routes.

For the Hanford site, no adverse environmental impacts have been identified that cannot be mitigated. The site is not within any protected resource areas, and compliance with regulatory requirements should not be a problem. No federally recognized threatened or endangered species are known to use the site as a critical habitat. There are significant native American resources on the Hanford Site, but they are far enough from the repository location so that there would be no significant adverse impacts.

Projected employment and population growth associated with the repository could be readily assimilated by the area. A technically qualified work force (except for miners) is located in the Tri-Cities and surrounding area. Roads, schools, utilities, and housing are all expected to have the ability to accept additional people in the area without stress on community services and facilities.

Access routes to the site would have no undesirable features that would require unique design or construction methods or special features of transportation system components, including the transportation packaging. Risks to public health and safety of proposed access routes would be acceptably low, since these routes are short and pass through areas without population. The environmental impacts of transportation are expected to be acceptably low, since the access routes are short and do not pass through protected resource areas. Projected risks, costs, and other impacts of waste transportation have been considered in repository siting, and transportation operations would be conducted in compliance with applicable regulation.

At the Richton site, the residual air-quality impacts are acceptable because they are below secondary standards. Clearing and construction activities would increase ambient noise levels near the site. Engineering design and distance to the nearest residences in the area will mitigate these noise levels to acceptable levels.

The construction of shafts to the underground facility would require the penetration of aquifers. Engineering safeguards to prevent threats to this water source are a recognized necessity. Existing technology is adequate to provide the needed protection.

Engineering measures can be used to prevent runoff and ground-water contamination from the salt pile at the site. Salt handling and control measures would be used to minimize the deposition of wind-blown salt. No known cultural resources will be affected by project activities.

The site would not intrude on any dedicated land or recreational areas. Any potential transportation rights-of-way that may be required through land under the National Forest System would be sited on existing or abandoned rights-of-way, thus minimizing land disruption.

No unique aquatic or terrestrial species are likely to be significantly affected. The surface facilities will be visible to some areas in the vicinity of the site. However, the emplacement is not likely to affect any existing unique features of the area.

At the Richton site, Employment predictions indicate that the available labor supply within commuting distances to the site will not be sufficient to satisfy repository labor requirements, particularly during peak employment. Some in-migration will therefore occur. Job-training programs can provide opportunities of employment for area residents, thus decreasing in-migration. The area seems capable of absorbing the projected population change without significant disruptions in housing and other community services. However, some increased demand for community services can be expected. Increased tax revenues will be received by State and local government. The town of Richton will experience impacts. This population increase would require expanded community services and facilities and may cause social changes in the town of Richton. Advanced community-development planning can lessen these impacts.

Some temporary disruption in existing vehicular traffic flow can be expected, and some localized inconvenience may be experienced during the construction of new transportation corridors and upgrading of others. The radiological risks of waste transportation appear to be small. Estimates indicate that the maximally exposed individual could receive up to 5 percent of the dose delivered by normal background radiation. Needed new highway and rail routes can be provided without disruption to local cities and towns.

At Yucca Mountain, the potentially significant adverse environmental impacts include (1) the destruction of approximately (1,608 acres) of desert habitat; (2) fugitive-dust emissions from surface preparation, excavation, and manipulation of spoils piles; (3) vehicle emissions from waste transport, personnel transport, and materials transport and the operation of construction equipment; and (4) radioactive-material releases during (a) repository excavation (e.g., from naturally occurring radon), (b) normal repository operation, and (c) accidents. Potential impacts on surface and ground water are considered insignificant, chiefly because there is no perennial surface water in the area, and ground water is several hundred meters beneath the repository horizon. A permanent land withdrawal would be required if the Yucca Mountain site is selected for repository development, and the reservation of water rights is explicit in such an action. Studies to date suggest that aquifers underlying the proposed locations of the surface facilities can produce large quantities of water for long periods without lowering the regional ground-water table. Other potential impacts, such as the diversion of natural runoff and the leaching of materials from excavated rock, are being considered in the repository design, and they are not expected to pose significant environmental problems.

During repository construction, the maximum estimated ambient concentrations of particulates, carbon monoxide, and the oxides of sulfur and nitrogen are not expected to exceed the air-quality limits of 40 CFR Part 50 (1983). Assuming the repository is subject to the "prevention of significant deterioration" provisions of the Clean Air Act Amendments of 1977, the predicted pollutant concentrations would violate none of the applicable standards.

8 0 0 0 8 1 0 5 4

Negative impacts on community services, housing supply and demand, and the finances of State and local government agencies in the affected area are not expected to be significant for repository siting, construction, operations, and decommissioning at Yucca Mountain.

The affected area, including the Las Vegas Valley, has the ability to absorb the repository-related population changes without significant disruptions of community services and without significant impacts on housing supply and demand.

Although community-specific service and housing demands could increase at rates proportional to the maximum 1-year community-population-growth rates estimated with the repository, these rates are generally within the range of those experienced historically by the urban communities and their municipal service providers. Because the unincorporated towns nearest the Yucca Mountain site have limited capability for community services, the potential population growth in these communities would generally impact county-wide service providers. These service providers are more likely to have resources for managing growth. In addition, the community-level growth rates estimated for the unincorporated towns are generally within the range of those experienced historically by Nye and Clark Counties. The work force in southern Nevada is sufficiently large to site, construct, and operate a repository at Yucca Mountain. Although an adequate total work force may be available for a repository at Yucca Mountain, the available work force with mining skills would be inadequate, and the available construction work force may also be inadequate. A repository at Yucca Mountain would increase employment and business sales in southern Nevada. Community services and government revenues are likely to increase.

For rail access to Yucca Mountain, a rail line extending approximately 100 miles from the existing mainline rail facilities at Dike Siding has been proposed. This route would be entirely on lands administered by the DOE and the U.S. Department of the Air Force and public-domain lands under the jurisdiction of the Bureau of Land Management. The terrain over which the rail line would cross is gently sloping. No tunnels and only a minor amount of excavation and fill would be required. A bridge would be required at Fortymile Wash several miles east of Yucca Mountain.

For highway access to the proposed site, a route is projected northward from U.S. Highway 95, originating approximately 0.5 mile west of the intersection of U.S. Highway 95 and Nevada State Route 373. The roadway access would be constructed on federally controlled lands that slope gently and would pose no significant engineering problems. No tunnels and only a minor amount of excavation would be required. Some minor drainage control measures and a bridge spanning Fortymile Wash would be required. The bridge would accommodate both the railroad and trucks. Between Las vegas and Mercury U.S. Highway 95 is a four-lane divided highway; it is a two-lane highway from Mercury to the access road near the intersection of U.S. Highway 95 and Nevada State Route 373. A requirement for significant upgrading of this regional highway is unlikely.

The evidence does not support a finding that any of the sites is not likely to meet the qualifying condition for environment, socioeconomic, and transportation.

7.3.3 EASE AND COST OF SITING, CONSTRUCTION, OPERATION, AND CLOSURE

7.3.3.1 Technical guidelines

The four technical guidelines in this group address the surface characteristics of the site, the characteristics of the host rock and the surrounding strata, hydrologic conditions, and tectonics. These guidelines are concerned with the ease and cost of siting, constructing, operating, and closing the repository.

7.3.3.1.1 Surface characteristics

The qualifying condition for surface characteristics is as follows:

> The site shall be located such that, considering the surface characteristics and conditions of the site and surrounding area, including surface-water systems and the terrain, the requirements specified in §960.5-1(a)(3) can be met during repository siting, construction, operation, and closure.

Major Considerations

On the basis of the qualifying, favorable, and potentially adverse conditions for this guideline (see Table 7-18), there are two major considerations that influence the favorability of the sites with respect to the qualifying condition. These major considerations, in order of decreasing importance, are (1) the potential for flooding the surface or underground facilities and (2) the characteristics of the terrain.

Evaluation of sites in terms of the major considerations

Potential for flooding surface or underground facilities.

This consideration is derived from the potentially adverse condition. It is important because the effects of flooding can be significant design considerations for cost and safety. The potential for, and the frequency of, flooding depend on the terrain and drainage of a site. Contributing factors are the location and likelihood of flooding from natural causes at the surface or underground facilities, the failure of man made surface-water impoundments, and the failure of engineered components of the repository. A summary of the evaluation for each site follows.

At the Davis Canyon site, a portion of the repository operations area lies within the flood plains of the 100-year and the probable maximum flood. There are no surface-water impoundments whose failure could flood the surface facilities, and there are no known surface characteristics that could cause the failure of engineered repository components. The potential for flooding would be reduced by using fill to elevate the site and constructing a lined flood-control channel.

Parts of the Deaf Smith site lie in the flood plains of the 500-year and the probable maximum flood, but no safety-related facilities would be

8 0 0 0 8 1 0 5 6

Table 7-15. Guideline-condition findings by major consideration--surface characteristics[a,b]

Condition	Davis Canyon	Deaf Smith	Hanford	Richton Dome	Yucca Mountain
MAJOR CONSIDERATION 1: POTENTIAL FOR FLOODING OF SURFACE OR UNDERGROUND FACILITIES					
Potentially adverse condition					
Surface characteristics that could lead to the flooding of surface or underground facilities by the occupancy and modification of flood plains, the failure of existing or planned man-made surface-water impoundments, or the failure of engineered components of the repository.	P	P	P	P	P
MAJOR CONSIDERATION 2: TERRAIN CHARACTERISTICS					
Favorable condition 1					
Generally flat terrain.	NP	P	P	P	P
Favorable condition 2					
Generally well-drained terrain.	P	P	P	P	P

[a] Key: NA = not applicable; NP = for the purpose of this comparative evaluation, the favorable or potentially adverse condition is not present at the site; P = for the purpose of this comparative evaluation, the favorable or potentially adverse condition is present at the site.
[b] Analyses supporting the entries in this table are presented in Chapter 6 of the environmental assessment for each site.

8 0 0 0 8 1 0 5 7

threatened by either flood. There are no surface-water impoundments that could flood the surface facility, and surface characteristics should not lead to failures of engineered repository components. Any effects of potential flooding would be mitigated by filling during construction.

The elevation of the Hanford site protects it from the probable maximum flood of the Columbia and Yakima Rivers, including both natural flooding and dam-breached floods. A shallow probable maximum flood could occur in the southwestern portion of the site along the drainage channel of the intermittent Cold Creek. The duration of such a flood would be short, and its effects could be mitigated to preclude any danger to the workers or to the surface and subsurface facilities.

During an estimated probable maximum flood at the Richton site, the head waters of the Fox Branch river could flood the area proposed for surface facilities. There are no existing or planned man-made surface-water impoundments in the vicinity of the Dome. It is assumed that Fox Branch would be diverted and channeled around the surface facilities and that grading and fill operations would raise the elevation of the site area above the flood plain.

At the Yucca Mountain site, the exploratory shaft would be located in a wash within a flood plain that would be affected by sheet and debris flow. Parts of the candidate locations are in an area that would be affected by the 500-year and the regional maximum floods. There are no existing or planned man-made surface-water impoundments near the site that could flood the surface facilities. Some engineering measures would be required to mitigate the impacts of the probable maximum flood. The hazards of sheet and debris flow at the exploratory shafts could be mitigated by measures like channel lining or diversion.

Terrain characteristics. This consideration addresses the effects of the terrain and drainage characteristics of a site on repository construction, operation, and closure. This consideration is derived from the first and second favorable conditions. It is less important than the first consideration because the characteristics of the terrain are more closely related to the ease and cost of construction than to safety and can generally be mitigated more readily than conditions that could cause flooding.

The contributing factors for this major consideration are the terrain and drainage characteristics of the site, the potential for landslides, and soil characteristics. A summary of the evaluation for each site follows.

The area around the Davis Canyon site is characterized by steep canyons and rugged terrain. Though the terrain at the surface facilities is quite flat, the terrain through which the access roads and railroad would be constructed is rugged. Existing drainage would be rechanneled around the surface facilities during construction. Soils are likely to be well drained, with low water retention since their parent materials are mainly sandstones and siltstones.

The surface of the Deaf Smith site is nearly flat, sloping eastward less than 1 percent. Topographic features include small, internally drained lake basins (playas) and narrow stream valleys that carry surface water after

.instorms. Soils appear to be acceptable for a large grading operation .ring repository construction.

The Hanford site is surrounded by an area of generally flat terrain for a .dius of nearly a mile. The lack of surface-runoff features suggests the ·latively coarse surficial sediments are effective in keeping the surface :ll drained and preventing surface-runoff features from developing north and .st of the Cold Creek flood plain.

The Richton site is surrounded by generally flat terrain, with slopes of to 4 percent and locally up to 10 percent. The soils are generally well ·ained, though small temporary ponds and marshy areas may form in the area mediately after a heavy rainfall. Soils appear to be acceptable for large ·ading operations during repository construction.

At Yucca Mountain, potential locations for the surface facilities are on ıe eastern side of the mountain. All are generally flat and covered with .luvium derived from adjacent highlands. The surface slope at these ıcations is less than 5 percent and in several places less than 3 percent. ıe exploratory-shaft facilities would be built within a wash that is partly ırrounded by rugged terrain. Yucca Mountain has a well-established drainage 'stem because of its porous alluvial soils and eastward-dipping slopes.

ummary of comparative evaluation

The most favorable site is Deaf Smith where only small parts of the site ıuld be affected by the probable maximum flood. At Hanford, which is .ightly less favorable, the probable maximum flood may reach portions of the ırface facilities. Both the Deaf Smith and the Hanford sites have flat ·rrain that is generally well drained.

The Richton and the Yucca Mountain sites are somewhat less favorable than ıaf Smith and Hanford. At Richton site, the surface facilities would be ıcated in the flood plain of the probable maximum flood, but the potential ır flooding could be reduced by diverting the Fox Branch stream. Ponds may ırm after a heavy rainfall because the site is on flat terrain that is not :ll drained. At Yucca Mountain the exploratory-shaft facilities would be in wash that is subject to sheet-and-debris flow and surrounded by rugged ·rrain. Parts of the candidate locations for the surface facilities may be .thin the flood plains of the 500-year and regional maximum floods. Although ıe surface facilities would be built on flat terrain, the site is well :ained.

The Davis Canyon site is the least favorable for this guideline. The ırface facilities at Davis Canyon would be within a 100-year flood plain, and ıe area is surrounded by steep canyons and rugged terrain. More-extensive ıgineering measures, such as channeling and drainage diversion, would be ·cessary to mitigate the impacts of a 100-year flood.

7.3.3.1.2 Rock characteristics (preclosure)

The qualifying condition for preclosure rock characteristics is as follows:

> The site shall be located such that (1) the thickness and lateral extent and the characteristics and composition of the host rock will be suitable for accommodation of the underground facility; (2) repository construction, operation, and closure will not cause undue hazard to personnel; and (3) the requirements specified in Section 960.5-1(a)(3) can be met.

Major considerations

On the basis of the qualifying, favorable, and potentially adverse conditions for this guideline (see Table 7-19), there are three major considerations that influence the favorability of sites with respect to the qualifying condition. In order of decreasing importance these considerations, are (1) in situ conditions that could lead to safety hazards or difficulties during repository siting, construction, operation, and closure; (2) in situ conditions that could require engineering measures beyond reasonably available technology in the construction of the shafts and the underground facility, and (3) flexibility in selecting the location and configuration of the underground facility.

Evaluation of sites with respect to major considerations

Safety hazards and difficulties. This consideration includes in situ conditions that could lead to safety hazards or difficulties during repository siting, construction, operation, and closure. It is related to the qualifying condition through concern about safety hazards to workers and the costs and technical feasibility of mitigating difficult conditions and safety hazards. It is derived from the second favorable condition and the third, fourth, and fifth potentially adverse conditions. Because of its concern with the safety of workers, this is the most important of the considerations related to this guideline. A summary of the evaluation for each site follows.

At Davis Canyon, the mechanical properties of the salt are such that no significant safety hazards from rock instability are expected. A significant safety hazard is the potential for the presence of combustible gas. Although there is no direct evidence that such gas is present at the site, experience in salt mines at other locations suggests that it may occur. The hazards from gas can be mitigated by following safety procedures and providing adequate ventilation. The requirements for artificial rock support are expected to be relatively minor (only occasional bolting) because of the apparent massiveness of the salt and the lack of nonsalt interbeds in the host rock. Also, the presence of any carnallite in the salt should not require increased artificial support since no differences in rock strength have been observed between Paradox Basin salt and carnallite during preliminary testing. However, maintenance of underground openings may be required because of salt creep at

8 0 0 0 8 1 0 6 0

Table 7-19. Guideline-condition findings by major consideration--rock characteristics (preclosure)[a,b]

Condition	Davis Canyon	Deaf Smith	Hanford	Richton Dome	Yucca Mountain
MAJOR CONSIDERATION 1: SAFETY HAZARDS OR DIFFICULTIES DURING REPOSITORY SITING, CONSTRUCTION, OPERATION AND CLOSURE, INCLUDING RETRIEVAL					
Favorable condition 2					
A host rock with characteristics that would require minimal or no artificial support for underground openings to ensure safe repository construction, operation and closure.	NP	NP	NP	NP	P
Potentially adverse condition 3					
Geochemical properties that could necessitate extensive maintenance of the underground openings during repository operation and closure.	P	P	NP	P	NP
Potentially adverse condition 4					
Potential for such phenomena as thermally induced fracturing, the hydration and dehydration of mineral components, or other physical, chemical or radiation-related phenomena that could lead to safety hazards or difficulty in retrieval during repository operation.	P	P	P	P	NP
Potentially adverse condition 5					
Existing faults, shear zones, pressurized brine pockets, dissolution effects, or other stratigraphic or structural features that could compromise the safety of repository personnel because of water inflow or construction problems.	P	P	P	P	NP
MAJOR CONSIDERATION 2: ENGINEERING MEASURES BEYOND REASONABLY AVAILABLE TECHNOLOGY					
Potentially adverse condition 2					
In situ characteristics and conditions that could require engineering measures beyond reasonably available technology in the construction of the shafts and underground facility.	NP	NP	NP	NP	NP
MAJOR CONSIDERATION 3: FLEXIBILITY IN LOCATING THE REPOSITORY WITHIN THE HOST ROCK					
Favorable condition 1					
A host rock that is sufficiently thick and laterally extensive to allow significant flexibility in selecting the depth, configuration and location of the underground facility.	P	NP	P	P	NP

Table 7-19. Guideline-condition findings by major consideration--rock characteristics (preclosure)[a,b] (continued)

Condition	Davis Canyon	Deaf Smith	Hanford	Richton Dome	Yucca Mountain
MAJOR CONSIDERATION 3: FLEXIBILITY IN LOCATING THE REPOSITORY WITHIN THE HOST ROCK (Continued)					
Potentially adverse condition 1					
A host rock that is suitable for repository construction, operation and closure, but is so thin or laterally restricted that little flexibility is available for selecting the depth, configuration, or location of an underground facility.	NP	P	NP	NP	P

[a] Key: NA = not applicable; NP = for the purpose of this comparative evaluation, the favorable or potentially adverse condition is <u>not</u> present at the site; P = for the purpose of this comparative evaluation, the favorable or potentially adverse condition is present at the site.

[b] Analyses supporting the entries in this table are presented in Chapter 6 of the environmental assessment for each site.

8 0 0 0 8 1 0 6 2

the candidate horizon. Salt creep will gradually reduce the size of underground openings, and, if significant, may require reexcavation to maintain minimum required dimensions. Salt creep could be a major factor if the waste needs to be retrieved, because it could cause difficulties in maintaining room stability and emplacement holes. However, available information indicates that the salt at Davis Canyon should have a relatively low rate of creep during the duration of the preclosure period.

At the Deaf Smith site, possible safety hazards are the potential for mine-roof instabilities, water inflow down the shaft from aquifers above the repository, and the presence of combustible gas. Interbeds in the salt above the underground openings may cause mine-roof instabilities. Rock falls can be prevented by adequate artificial supports. Water inflow from overlying aquifers can readily be prevented through ground-treatment and shaft-sealing techniques. Although there is no direct evidence that combustible gas is present at the site, experience in salt mines at other locations suggests that it may occur. The hazards from such gas can be mitigated by following safety procedures and providing adequate ventilation. The only artificial rock support required at the site is expected to be regular rock bolting, which will be needed to minimize mine-roof instabilities caused by interbeds in the roof. As at Davis Canyon, maintenance of underground openings may be required because of salt creep. Available information indicates that the salt at the Deaf Smith site would creep at a moderate rate during the duration of the preclosure period.

The safety hazards at the Hanford site are the potential for rock instabilities, large water inflows, high temperatures in the underground facility, and the presence of combustible gas. The high-stress conditions and high rock strength of the basalt suggest a possibility for rock bursts or other hazardous rock movements. However, preliminary evaluations indicate that such bursts are not likely to occur because of the closely jointed nature of the dense interiors, low extraction ratios, and the installation of rock-support systems. Regularly spaced rock bolting and shotcrete over wire mesh would probably be used at Hanford to support the underground excavations, but the extent of needed artificial supports is uncertain because of a lack of experience under similar conditions and a lack of understanding of the impact of thermally induced stress in the emplacement rooms. The high underground temperatures are not expected to cause a significant deterioration of support or instability of the rock. The basalt should not creep significantly, but maintenance, which is typical of deep hard-rock excavations, will probably be required. The potential for large water inflows can be reduced by probing with exploratory boreholes and mitigated through ground treatment and other methods. Combustible gas may be present as it comes out of solution from the ground water. Although the expected quantity of gas is uncertain, the hazards from the gas can be mitigated by following safety procedures and providing adequate ventilation. High temperatures (120°F) in the host rock also pose a potential hazard to workers, but this hazard can be mitigated by providing ventilation, protective clothing, and artificial cooling. There is a potential for minor difficulties in waste retrieval if the emplacement holes do not remain stable during the retrieval period.

At the Richton site, the mechanical properties of the salt are such that no significant safety hazards from rock instability are expected. A possible safety hazard is the potential presence of combustible gas. Although there is no direct evidence that gases are present, experience in salt mines at other locations indicates that it may occur. Hazards from gas can be mitigated by following safety procedures and providing adequate ventilation. On the basis of experience with artificial support in salt mines in the Gulf Coast region, the artificial support required at the Richton Dome is expected to be widely spaced rock bolting. As with the other salt sites, significant maintenance of underground openings may be required because of salt creep. However, the magnitude of creep over long time periods is highly uncertain at the Richton Dome, as it is at the other sites. Available information indicates that salt at the Richton Dome would undergo a moderate rate of preclosure creep.

At Yucca Mountain, safety hazards are limited to the potential for rock falls. The rock strength of welded tuff and in situ stresses are favorable. However, the fractured nature of the tuff could cause rock falls in underground openings. Faults encountered in the underground facility may also contribute to local instabilities because of the poor quality of rock associated with brecciated fault zones. The potential for rock falls can be mitigated through the use of appropriate artificial supports for the underground openings. On the basis of previous excavation at the Nevada Test Site, the expected artificial support requirements at Yucca Mountain are regularly spaced rock bolts with steel mesh covering the rock surface. Occasional supplemental bolting or shotcrete may be required in areas of poor-quality rock, but these requirements are minimal compared with the ground support needed in similar underground construction projects. Since the tuff does not creep, little deterioration of the rock and the artificial support is expected because of time and temperature changes. Fractures in the tuff could complicate retrieval, especially if waste is emplaced in long horizontal holes. Such difficulties could be avoided by providing liners for the emplacement holes.

Complexity of engineering measures. This consideration includes in situ characteristics and conditions that could require engineering measures beyond reasonably available technology in the construction of shafts and underground facilities. The complexity of engineering measures relates directly to the concern in the qualifying condition with technical feasibility. This consideration is derived from the second potentially adverse condition. Although the success of repository construction depends on its technical feasibility, the complexity of engineering measures is second in importance to the safety of personnel. A summary of the evaluation for each site follows.

At Davis Canyon, the construction of the shafts and underground facility is not expected to require engineering measures beyond existing technology. Shaft sinking, underground excavation, artificial support, and protection against any preemplacement safety hazards (such as gas or brine pockets) can be accomplished with technology that has been developed in the salt-mining industry.

At the Deaf Smith site, the shafts and underground facility would also be constructed with technology developed in the salt-mining industry. However, because the Ogallala aquifer lies above the repository at this site, stabilizing the ground for shaft sinking and providing effective water seals for the shaft liner would be more difficult. In addition, the presence of interbeds at the repository horizon would require additional artificial support in the underground facility.

Although the technology required to construct the underground facility at the Hanford site is reasonably available, constructing the repository shafts by blind hole drilling is at the limit of available technology. The shaft would be drilled in an environment that involves a difficult combination of depth, rock conditions, ground-water conditions, and stress conditions. Because shaft drilling in equivalent environments has not been attempted, a reliable data base is not available. Potential ground-water inflows, gases, and high rock temperatures can be managed with available technology, but the combination of conditions could require engineering measures that are more extensive than that usually required in underground construction.

At the Richton site, the shafts and the underground facility can also be constructed with technology developed in the salt-mining industry. A number of salt mines have operated in the Gulf Coast region, and the expected conditions (and the technology to handle those conditions) are relatively well known.

At Yucca Mountain, the construction of the shafts and the underground facility would not require engineering measures beyond existing technology. Construction experience at the G-tunnel on the Nevada Test Site and in other excavations in tuff, coupled with the unsaturated-tuff conditions, indicate that construction at Yucca Mountain should require proved engineering techniques.

Flexibility. Flexibility in selecting the depth, configuration, and location of the underground facility is related to the thickness and the lateral extent of the host rock--the concern of the qualifying condition. Derived from the first favorable condition and the first potentially adverse condition, this consideration is judged to be less important than worker safety and technical feasibility. A summary of the evaluation for each site follows.

At Davis Canyon, the host salt bed is expected to offer significant flexibility in locating the repository. Its thickness appears to be several times greater than necessary, and the available host rock appears to extend laterally for many kilometers. It also appears that there are no significant interbeds, impurities, or other stratigraphic or structural features within the salt bed that would limit this flexibility. However, this evaluation is based on a limited database for the site.

At the Deaf Smith site, flexibility is limited by the expected presence of interbeds in the host salt bed. Although the host salt bed is relatively

00008 1065

thick, the interbeds in the salt restrict the vertical flexibility for locating the repository. In contrast, there is extensive lateral flexibility because the host rock appears to extend for many kilometers. This evaluation is based on geologic information obtained from boreholes near the site.

The Hanford site appears to offer restricted vertical but significant horizontal flexibility. The thickness of other basalt flows in the area varies significantly over short distances, and the predictability of the host-rock thickness at Hanford is uncertain because of a limited data base.

The host salt at the Richton site appears to offer significant flexibility. Flexibility is greatest in the vertical direction, with the salt dome extending for thousands of meters, but there is some lateral flexibility as well. Although the shape of the dome is relatively well known from boreholes and geophysical surveys, there is a potential for undetected and unfavorable internal structures in the dome that could limit flexibility.

There appears to be significant vertical flexibility to locate a repository at Yucca Mountain, but lateral flexibility may be limited by minor faults, a shallow overburden, or site anomalies. The lateral extent of homogeneous host rock outside the primary repository area has not been established.

Summary of comparative evaluations

Since Yucca Mountain is the most favorable site for the two most important considerations, it is the most favorable site for the preclosure guideline on rock characteristics. Yucca Mountain is expected to have the fewest safety hazards, and it would require only existing construction technology and minimal artificial support and maintenance. The limited host-rock flexibility does not outweigh the favorability of the other considerations.

Davis Canyon is relatively favorable for all the major considerations, but it is less favorable than Yucca Mountain. Although there is some potential for safety hazards and retrieval difficulties, and some maintenance would be needed, Davis Canyon would require only existing construction technology and offers significant flexibility in locating the underground facility. The salt at Davis Canyon is expected to creep at a slower rate than the salt at the Deaf Smith or the Richton site.

The Deaf Smith site is as favorable or only slightly less favorable than the Davis Canyon site for the major considerations. Because of the presence of interbeds, it may be more difficult to engineer the repository and maintain underground openings and waste-retrieval capability. The favorability of the site is further reduced by the limited flexibility for locating the underground facility and the faster rate of salt creep in comparison with the other salt sites.

The Richton site is generally favorable for all considerations, but it is less favorable than Davis Canyon for host-rock flexibility and less favorable than both of the other salt sites with respect to the potential for

8 0 0 0 8 1 0 6 6

combustible gas. Also, the salt at Richton is expected to creep at a faster rate than the salt at Davis Canyon.

Hanford is generally less favorable than the other sites for the most important considerations (safety hazards and difficulties, engineering measures) and more favorable for the least important considerations. The potential safety hazards and the engineering measures required for construction are the key considerations that make Hanford the least favorable site for this guideline.

7.3.3.1.3 Hydrology

The qualifying condition for the hydrology guideline is as follows:

> The site shall be located such that the geohydrologic setting of the site will (1) be compatible with the activities required for repository construction, operation, and closure; (2) not compromise the intended functions of the shaft liners and seals; and (3) permit the requirements specified in 960.5-1(a)(3) to be met.

Major considerations

On the basis of the qualifying, favorable, and potentially adverse conditions for this guideline (see Table 7-20), there are three major considerations that influence the favorability with respect to the qualifying condition. These major considerations, in order of decreasing importance, are (1) the complexity of required ground-water-control measures, (2) the existence of surface-water systems that could cause flooding of the repository operations area, and (3) the availability of water for repository construction, operation, and closure.

Evaluation of the sites in terms of the major considerations

Complexity of required ground-water-control measures. This consideration includes ground-water conditions that could necessitate extensive and complex ground-water-control measures in shafts and drifts during repository siting, construction, operation, and closure. It relates directly to the qualifying condition by favoring hydrologic conditions that are compatible with repository construction, operation, and closure and will not compromise shaft liners and seals. This major consideration is derived from the first favorable condition and the potentially adverse condition. The complexity of required ground-water-control measures is the most important of the three considerations for hydrology because it has the greatest effect on the ease and cost of repository construction, operation, and closure. A summary of the evaluation for each site follows:

Table 7-20. Guideline-condition findings by major consideration--hydrology[a,b]

Condition	Davis Canyon	Deaf Smith	Hanford	Richton Dome	Yucca Mountain
MAJOR CONSIDERATION 1: COMPLEXITY OF REQUIRED GROUND-WATER CONTROL MEASURES					
Favorable condition 1					
Absence of aquifers between the host rock and the land surface.	NP	NP	NP	NP	P
Potentially adverse condition					
Ground-water conditions that could require complex engineering measures that are beyond reasonably available technology for repository construction, operation and closure.	NP	NP	NP	NP	NP
MAJOR CONSIDERATION 2: EXISTENCE OF SURFACE-WATER SYSTEMS THAT COULD POTENTIALLY CAUSE FLOODING OF THE REPOSITORY					
Favorable condition 2					
Absence of surface-water systems that could potentially cause flooding of the repository.	NP	NP	NP	NP	NP
MAJOR CONSIDERATION 3: AVAILABILITY OF WATER FOR CONSTRUCTION, OPERATION AND CLOSURE					
Favorable condition 3					
Availability of the water required for repository construction, operation, and closure.	P	P	P	P	P

[a] Key: NA = not applicable; NP = for the purpose of this comparative evaluation, the favorable or potentially adverse condition is <u>not</u> present at the site; P = for the purpose of this comparative evaluation, the favorable or potentially adverse condition is present at the site.

[b] Analyses supporting the entries in this table are presented in Chapter 6 of the environmental assessment for each site.

At the Davis Canyon site, rock units above the host rock and the host rock are generally of low permeability. Several minor aquifers with limited water-producing potential are present above the host rock. The small amounts of ground water that would be encountered during shaft sinking can be readily handled with standard engineering practice.

At the Deaf Smith site, an aquifer is present between the host rock and the ground surface. The potential for ground-water inflows during the sinking of shafts through the High Plains aquifer, the unconsolidated sediments above the repository, and the water-bearing interbeds in the host salt bed can be controlled with established technology, such as pretreatment by freezing. Little ground water is expected within the repository horizon.

At the Hanford site, a number of aquifers exist between the host rock and the ground surface. During shaft sinking, ground water would be controlled with established practices. After construction, seals associated with the shaft liner would protect the shafts and repository drifts from ground-water inflow. The construction of the repository may result in the penetration of water zones under high hydrostatic head. However, the potential for large, inadvertent water inflows can be reduced by probing with exploratory boreholes in advance of drifting to locate water zones under high hydrostatic head.

At the Richton site, several aquifers are present above the host rock and adjacent to the flanks of the dome. Control of ground water during shaft sinking through the sediments above the dome and caprock would require ground freezing because of potentially high ground-water inflows and the presence of unconsolidated sediments. Little water is expected within the dome.

At the Yucca Mountain site, there are no aquifers between the host rock and the ground surface. Because the repository would be located above the water table, no significant amounts of ground water are likely to be encountered in the shafts or underground workings.

Existence of surface-water systems that could flood the geologic repository operations area. This consideration includes ponds, lakes, streams, and manmade impoundments that could flood the underground workings during repository construction, operation, and closure, endangering the safety of workers and interrupting repository operations. It relates to the implied concern in the qualifying condition with the compatibility of surface-water systems with repository construction, operation, and closure. This consideration is derived from the second favorable condition and is considered second in importance because it is generally easier to manage the potential for surface flooding than underground ground-water inflows: standard engineering measures like dikes and berms can minimize the potential for flooding. A summary of the evaluation for each site follows.

At the Davis Canyon site, the area of the surface facilities could be inundated by the 100-year and the probable maximum flood. To reduce the risk of flooding, the site would be filled in to an elevation above the flood level, and control channels would be constructed to divert any flow around the site.

At the Deaf Smith site, minor flooding occurs within the controlled area, but there are no surface-water systems that could flood the restricted area. Although a small portion of the restricted area may intercept the flood plain of the probable maximum flood, there is considerable flexibility for locating surface facilities and shafts to avoid flooding.

At the Hanford site, the probable maximum flood of the Columbia and Yakima Rivers would not reach the repository operations area. The maximum flood of the ephemeral Upper Cold Creek could reach the area proposed for the surface facilities, but flooding would be shallow and short-lived, and it would not pose a significant hazard to surface or subsurface facilities. The 100-year flood of Cold Creek is not expected to reach the surface facilities.

The surface facilities at the Richton site would be located on high ground that is drained by Fox Branch and a tributary of Linda Creek. The present site of the surface facilities would be modified by filling in low-lying areas, constructing dikes, or diverting streams to prevent flooding of the surface and underground facilities.

At the Yucca Mountain site, each of the candidate locations for surface facilities is above the flood plain of the 100-year flood, but parts of these areas would be affected by the 500-year flood and the regional maximum flood. The proposed exploratory-shaft site in Coyote Wash may be subject to localized flooding and debris flow. However, the impacts of this infrequent, localized flooding can be mitigated by engineering measures like channel lining and drainage diversion.

Availability of water for repository construction, operation, and closure. This consideration relates to the availability of an ample source of ground or surface water for repository construction, operation, and closure. It is related to the concern in the qualifying condition about the compatibility of the geohydrologic setting with the ease and cost of construction and is derived from the third favorable condition. This consideration is third in importance because, although it affects the ease and cost of construction, it has a limited effect on the technical feasibility of construction, operation, and closure. A summary of the evaluation for each site follows.

At the Davis Canyon site, ample water for repository development is not available in the immediate vicinity of the site, but water could be purchased from the San Juan Water Conservancy District. The water supply may be taken from the Colorado River south of Potash, Utah, and piped 22 miles from the river to the repository site along the proposed railroad access route.

The availability of water at the Deaf Smith site may be limited because the High Plains aquifer could become depleted through normal irrigation use within the operating lifetime of the repository. Consequently, the underlying Dockum aquifer will be evaluated during site characterization to determine its suitability as a supplementary water supply.

At the Hanford, Richton, and Yucca Mountain sites, there is ample ground water in the immediate vicinity of the sites for repository construction,

8 0 0 0 8 1 0 7 0

peration, and closure. There is little doubt that this water would be vailable for a repository at these three sites.

ummary of comparative evaluation

The Yucca Mountain site is the most favorable site for the preclosure ydrology guideline. It is the leading site for the most important onsideration: the repository would be located in the unsaturated zone, and o significant amounts of ground water are likely to be encountered in the hafts and drifts. There is also ample water available for construction, peration, and closure from a source within the controlled area. Although here is a potential for flash flooding, standard drainage-control measures ould protect against such flooding. Current engineering technology is more han adequate to handle the hydrologic conditions that are likely to be ncountered at Yucca Mountain.

Davis Canyon is only slightly less favorable for the most important major onsideration because little difficulty is expected in controlling ground ater at the site. However, there is a potential for flooding, and water for he repository would have to be piped in from the Colorado River.

At the Richton site, shafts can be sunk with standard technology, but round freezing would be required to control ground-water inflow; therefore, he Richton site is less favorable than Davis Canyon and Yucca Mountain for he most important major consideration. Ample water is available for epository construction, operation, and closure, but engineering measures ould be required to divert surface drainage.

The Deaf Smith and the Hanford sites are least favorable for this uideline. At the Deaf Smith site, ground-water conditions would make shaft inking more difficult and would require ground freezing. There is also ncertainty about the availability of ample water for the life cycle of the epository. However, there is no potential for flooding within the restricted rea. At the Hanford site, there is a potential need for ground-water-control easures that are more complex and costly than those at the other sites. here is minimal potential for flooding the surface or subsurface facilities nd an ample supply of water for construction, operation, and closure. owever, the potential complexity of the required ground-water-control easures is judged to reduce the overall favorability of the Hanford site in omparison with Davis Canyon and Richton.

.3.3.1.4 Tectonics (preclosure)

The qualifying condition for preclosure tectonics is as follows:

The site shall be located in a geologic setting in which any projected effects of expected tectonic phenomena or igneous activity on repository construction, operation, or closure will be such that the requirements specified in §960.5-1(a)(3) can be met.

Major considerations

The objective of the preclosure tectonics guideline is to ensure that a site is not likely to be affected by tectonic events of such magnitude that unreasonable or unfeasible engineering design features would be required. On the basis of the qualifying, favorable, and potentially adverse conditions for this guideline (see Table 7-21), two major considerations are identified that affect favorability with respect to the qualifying condition: (1) the potential for earthquake ground motion at the site and (2) the potential for faulting at the site. These major considerations are of about equal importance.

Evaluation of sites in terms of the major considerations

It is important to note that the third potentially adverse condition is not present at any of the five sites (see Table 7-19). The historical seismicity in the geologic setting was used as the basis of this evaluation because it is representative of earthquake potential for short periods of time, such as the preclosure period for the repository. Current understanding indicates that a seismic event of larger than historical magnitude is not likely (less than about 1 chance in 100) to occur during the operation and closure of the repository. This interpretation does not consider earthquakes that may be associated with design events or ground-motion estimates (the second favorable condition and the second potentially adverse condition) or evidence of active faults (the first potentially adverse condition). These are considered to be of low probability. However, as discussed below, the evaluation of ground-motion potential (first major consideration) does consider the earthquake potential of tectonic structures and faults, and data developed for the evaluation of the third potentially adverse condition.

The qualifying condition for the preclosure tectonics guideline also requires an assessment of the potential for igneous activity at each of the sites. On the basis of preliminary data, igneous activity is not expected to cause any adverse preclosure impacts at any of the sites, and therefore igneous activity is not discussed further in this section.

Potential for earthquake ground motion at the site. This consideration requires an evaluation of whether strong ground motion at the site could lead to safety hazards or difficulties during repository siting, construction, operation, and closure. It is related directly to the concern in the qualifying condition about the effects of tectonic phenomena and technical feasibility. It is derived from the favorable condition and the second and third potentially adverse conditions. This major consideration is about equal in importance to the expected impact of fault displacement. Although the likelihood of ground motion at a given site is generally higher than the likelihood of faulting, ground motion and faulting can both be significant design considerations.

Contributing factors for this major consideration include the historical earthquake record, evidence of man-induced seismicity, estimates of ground motion from historical and man-induced earthquakes, the correlation of earthquakes with tectonic structures and faults, and evaluations of the effects of ground-motion hazards on design. In addition, the evaluation of

Table 7-21. Guideline-condition findings by major consideration--tectonics (preclosure)[a,b]

Condition	Davis Canyon	Deaf Smith	Hanford	Richton Dome	Yucca Mountain
MAJOR CONSIDERATION 1: POTENTIAL FOR EARTHQUAKE GROUND MOTION AT THE REPOSITORY SITE					
Favorable condition					
The nature and rates of faulting, if any, within the geologic setting are such that the magnitude and intensity of the associated seismicity are significantly less than those generally allowable for the construction and operation of nuclear facilities.	NP	P	NP	P	NP
Potentially adverse condition 2					
Historical earthquakes or past man-induced seismicity that, if either were to recur, could produce ground motion at the site in excess of reasonable design limits.	NP	NP	NP	NP	NP
Potentially adverse condition 3					
Evidence, based on correlations of earthquakes with tectonic processes and features (e.g., faults) within the geologic setting, that the magnitude of earthquakes at the site during repository construction, operation, and closure may be larger than predicted from historical seismicity.	NP	NP	NP	NP	NP
MAJOR CONSIDERATION 2: POTENTIAL FOR FAULT DISPLACEMENT AT THE REPOSITORY SITE					
Potentially adverse condition 1					
Evidence of active faulting within the geologic setting.	P	NP	P	NP	P

ground motion depends on the evaluation of potential surface faulting in the geologic setting. The potential for ground motion generally increases as the potential for faulting near the site increases. However, the ground-motion potential from all seismogenic sources cannot be evaluated individually: it must be considered collectively to accurately evaluate the potential for ground motion and associated uncertainties. A summary of the evaluation for each site follows.

At Davis Canyon, the estimated ground motion is not significantly smaller than that generally allowable for nuclear facilities. These estimates are based on the assumption that the maximum earthquake, which has a magnitude of 6.5, could occur at Shay Graben, the closest (10 miles) significant structure in the geologic setting. Ground-motion estimates associated with these faults are moderate compared with design values for nuclear facilities. Since 1979, microearthquake monitoring has detected no seismicity at the site. However, events with a magnitude of up to about 3.0 have occurred in the Paradox Basin. Although the seismic hazard appears to be low, the record of seismicity is limited. Man-induced seismicity may be occurring at one location in the Paradox Basin, but it is not firmly established. Estimates of ground motion will remain uncertain until the faults near Shay Graben and the Needles area and the potential for man-induced seismicity at the site are fully evaluated.

At the Deaf Smith site, there appear to be no Quaternary faults in the geologic setting, and the known faults are not associated with recorded seismic activity. The site has a very low potential for induced seismicity. Predicted ground motions are significantly smaller than those generally allowable for nuclear facilities. Quaternary faulting (i.e., the Meers fault) outside the geologic setting appears to be present along the Amarillo Uplift. Study of the Meers fault to determine its tectonic characteristics and earthquake potential may influence evaluations of the portion of the Amarillo Uplift in the Texas Panhandle. This may effect estimates of ground motion at the site, although the distance to the uplift is more than 30 miles. On the basis of a qualitative understanding of present conditions, projected ground motions are well below the level that is likely to cause significant damage to underground structures.

At the Hanford site, potential ground motions are not significantly smaller than those generally allowable for nuclear facilities. However, the ground motions associated with possible Quaternary faulting in the vicinity of the Hanford site are within reasonable design limits for nuclear facilities. An earthquake record of over 100 years shows the historical seismicity of the Columbia Plateau to be low to moderate. This is consistent with data from seismic monitoring initiated in 1969. Recurrence rates for moderate earthquakes (of a magnitude greater than 6 to 6.5) appear to exceed 10,000 years. Earthquakes are not currently associated with mapped geologic structures, nor do hypocenters align in a manner suggesting that there could be unmapped buried faults in the Pasco Basin. The impact and the likelihood of potential earthquake swarms at the repository site have not been determined. Although uncertainties exist, it is expected that the effects of subsurface ground motion can be mitigated by existing engineering measures.

At the Richton site, ground motion is expected to be significantly smaller than that generally allowable for nuclear facilities. Studies to date

provide no evidence of active faulting during the Quaternary Period and no association of known faults with recorded seismic events within the geologic setting. The site is in an area of extremely low earthquake frequency, and there is little potential for induced seismicity. The nearest known earthquake epicenter is 45 miles away. On the basis of a qualitative understanding of present conditions, predicted ground motions are well below the level that could cause significant damage to underground structures. Uncertainty in estimates of ground motion is considered to be relatively low, primarily because the site is located in a region with a very low level of historical seismicity. However, there is some uncertainty about the southern extent of the New Madrid fault zone. This would likely result in more long-period motion than shaking from a maximum earthquake in the site's geologic setting.

On the basis of current knowledge, there is large uncertainty in the evaluation of potential ground motion at the Yucca Mountain site. Data on the age of the last movement, the total amount of movement during the Quaternary Period, and the extent of faulting within 1 to 5 kilometers of the site are limited, and the assessment of ground motion is preliminary. It is premature to place much confidence in estimates of ground motion until a more complete assessment can be made of the extent of faulting near the site and of the appropriate assumptions for such parameters as fault length, fault displacement, attenuation relationships, and earthquake potential. The brief historical seismic record at Yucca Mountain shows no earthquakes that have produced damaging ground motions, and current estimates of recurrence intervals for large earthquakes (greater than magnitude 7.0) in the geologic setting exceed about 25,000 years. Although estimates of ground motion for the surface and subsurface facilities are not expected to be significantly smaller than for other nuclear facilities, reasonably available technology is expected to be sufficient to accommodate the seismic design requirements. These requirements would be established during site characterization. This judgment is based on current knowledge of faults near the site. The maximum acceleration from ground motion induced by underground nuclear explosions is less than that from natural earthquakes. The reader is referred to Chapter 6 of the environmental assessment for Yucca Mountain for a description of the approach to be used in establishing the appropriate seismic design requirements.

Expected impact of fault displacement at the repository site. This consideration requires an assessment of fault-displacement potential that could lead to safety hazards or difficulties during repository siting, construction, operation, and closure. It is related directly to the concern in the qualifying condition about technical feasibility and the effects of tectonic phenomena. It is derived from the first potentially adverse condition and is equal in importance to the first major consideration. Although the likelihood of faulting at a site is generally lower than the likelihood of ground motion, the need to design for fault displacement can have a significant effect on the site's favorability. Successful construction experience where fault-displacement conditions exist is an important contributing factor to favorability. Contributing factors for this major consideration are the evidence and location of, and rates of movement on, Quaternary faults in the geologic setting. A summary of the evaluation for each site follows.

8 0 0 0 8 1 0 7 5

In the Paradox Basin, Quaternary faulting is suspected in the vicinity of the Davis Canyon site at both Shay Graben and the Needles fault zone. However, additional data are needed to determine whether these displacements are seismogenic or related to gravitational sliding, salt flow, or salt dissolution. These faults do not trend toward the repository operations area, and there is no known seismicity within the site boundaries. Thus, no impact is expected from fault displacement at the repository site. There is uncertainty associated with this conclusion because of the possibility that mining the repository could induce seismicity at the site.

Since no active surface faulting of Quaternary age has been recognized in the geologic setting of the Deaf Smith site, there is no expected impact from fault displacement. The geologic setting has experienced little or no tectonic activity during the Quaternary Period. The Meers fault, which appears to show evidence of recent activity, is outside the geologic setting.

Quaternary faults have been identified within the geologic setting of the Hanford Site, but they do not intersect the repository location. Active faults are not known to be present at the site. Since the site is away from areas of known or suspected surface faults and there is no significant seismicity within its boundaries, no impacts from fault displacement are expected. There is uncertainty associated with this conclusion because the potential effects of earthquake swarms on underground facilities are unknown.

Studies to date provide no geologic evidence of Quaternary faulting in the geologic setting of the Richton site. Growth faults, which are not generally associated with seismicity, may occur in the Mississippi salt basin. However, because the Mississippi salt basin is not considered to contain areas of active subsidence and is isolated from the area of the Gulf Coast that is associated with growth faults in the Wiggins Anticline, active growth faulting is not expected.

There are uncertainties in the data on the age of last movement and the total movement of faults at and near Yucca Mountain during the Quaternary Period. Since the area has been mapped and studied in sufficient detail, it is unlikely that major fault zones are undetected. New data may indicate 1 centimeter of fault displacement in the eastern Crater Flat area more recently than about 6,000 years ago. Estimated recurrence intervals for large earthquakes (magnitude 7.0 or greater) associated with surface faulting appear to be long (on the order of 25,000 years). Only minor seismicity has been detected near the site. These conditions suggest that the potential for fault displacement at the site is low during the preclosure period; thus, there are no expected impacts from fault displacement. Existing seismic design technology can accommodate small amounts of surface displacement if necessary.

Summary of comparative evaluation

The Richton site is the most favorable for the preclosure tectonics guideline. It is located in a region of extremely low ground motion and seismic hazard. Ground motion at the site is likely to be accommodated by reasonably available technology. No seismogenic faults have been identified in the geologic setting.

9 0 0 0 8 1 0 7 6

The Deaf Smith site is similar to the Richton site for the two major considerations, except for a slightly higher potential for ground-motion impacts from the Amarillo Uplift, which reduces its favorability. No seismogenic faults have been identified in the geologic setting, the ground-motion potential for the region is low, and ground motion at the site is likely to be accommodated with existing technologies. There is some uncertainty in the potential for ground motion, primarily because the impact of earthquakes on the Amarillo Uplift requires additional study.

The Davis Canyon and the Hanford sites are favorable with respect to the potential impacts of fault displacement. However, estimates of ground motion at both sites are uncertain because of Quaternary Period faults in the geologic setting and the potential for earthquake swarms at Hanford and man-induced seismicity at Davis Canyon. Although current estimates of ground motion for both sites are considered moderate, the seismic record qualitatively indicates that the seismic hazard for these regions is low. At Davis Canyon the closest known potential seismogenic fault is about 10 miles from the site, but this fault would not intersect the site.

At Hanford, the closest potential seismogenic faults are 6.2 to 7.4 miles from the site, but they, too, would not intersect the Hanford site.

Yucca Mountain is the least favorable site for both major considerations. A qualitative understanding of faulting near the site supports the conclusion that individual faults have long recurrence intervals (on the order of 25,000 years or more) for large earthquakes (magnitude 7.0 and greater). There are uncertainties with respect to the age of the last movement and the total amount of Quaternary movement on faults within 1 to 5 kilometers the site. Although estimates of ground motion are preliminary, it is expected that available technology could accommodate likely ground motion. Final estimates of ground motion will depend on the outcome of further seismic evaluations and the full assessment of nearby faults.

7.3.3.2 System guideline on the ease and cost of siting, construction operation, and closure

The third preclosure system guideline is ease and cost of siting, construction, operation, and closure. The pertinent elements are (1) the site characteristics that affect siting, construction, operation, and closure; (2) the engineering, materials, and services necessary to conduct these activities; (3) written agreements between the DOE and affected States and affected Indian tribes and the Federal regulations that establish the requirement for these activities; and (4) the repository personnel at the site during siting, construction, operation, or closure. It is third in importance because it does not relate directly to the health, safety, and welfare of the public or the quality to the environment. A summary of the pertinent characteristics of the host rock at each site and estimates of the engineering, materials, services, and personnel costs are presented below for the salt, basalt, and tuff sites.

Total life-cycle cost estimates* for a repository in basalt (the Hanford site), salt (the Davis Canyon, Deaf Smith, and Richton sites), and tuff (the Yucca mountain site) are shown in Table 7-22. These estimates were developed as part of the DOE's annual evaluation of the adequacy of the fee (1 mill per kilowatt-hour) paid into the Nuclear Waste Fund for disposal services and do not represent final cost estimates. More definitive estimates will be completed when more-detailed designs and site-characterization data become available. The salt cost estimate was based on design parameters that are representative of a generic salt site. Therefore, this estimate does not take into account site-specific differences that exist at each salt site.

Table 7-22 Repository cost estimates
(billions of 1984 dollars)

Site	D&E	Construction	Operation	Decommissioning	Total
Basalt	1.5	2.3	8.3	0.2	12.3
Salt[a]	1.8	1.6	4.9	0.2	8.5
Tuff	1.5	1.1	5.8	0.1	8.5

[a]All salt sites.

The major cost components identified in Table 7-22 are defined below

- Development and evaluation (D&E): Includes costs for all activities, excluding final design and construction, that are conducted before repository operation. These activities include site characterization, conceptual and license-application design, licensing, and technology development.

- Construction: Includes costs for final design and costs for the construction of all surface facilities and a limited number of underground waste-disposal rooms and corridors.

- Operation: Includes costs for the construction of most of the underground rooms and corridors and costs for the operation of the surface and underground facilities.

- Decommissioning: Includes cost for the decontamination and decommissioning of the surface facilities.

- Total: Represents the total life-cycle cost for a geologic repository and includes the sum of all the above cost components.

*U.S. Department of Energy, Analysis of the Total System Life Cycle Cost for the Civilian Radioactive Waste Management Program, DOE/RW-0024, Washington, D.C., April 1985.

The uncertainty that has been assigned to these estimates is based on engineering judgment and is ±35 percent of the total cost of the facility. This, coupled with a 10 to 40 percent contingency already built into the estimates, reflects the accuracy of preconceptual design from which the costs were derived. The exact contingency used depends on the complexity of the design of specific repository facilities or processes.

Salt repository

Host-rock depth. The horizons of the host rock at the Davis Canyon, Deaf Smith, and Richton sites are 3,000, 2,700 and 2,100 feet below the surface, respectively. The horizon assumed for the generic salt cost estimate is 3,000 feet below the service. This is a relatively deep horizon when compared with other siting alternatives.

Rock conditions and tunnel stability. At the Davis Canyon and Richton sites, the artificial rock support required is expected to be minor (only occasional rock bolting) because of the apparent massiveness of the salt and the absence of nonsalt interbeds in the host rock. However, significant maintenance may be required for underground openings because of salt creep. Salt creep will gradually reduce the size of the underground openings, and reexcavation of the openings will be required to maintain the minimum opening dimensions.

At the Deaf Smith site, the potential for roof instability is due to the interbeds that would exist above the underground openings. Rock falls can be prevented by adequate artificial support (regular rock bolting). As with the Davis Canyon and the Richton sites, significant maintenance may be required.

The in situ rock temperatures for each of the three sites are as follows: 34-43°C (93-109°F) for Davis Canyon, 27°C (81°F) for Deaf Smith, and 50°C (122°F) for Richton site.

The rock conditions assumed for the salt cost estimate include good tunnel stability, like those of the Davis Canyon and Richton sites, and favorable in situ rock temperatures similar to the Davis Canyon site. Reexcavation is assumed to be necessary to maintain the underground openings at all salt sites and was therefore assumed for the cost estimate. These parameters were selected to be representative of a generic salt site.

Ground-water conditions. At the Davis Canyon site, one minor aquifer is present above the host rock. The small amounts of ground water (28 gallons per minute) that would be encountered during shaft sinking can be readily handled with standard engineering practices. Little water is expected at the repository horizon.

At the Richton site, several regional aquifers are present above the host rock and adjacent to the flanks of the dome. Ground-water control during shaft sinking through the above-dome sediments and caprock would require ground freezing because of potentially high ground-water inflows (1,700 gallons per minute) and unconsolidated sediments above the salt dome. Little water is expected at the repository horizon the dome.

At the Deaf Smith site, there are aquifers between the host rock and the ground surface. The control of water while sinking shafts through these aquifers and water-bearing interbeds within the evaporite section can be accomplished with established technology. Potentially high ground-water inflows (1,400 gallons per minute) and unconsolidated sediments above the repository require pretreatment by freezing to allow shaft sinking through these sediments. Little water is expected within the repository horizon.

The salt cost estimate assumed that only small amounts of water would be encountered during shaft sinking (similar to Davis Canyon) and at the repository horizon (similar to all three salt sites). These conditions were assumed to be representative of a generic salt site.

Gassy conditions. Although there is no direct evidence that toxic gas is present at any of the three salt sites, experience in salt mines at other locations suggests the possibility. The hazards from such gas can be mitigated through safety procedures and adequate ventilation. These gassy conditions have been assumed in the generic salt cost estimate.

Subsurface conditions. Although specific salt sites may have certain subsurface conditions that are less favorable than others, on balance, it was assumed that mining will be conducted in a relatively good environment. This assumption was based on the subsurface conditions discussed above for the generic salt site.

Ventilation requirements. The ventilation requirements for salt can be described as moderate in comparison with basalt and tuff. Ventilation requirements are higher than those for tuff because of the deeper repository horizon and gassy conditions, but not as high as those for basalt.

Waste-package costs. The design for the waste package is determined by subsurface conditions. The salt waste package consists of a thick-walled carbon-steel container and an internal canister assembly. The internal canister assembly segregates fuel rods into compartments for the consolidated spent-fuel design, whereas a spaceframe is used for the unconsolidated spent-fuel design. No external packing is assumed. The waste-packages assumed for the generic salt cost estimate are as follows:

Parameter	Unconsolidated spent fuel	Consolidated spent fuel
PWR/BWR ratio	1/2	12/30
Number of packages	4,600	12,200
Material	Carbon steel	Carbon steel

The total cost for the fabrication of all waste packages for a salt repository is $0.7 billion. This cost is lower than that for both tuff and basalt because salt repository emplaces significantly fewer waste packages than either tuff or basalt.

Excavation quantities. Given the waste-package requirements, the excavation requirements can be calculated. For the cost estimates used here,

8 0 0 0 8 1 1 0 3 0

it was assumed that about 22 million tons of salt will be excavated. This includes 4 million tons of salt reexcavated because of creep. The total amount excavated is higher than that assumed for basalt and tuff.

Mining method. The generic salt cost estimate assumed that a mechanized mining technique will be used to develop the underground facilities. Using this technique, mining is faster than mining by the conventional drill-and-blast technique, which is used for harder rocks like tuff and basalt.

Mining rate. The mining rate for salt can be characterized as "fast average." This rating is due to high mining productivity (tons per man-shift), which is the result of the following:

- The relative softness of the rock.
- The stability of the underground openings.
- Small quantities of water underground.
- Low temperatures.

The productivity for salt is 13.3 tons per man-shift. Salt has the highest productivity of all sites considered.

Underground-facility construction ease. The construction of the underground facilities will be easier at a repository located in salt than a repository located in basalt or tuff. This conclusion is based on the information previously presented which discussed the less difficult mining conditions associated with the salt repository.

Staffing levels and labor rates. Given the mining conditions expected at the generic salt site assumed for the cost estimate, staffing levels for the underground development can be estimated. The staffing levels (in full-time equivalents) for the emplacement period are as follows:

Surface	863
Underground	252
Total	1,115

These estimates are low when compared with other siting alternatives and result from the more favorable mining conditions expected at the salt sites.

Salt has the lowest labor rate ($28.50 per hour) of the sites considered. When combined with the low staffing levels assumed for salt, the labor cost for salt is expected to be low.

Underground facilities costs. Assuming the conditions described above, the total (construction, operation, and decommissioning) cost of the underground facilities for a salt repository is $2.2 billion. This is 26 percent of the total cost of $8.5 billion shown in Table 7-22. The remaining $6.3 billion consists of $1.8 billion for development and evaluation, $3.8 billion for surface facilities, and $0.7 for waste packages. The underground facilities cost for salt ($2.2 billion) is lower than that for the other sites.

Operation duration and backfilling. The life of a salt repository is 53 years long. It consists of a 27-year emplacement period, a 23-year caretaker

8 0 0 0 8 1 0 8 1

period, and a 3-year backfill period. Because salt has the shortest backfill period of all the sites considered, salt also has the shortest operating life. The short operating phase, coupled with the low labor cost, results in low operating costs for salt.

Operating cost. The operating cost for a repository in salt is $4.9 billion. This is 58 percent of the total cost of $8.5 billion and is clearly the largest portion of the total-facility cost. The remaining $3.6 billion consists of $1.8 for development and evaluation, $1.6 billion for construction, and $0.2 billion for decommissioning.

Most of the operating costs are associated with the operation of the surface facilities. Of the $4.9 billion operating cost, $2.9 billion is for the operation of the surface facilities, $1.3 billion is for underground development, and $0.7 billion is for the fabrication of the waste packages.

Total facility costs. Table 7-23 presents the total facility costs for a generic salt repository. This table summarizes the costs mentioned in this section and is consistent with the costs shown in Table 7-22.

Table 7-23. Cost estimates for a salt repository
(billions of 1984 dollars)

Cost category	D&E	Construction	Operation	Decommissioning	Total
D&E	1.8	0.0	0.0	0.0	1.8
Surface	--	0.8	2.9	0.1	3.8
Underground	--	0.8	1.3	0.1	2.2
Waste packages	--	0.0	0.7	0.0	0.7
Total	1.8	1.6	4.9	0.2	8.5

The total facility cost for salt is the same as for tuff and lower than that for basalt. This is due mainly to the lower underground costs resulting from favorable subsurface conditions.

Basalt repository

Host-rock depth. The interior of the Cohassett flow has been selected as the preferred candidate horizon for the basalt repository. The horizon is approximately 3,300 feet below the surface. It is the deepest horizon of all sites considered.

8 0 0 0 8 1 0 8 2

Rock conditions and tunnel stability. The basalt at the Hanford site is a physically and chemically stable rock that will be little affected by repository conditions. The rock is fractured. Heat-induced and rock-matrix fracturing are expected but will be minor and will not create a safety hazard.

High stress conditions are associated with basalt. This suggests that artificial support would be required for repository construction, operation, and closure. This artificial support is not considered minimal and will consist of rock bolts and shotcrete over wire mesh. This support is needed to control instabilities in the rock caused by stress. An example of a stress-induced instability is rock bursts. However, rock bursts are expected to be mild because of the low extraction ratio planned for the repository excavation and the closely jointed nature of the dense interiors. Rock bolts will use the high strength of basalt to control rock bursts or other deformations.

Basalt should not creep significantly, and therefore, maintenance of the underground openings will not be excessive.

The rock temperature in the Cohassett flow is high (51°C, or 124°F) and is a potential hazard to the health of the personnel working underground. A ventilation system that provides a continuous, acceptable working environment must be installed at the basalt repository. The effects of temperature are not expected to cause significant deterioration of support or instability of the rock.

Ground-water conditions. Aquifers are present between the Cohassett flow and the land surface. Ground-water inflow into the repository is high and is estimated to be about 100 gallons per minute. A worst-case estimate would be as high as 3,400 gallons per minute, but this is considered unlikely. The potential for these large water inflows can be reduced by drilling exploratory boreholes before excavation to identify any zones of abnormal water production.

During shaft sinking and the construction of the underground facility, ground-water will be controlled by established practices. After construction, seals associated with the shaft liner would protect the shafts and the repository drifts from ground-water inflow.

Because the rock temperature is high, it is expected that the water temperature will also be high. There is also the potential for water to enter the repository under high pressure.

Gassy conditions. Methane gas is not indigenous to basaltic rock. However, methane could occur in the underground openings because it might be introduced with any water inflow. A way to minimize the potential for methane entering the underground facilities is to control the water inflow into the repository. Ventilation will be required to control the concentration of any methane present underground. However, because of the limited amount of gas expected underground, gassy conditions were not assumed for the basalt cost estimate.

Subsurface conditions. Mining will be conducted in a difficult environment because of the conditions discussed above.

8 0 0 0 8 1 0 8 3

Ventilation requirements. The ventilation requirements for basalt are higher than those for salt and tuff because of the difficult subsurface conditions described above.

Waste-package costs. The design for the waste package is determined by subsurface conditions. The basalt waste package consists of a thick-walled carbon steel container and an external packing assembly. An internal spaceframe is included for unconsolidated spent fuel. The external packing consists of a mixture of basalt and bentonite. The waste-package parameters assumed for the cost estimate are as follows:

Parameter	Unconsolidated spent fuel	Consolidated spent fuel
PWR/BWR ratio	4/9	4/9
Number of packages	1,000	38,800
Material	Carbon steel	Carbon steel

The total cost for the fabrication of all basalt waste packages is $1.1 billion. This cost is high because the basalt repository emplaces more waste-packages than any of the other sites.

Excavation quantities. Given the waste-package requirements, the excavation requirements can be calculated. For the cost estimates used here, it was assumed that about 19 million tons of basalt will be excavated. This quantity is higher than that assumed for tuff, but lower than that assumed for salt.

Mining method. The basalt design assumed that the conventional drill-and-blast excavation technique will be used to develop the underground facilities. This technique is particularly suited to the subsurface conditions found at Hanford. For example, this technique is required because basaltic rock is very hard. However, the basalt mining method is slower than mechanized mining.

Mining rate. The mining rate for basalt can be characterized as "slow average." This rating is due to a low mining productivity (tons per man-shift), which is the result of the following:

- The hardness of basaltic rock.
- The depth of the repository horizon.
- The high stress conditions.
- The presence of large quantities of water underground.
- High temperatures.
- High excavation quantities.

The productivity for basalt is 3.1 tons per man-shift. This is the lowest productivity of all sites considered.

8 0 0 0 8 1 0 8 4

Underground facilities construction ease. The construction of the underground facilities will be more difficult for a repository located in basalt than a repository located in tuff or salt. This conclusion is based on the information previously presented which discussed the more difficult mining conditions associated with the deeper, higher temperature, saturated zones of the basalt repository.

Staffing levels and labor rates. Given the mining conditions expected at Hanford, staffing levels for the underground development can be estimated. These estimated staffing levels for the emplacement period are as follows:

Surface	917
Underground	1,051
Total	1,968

As shown above, the difficult mining conditions result in high staffing levels. When combined with a high labor rate ($31.00 per hour), the high staffing levels lead to high labor costs for basalt.

Underground-facility costs. Assuming the conditions described above, the total (construction, operation, and decommissioning) cost of the underground facilities of a basalt repository is $6.1 billion. This is just under 50 percent of the total cost of $12.3 billion shown in Table 7-22. The remaining $6.2 billion consists of $1.5 billion for development and evaluation, $3.6 billion for surface-facilities, and $1.1 billion for waste-packages. The cost of the underground facilities ($6.1 billion) is the highest of all sites considered.

Operating duration and backfilling. The basalt repository has a longer operating life than both tuff and salt: 61 years. It consists of a 27-year emplacement period, a 23-year caretaker period, and an 11-year backfill period. This is the longest operating phase of all sites considered because basalt assumed the longest backfill period. The long operating life, coupled with the high staffing levels and high labor rates, leads to high operating costs for basalt.

Operating cost. The operating cost for a basalt repository at the Hanford site is $8.3 billion. This is 67 percent of the total cost of $12.3 billion and is clearly the largest partion of the total facility cost. The remaining $4.0 billion consists of $1.5 billion for development and evaluation, $2.3 billion for construction, and $0.2 billion for decommissioning.

Most of the operating costs are associated with underground development. Of the $8.3 billion, $4.3 billion is for underground development, $2.9 billion is the operation of the surface facilities, and $1.1 billion is for the waste packages.

Total facility costs. Table 7-24 presents the total-facility costs for the basalt repository. This table summarizes the costs mentioned in this section; the costs are consistent with the costs shown in Table 7-22.

0 0 0 0 8 1 0 8 5

Table 7-24. Cost estimates for a basalt repository (billions of 1984 dollars)

Cost category	D&E	Construction	Operation	Decommissioning	Total
D&E	1.5	0.0	0.0	0.0	1.5
Surface	---	0.5	2.9	0.2	3.6
Underground	---	1.8	4.3	0.0	6.1
Waste packages	---	0.0	1.1	0.0	1.1
Total	1.5	2.3	8.3	0.2	12.3

The total facility cost for basalt is the highest of all sites considered. This is due primarily to the higher underground costs resulting from the difficult subsurface conditions.

Tuff repository

Host rock depth. The proposed repository horizon is about 1,200 feet deep. This is the most shallow horizon of all sites considered.

Rock conditions and tunnel stability. The welded tuff of the Toppah Spring Member at Yucca Mountain is a physically and chemically stable rock that will be little affected by repository conditions. Currently, the rock is fractured, and any additional thermally induced fracturing will be minor.

The rock strength of welded tuff and the associated in situ stresses are favorable. The fractured nature of the tuff, however, may provide the potential for rock falls in underground openings. Faults encountered in the underground facility may also contribute to local instabilities because of the poor quality of rock associated with the fault zones. The potential for rock falls can be mitigated through the use of appropriate artificial supports for the underground openings. Previous excavation experience at the Nevada Test Site indicates that the expected artificial support requirements at Yucca Mountain are regularly spaced rock bolts, with steel mesh covering the rock surface for safety. Occasional supplemental bolting or shotcrete may be required in local areas of poor-quality rock. These requirements are considered minimal.

Little deterioration of the rock and the artificial support is expected over time and from temperature changes, since the tuff does not creep. Therefore, the rock is expected to remain in a stable condition and will not require extensive maintenance for the underground openings.

8 0 0 0 8 1 0 8 6

The rock temperature is favorable (27°C or 81°F) and is not expected to be a hazard to the health of the personnel working underground. The effects of temperature are not expected to significantly affect the stability of the mined openings.

Ground-water conditions. At the Yucca Mountain site, there are no aquifers between the host rock and the land surface. Because the repository would be located above the water table, no significant amounts of ground water are likely to be encountered in the shafts or the underground workings.

Gassy conditions. No significant accumulations of toxic gases are expected at the repository horizon. Therefore, gassy conditions have not been assumed for the tuff cost estimate.

Subsurface conditions. Mining will be conducted in a relatively good environment, assuming the conditions discussed above.

Ventilation requirements. The ventilation requirements for tuff are lower than those for basalt and salt. This is a result of the relatively good environment expected underground.

Waste-package costs. The design for the waste package is determined by subsurface conditions. The tuff waste package consists of a stainless-steel canister and an internal spaceframe. No external packing is assumed. The waste-package parameters assumed for the cost estimate are as follows.

Parameter	Unconsolidated spent fuel	Consolidated spent fuel
PWR/BWR ratio	3/9	6/18
Number of packages	1,400	23,100
Material	Stainless steel	Stainless steel

The total cost of fabricating all tuff waste packages is $1.1 billion. This cost is high because of the combined effect of emplacing a large number of waste packages and high material costs. The cost of the tuff waste package is higher than the cost of the salt waste package for this reason. However, the tuff waste package costs the same as the basalt waste package. This happens because, though tuff emplaces a smaller number of packages than basalt, the resulting cost savings are offset by the cost of the stainless-steel container, which is higher than the cost of the carbon-steel container for basalt.

Excavation quantities. Given the waste-package requirements, the excavation requirements can be calculated. For the cost estimates used here, it was estimated that about 17 million tons of tuff will be excavated. This is lower than that assumed for salt and basalt.

Mining method. The tuff design assumed that mechanized mining techniques will be used in conjunction with conventional techniques to develop the underground facilities. This should lead to a mining rate that is faster than that basalt (conventional mining only) but not as fast as that for salt (mechanized mining only).

Mining rate. The mining rate for tuff can be characterized as "fast average." This rating is due to a high mining productivity (tons per man-shift), which is the result of the following:

- Shallow repository horizon.
- The stability of underground openings.
- Lack of water underground.
- Lower temperatures.
- Lower excavation quantities.

The productivity for tuff is 9.1 tons per man-shift. The productivity for basalt is significantly lower because of the more difficult mining conditions that will be encountered. The productivity for salt is higher largely because salt is softer than tuff and therefore can use only totally mechanized mining techniques.

Underground facilities construction ease. The construction of the underground facilities will be easier at a repository located in tuff than a repository located in basalt, but not salt. This conclusion is based on the information previously presented which discussed the mining conditions associated with the tuff repository.

Staffing levels and labor rates. Given the mining conditions expected at the tuff site, staffing levels for the underground development can be estimated. The staffing levels for the emplacement period (in full-time equivalents) are estimated to be as follows:

Surface	846
Underground	372
Total	1,218

The staffing estimates can be characterized as low, but not the lowest of all sites considered. Tuff has the highest labor rate ($32.00 per hour) of the sites considered. However, when combined with the staffing levels assumed for tuff, the labor cost is expected to be low and fall between the labor cost expected as basalt (high) and salt (low).

Underground facility costs. Assuming the conditions described above, the total (construction, operation, decommissioning) costs of the underground facilities for a tuff repository is $2.3 billion. This is 27 percent of the total cost of $8.5 billion shown in Table 7-22. The remaining $6.2 billion consists of $1.5 billion for development and evaluation, $3.6 billion for surface facilities, and $1.1 for waste packages.

Operation duration and backfilling. The tuff repository will be in operation for 58 years. This consists of a 27-year emplacement period, a 23-caretaker period, and an 8-year backfill period. The 58-year operating phase is 3 years shorter than the basalt operating period and 5 years longer than the salt operating period. This is due to the duration of the backfill period assumed for each host rock. Because of the operating period, tuff has moderate operating costs when compared with salt and basalt.

8 0 0 0 8 1 0 8 8

Operating costs. The operating cost for a repository located at the Yucca Mountain site is $5.8 billion. This is 68 percent of the total cost of $8.5 billion and is clearly the largest portion of the total facility cost. The remaining $2.7 billion consists of $1.5 billion for development and evaluation, $1.1 billion for construction, and $0.1 for decommissioning.

Most of the operating costs are associated with the operation of the surface facilities. Of the $5.8 billion total operating cost, $2.8 billion is for the operation of the surface facilities, $1.9 billion is for underground development, and $1.1 billion is for the waste packages.

Total facility costs. Table 7-25 presents the total facility costs for a tuff repository. This table summarizes the costs mentioned in this section and is consistent with the costs shown in Table 7-22.

Table 7-25. Cost estimates for a tuff repository
(billions of 1984 dollars)

Cost category	D&E	Construction	Operation	Decommissioning	Total
D & E	1.5	0.0	0.0	0.0	1.5
Surface	---	0.7	2.8	0.1	3.6
Underground	---	0.4	1.9	0.0	2.3
Waste packages	---	0.0	1.1	0.0	1.1
Total	1.5	1.1	5.8	0.1	8.5

The total-facility cost for tuff is the same as that salt and lower than that for basalt. This is due mainly to the lower underground costs that result from favorable subsurface conditions.

GLOSSARY AND LIST OF ACRONYMS AND ABBREVIATIONS

ablation	All processes by which snow and ice are lost from a glacier; also, the amount lost.
absorbed radiation	A measure of the amount of ionizing radiation deposited in a given mass of absorbing medium. The unit of absorbed radiation is the rad.
access corridor	Access to controlled roads, railroads, transmission for utilities, or other means.
accessible environment	The atmosphere, the land surface, surface water, oceans, and the portion of the lithosphere that are outside the controlled area.
Act	The Nuclear Waste Policy Act of 1982.
actinides	Chemical elements with atomic numbers beginning at 89 and continuing through 103.
active fault	A fault along which there is recurrent movement, which is usually indicated by small periodic displacements or seismic activity.
active dissolution front	See "dissolution front."
active institutional controls	Controls instituted by government to guard a repository against intrusion and to perform monitoring or maintenance operations.
adit	A nearly horizontal passage from the surface by which a mine is entered.
adsorption	Adherence of ions or molecules that are in solution to the surface of solids with which they are in contact.
aeromagnetic survey	A survey made of the magnetic field of the earth by the use of electronic magnetometers suspended from an aircraft.
affected area	Either the area of socioeconomic impact or the area of environmental impact.
affected Indian Tribe	Any Indian Tribe (1) within whose reservation boundaries a repository for radioactive waste is proposed to be located or (2) whose federally defined possessory or usage rights to other lands outside the reservation boundaries arising out of congressionally ratified treaties may be substantially and adversely affected by the locating of such a facility: provided that the Secretary of the Interior finds, upon the petition of the appropriate governmental officials of the Tribe, that such effects are both substantial and adverse to the Tribe.

affected State	Any State that (1) has been notified by the DOE in accordance with Section 116(a) of the Act as containing a potentially acceptable site; (2) contains a candidate site for site characterization or repository development; or (3) contains a site selected for repository development.
aging	Storage of radioactive materials, especially spent nuclear fuel, to permit the decay of short-lived radionuclides.
air-fall tuff	A tuff deposited showerlike from a volcanic eruption cloud.
albite	A white or colorless triclinic mineral of the feldspar group ($NaAlSi_3O_8$). It occurs commonly in igneous and metamorphic rocks.
alkaline	Having a pH greater than 7.
alluvial fan	An outspread, gently sloping mass of alluvium deposited by a stream.
alluvial piedmont	Alluvium that lies at the base of a mountain or a mountain range.
alluvium	A general term for clay, silt, sand, gravel, or similar material that is not compacted and has been deposited in fairly recent geologic time by streams, rivers, or floods.
alpha decay	A radioactive transformation in which an alpha particle is emitted by a nuclide, thus changing one nuclide to another that has a smaller atomic number and weight.
alpha particle	A positively charged particle emitted in the radioactive decay of certain nuclides. Made up of two protons and two neutrons bound together, it is identical to the nucleus of a helium atom. It is the least penetrating of the three common types of radiation--alpha, beta, and gamma.
alunite	A mineral with chemical formula, $KAl_3(SO_4)_2(OH)_6$. It usually occurs in white, gray or pink masses in hydrothermally altered feldspathic rocks. See also "feldspathic".
amorphous silica	A form of silica that lacks any ordered internal structure.
amphibole	A mineral group that includes common rock-forming minerals characterized by good prismatic cleavage.
analcime	A mineral with chemical formula: $NaAlSi_2O_6 \cdot H_2O$. It is an isometric zeolite, commonly found in alkali-rich basalts.
andesite	A dark colored, fine-grained, extrusive igneous rock.

angle of internal friction	The angle between a resultant force and the line perpendicular to the plane of friction.
anhydrite	A white to grayish or reddish mineral of anhydrous calcium sulfate, $CaSO_4$.
anoxic	A general term meaning in the absence of oxygen.
anticline	An uparched fold composed of strata that dip outward from a common ridge or axis. The core of an anticline contains stratigraphically older rocks and is convex upward.
apatite	A group of hexagonal minerals consisting of calcium phosphate together with fluorine, chlorine, hydroxyl or carbonate in varying amounts. They occur as accessory minerals in igneous rocks, metamorphic rocks, and ore-deposits.
application	The act of making a finding of compliance or noncompliance with the qualifying or disqualifying conditions specified in the siting guidelines, in accordance with the types of findings specified in Appendix III of the siting guidelines.
APPLICON	A computer-aided total graphics design system that generates contour maps, etc. from data input.
aquiclude	A geologic formation that will not transmit water fast enough to furnish an appreciable supply.
aquifer	A formation, a group of formations, or a part of a formation that contains sufficient saturated permeable material to yield sufficient quantities of water to wells and springs.
aquitard	A confining bed that retards but does not prevent the flow of water to or from an adjacent aquifer; a leaky confining bed. It does not yield water to wells or springs, but may serve as a storage unit for ground water. (See also "aquiclude.")
argillaceous	A term applied to all rocks or substances composed of clay minerals or having a notable portion of clay in their composition; examples are shale and slate.
argillite	A compact rock, derived from either mudstone or shale, that has undergone a somewhat higher degree of induration than is present in mudstone or shale.
arroyo	A term applied in the arid and semiarid southwestern U.S. to a small deep flat-floored channel or gully of an ephemeral or intermittent stream.

8 0 0 0 8 1 0 9 3

artesian	A term describing ground water confined under hydrostatic pressure. The water level in a artesian well stands above the top of the artesian water body it taps. If the water level in an artesian well stands above the land surface, the well is a flowing artesian well.
ash-flow tuff	A tuff deposited by an ash flow or gaseous cloud.
atmospheric dispersion	Atmospheric transport of particulates or gases by airflow within the atmosphere and atmospheric diffusion by random air motions.
atmospheric stability class	An index that indicates the atmosphere's ability to disperse airborne releases.
atomic energy defense activity	Any activity of the Secretary of Energy performed in whole or in part in carrying out any of the following functions: naval reactor development, weapons activities, verification and control technology, defense nuclear materials production, defense nuclear waste and materials by-products management, defense nuclear materials security and safeguards and security investigations, and defense research and development.
austenitic	Characteristic of a solid solution in iron of carbon and sometimes other solutes that occurs as a constituent of steel under certain circumstances.
backfill, backfilling	The placement of materials, originally removed or new, into the excavated areas of a mine, including waste-emplacement holes, drifts, accessways, and shafts.
background radiation	Radiation that is produced by sources such as naturally occurring radioactive minerals in the earth, cosmic rays, and naturally occurring radionuclides in living organisms.
bajada	A broad, gently inclined detrital surface extending from the base of mountain ranges out into an inland basin, formed by the lateral coalescence of a series of alluvial fans, and having an undulating character.
barrier	Any material or structure that prevents or substantially delays the movement of water or radionuclides.
basalt	A dark to medium dark igneous rock usually formed from lava flows and composed chiefly of calcic plagioclase and clinopyroxene in a glassy or fine-grained ground mass.
basalt flow	A solidified body of lava formed from the outpouring of molten basalt from a fissure or vent. (See "intraflow structures.")
base metal	Any of the more common or more chemically active metals (e.g., lead and copper).

8 0 0 0 8 1 0 9 4

basement rock	Undifferentiated rocks that underly the stratified rocks of interest in an area.
basin	A depressed area in the earth's surface with no outlet. Sediments may have accumulated in such areas.
Basin and Range province	Physiographic province in the SW U.S. characterized by a series of tilted fault blocks forming longitudinal, asymmetric ridges or mountains and broad, intervening basins.
bedding	The arrangement of rock in layers of varying thickness and character.
bedrock	Solid rock that underlies all soil, sand, clay, gravel, and loose material on the earth's surface.
benchmarking of computer codes	Code-to-code comparisons in which simulations obtained with DOE codes are compared to those obtained with other available codes of the same kind. The test cases used for benchmarking will use data representative of the actual repository setting. Benchmarking is complete when a reasonable consensus between independent code predictions is achieved.
bentonite	A clay, containing the mineral montmorillonite, that was formed over time by the alteration of volcanic ash and has variable magnesium and iron contents. Bentonite can absorb large quantities of water and expand to several times its normal volume.
berm	As used in this document, a relatively narrow, horizontal man-made shelf, ledge, or bench built along an embankment, situated partway up and breaking the continuity of a slope.
beta particle	A negatively charged particle, physically identical with the electron, that is emitted by certain radionuclides.
biological half-life	The time required for an organism to eliminate half the amount of a radionuclide ingested or inhaled.
biotite	A common rock-forming mineral of the mica group. It is black in hand specimen and brown or green in thin section, and it has perfect basal cleavage.
blind-hole drilling	A technique for sinking shafts. It uses a multiple-cone bit with a diameter larger than 6 feet.
block faulting	A type of vertical faulting in which the crust is divided into structural or fault blocks of different elevations and orientations.

8 0 0 0 8 1 0 9 5

blooie line	A pipe or flexible tube that conducts air or other gas laden with cuttings from the collar of a borehole to a point far enough removed from the drill rig to keep air around the drill dust-free.
boiling-water reactor	A nuclear reactor that uses boiling water to generate electricity.
boomtown	A community that experiences a sudden rapid growth and expansion.
borehole	An excavation, formed by drilling or digging, that is essentially cylindrical and is used for exploratory purposes.
borehole jacking test	A test that measures in situ rock-mass deformation through the application of unidirectional pressures to the opposite sides of a borehole.
borehole log	A record of the characteristics and thickness of the different layers of rock or other material encountered in the excavation of a borehole.
borosilicate glass	A silicate glass containing at least 5 percent boric acid and used to solidify commercial or defense high-level waste.
branch corridor	A corridor that runs at an angle to the main corridors of the repository and that leads to the storage rooms.
brattice	A temporary fabric curtain from directing or restricting underground ventilation flow.
breccia	Rock consisting of sharp fragments cemented together or embedded in a fine-grained matrix.
bridge plug	A downhole tool, composed primarily of slips, plug mandrell, and rubber sealing elements that is run in and set in dense, nonfractured rock in a borehole to isolate a zone. Multiple bridge plugs may be set in a borehole to isolate numerous zones.
brine	Highly saline water containing calcium (Ca), sodium (Na), potassium (K), and chlorine (Cl) and minor amounts of other elements.
brine migration	The movement of brine through interstices in rock.
broadband sound	Sound that encompasses the audible frequencies.
bulkhead	A stone, steel, wood, or concrete wall-like structure designed to resist earth or water pressure.

8 0 0 0 8 1 0 9 6

cage	The car or platform of a mine hoist used to carry men or materials.
calcine	Material heated to a temperature below its melting point to bring about loss of moisture and oxidation.
calcite	A common rock-forming mineral ($CaCO_3$) that is usually white or gray. It is the chief constituent of limestone and most marble.
caldera	A large basin-shaped volcanic depression, more or less circular.
caliche	Gravel, sand, or desert debris cemented by porous calcium carbonte; also the calcium carbonate itself.
Cambrian	The oldest of the periods of the Paleozoic Era, which lasted from 570 million to 500 million years ago.
candidate site	An area, within a geohydrologic setting, that is recommended by the Secretary of Energy under Section 112 of the Act for site characterization, approved by the President under Section 112 of the Act for characterization, or undergoing site characterization under Section 113 of the Act.
canister	A metal vessel for consolidated spent fuel or solidified high-level waste. Before emplacement in the repository, the canister will be encapsulated in a disposal container.
capable fault	A fault that has exhibited one or more of the following characteristics, as described in the NRC's 10 CFR Part 50: (a) movement at or near the ground surface at least once within the past 35,000 years or movement of a recurring nature within the past 500,000 years, (b) macroseismicity instrumentally determined with records of sufficient precision to demonstrate a direct relationship with the fault, or (c) a structural relationship to a capable fault according to characteristics a and b such that movement on one could be reasonably expected to be accompanied by movement on the other.
capillary fringe	The zone immediately above the water table in which all or some of the rock pores or fractures are filled with water that is under less than atmospheric pressure and that is continuous with the water below the water table.
caprock	Layers of insoluble mineral deposits that may be derived from the dissolution of a salt dome, "capping" the dome.
carnallite	A white, brownish, or reddish mineral, $KCl \cdot MgCl_2 \cdot 6H_2O$.

8 0 0 0 8 1 0 9 7

carbonate	A mineral compound characterized by a fundamental anionic structure of CO_3^{+2}. Calcite ($CaCO_3$) is an example of a carbonate.
casing	(1) A liner in a shaft or borehole to prevent entry of loose rock, gas, or liquid, or to prevent the loss of circulating liquid into porous, cavernous, or fractured ground. (2) The process of inserting casing into a borehole.
cask	See "shipping cask" and "transfer cask."
catchment area	As applied to an aquifer, the recharge area and all areas that contribute to it.
Cenozoic	The latest of the eras into which geologic time, as recorded by the stratified rocks of the earth's crust, is divided; this era is considered to have begun about 65 million years ago.
chronic intake	A continuous inhalation or ingestion exposure lasting for days or years.
cinder cone	A conical hill formed by the accumulation of cinders and other pyroclasts around a volcanic vent.
cladding	A long metal tube used to contain pellets of nuclear fuel; usually made of stainless steel or Zircaloy, an alloy of steel and zirconium.
cladding hulls	The empty metal casings that remain after spent fuel is removed from them for processing.
clastic rock	Any deposit that is composed of fragments of preexisting rocks or of solid products formed during the chemical weathering of such older rocks and has been transported some distance from the place of its origin.
clay	A fine-grained natural material composed mainly of hydrous aluminum silicates. It may be a mixture of clay minerals and small amounts of nonclay materials, or it may be predominantly one clay mineral. The type of clay is determined by the predominant clay mineral (i.e., kaolin, montmorillonite, illite, halloysite, etc.).
clinoptilolite	A relatively common zeolite mineral associated with other zeolites; is also a widespread alteration product of intermediate to acid volcanic glass and occurs as a mineral in sedimentary rocks, especially tuffaceous sandstones. It is a potassium-rich variety of the mineral heulandite and is commonly white.

8 0 0 0 8 1 0 9 8

clinopyroxene	Any of the group of pyroxenes crystallizing in the monoclinic system and sometimes containing considerable calcium with or without aluminum and the alkalies.
closure	Final backfilling of the remaining open operational areas of the underground repository facility and boreholes after the termination of waste emplacement, culminating in the sealing of shafts.
coefficient of friction	An experimental constant dealing with forces when two solid bodies that are in contact slide or tend to slide on each other. The constant depends largely on the roughness of the mating surfaces.
coeval	Originating or existing over the same period of time.
cohesion	Shear strength of a rock not related to interparticle friction.
collapse fracture	Any rock structure resulting from the removal of support and consequent collapse by the force of gravity.
collar	The top or uppermost portion of a shaft. A concrete ring or slab around a shaft used to prevent water inflow and to support the headframe.
colloid	A suspension of finely divided particles in a liquid, gaseous, or solid substance. Suspended particles are not easily filtered out.
colluvium	A general term applied to the accumulation of loose incoherent soil and rock material at the base of a slope.
Columbia Plateau	A region of approximately 200,000 square kilometers (78,000 square miles) occupying a major part of eastern Washington, a portion of northeastern Oregon, and a small part of western Idaho. It is underlain by a flood basalt province consisting of approximately 375,000 cubic kilometers (90,000 cubic miles) of basalt; this is called the Columbia River Basalt Group.
commercial waste	Radioactive waste generated in private industrial and other nongovernment facilities--in particular, the spent fuel discharged from nuclear power reactors and the waste resulting from the reprocessing of spent fuel.
complex	In chemistry, any combination of cations with molecules or anions containing free pairs of electrons. An organic complex is a complex in which the cation is combined with an organic ligand. An inorganic complex is formed when the cation is combined with an inorganic ligand.
compressive strength	The maximum compressive stress that can be applied to a material under given conditions before failure occurs.

conceptual model	A physical description of a system devised to show property variations as based on field and laboratory measurements and best technical judgments.
confined aquifer	An underground water-bearing unit or formation with defined, relatively impermeable upper and lower boundaries. It contains confined ground water whose pressure is usually greater than atmospheric pressure throughout.
confinement	As pertains to radioactivity, the confinement of radioactive material within some specified bounds; confinement differs from containment in that there is no absolute physical barrier.
confining unit	A body of impermeable or distinctly less permeable material stratigraphically adjacent to one or more aquifers.
constitutive model	A mathematical model of a material or a process that expresses its essential quality or nature. A constitutive model is expressed by constitutive equations that mathematically express the relationship between the quantities of interest (e.g., constitutive equations establishing a linear elastic relationship between stress and strain).
contact-handled transuranic waste	Transuranic waste, usually contained in metal drums, whose surface-radiation-dose rate (less than 0.2 rem per hour) is sufficiently low to permit direct handling. Such waste does not usually require shielding other than that provided by its container.
containment	The confinement of radioactive waste within a designated boundary.
container	The metal envelope in the waste package that provides the primary containment function of the waste package and is designed to meet the containment requirements of 10 CFR Part 60.
contamination	The presence of radioactive material on the outside surfaces of a transportation vehicle, a shipping cask, repository equipment, or a waste disposal container.
continuous mining machine	A machine equipped with a rotating cutting head with picklike bits for cutting into rock and for dropping the cuttings into a collection device for loading into cars or conveyors.

8 0 0 0 8 1 1 0 0

controlled area	A surface location, to be marked by suitable monuments, extending horizontally no more than 5 kilometers in any direction from the outer boundary of the underground facility, and the underlying subsurface, which area has been committed to use as a geologic repository and from which incompatible activities would be prohibited before and after permanent closure.
conventional shaft-sinking methods	Methods employing drilling, blasting, and mucking procedures in shaft construction
cooling (spent fuel)	Storage of fuel elements after discharge from reactors, usually under water, to allow for the decay of short-lived radionuclides and hence the decrease of radioactivity and heat emission to acceptable levels. Synonymous with aging.
core (geologic)	A cylindrical section of rock, usually 5 to 10 centimeters in diameter and up to several meters in length, taken as a sample of the interval penetrated by the drill.
craton	A generally large part of the earth's crust that has attained stability and is relatively immobile.
creep	Slow deformation (alteration of form) that results from long application of a stress.
creep closure	Closure of underground openings, especially openings in salt, by plastic flow of the surrounding rock under lithostatic pressure.
cristobalite	A mineral, SiO_2, that is a high-temperature form of quartz and tridymite, and occurs as white octahedrons in acidic volcanic rocks.
critical path	Environmental exposure pathway that dominates the transport of material, from the source of emission to human receptors.
criticality	The condition of supporting a nuclear chain reaction. It occurs when the number of neutrons present in one generation cycle equals the number generated in the previous cycle.
cryptocrystalline	A texture of rock consisting of crystals that are too small to be recognized and distinguished under an ordinary microscope.
crystalline	Of or pertaining to the nature of a crystal (i.e., having a regular molecular structure).
crystalline rock	An inexact but convenient term designating igneous or metamorphic rock, as opposed to sedimentary rock.

cultural resources	Any of the various nonrenewable artifacts or other antiquities which have been made or utilized by past human cultures. By extension, sensitive areas, which exhibit past human habitation or activities, as well as any contained features or structures are included.
cumulative impact	Projected impact of a proposed facility in combination with other existing and proposed facilities and actions.
cumulative releases of radionuclides	The total number of curies of radioactivity entering the accessible environment in any 10,000-year period, normalized on the basis of radiotoxicity in accordance with 40 CFR Part 191. The peak cumulative release of radionuclides refers to the 10,000-year period during which any such release attains its maximum predicted value.
curie	A unit of radioactivity defined as the amount of a radioactive material that has an activity of 3.7×10^{10} disintegrations per second.
Darcian flow	Flow of fluids that is described by a numerical formulation of Darcy's law.
dacitic	Characteristic of a fine-grained extrusive rock with the same general composition as andesite but having a less calcic feldspar (dacite).
darcy	A unit of measurement of permeability equivalent to the passage of 1 cubic centimeter of fluid, flowing in 1 second under 1 atmosphere of pressure through a porous medium with a cross-sectional area of 1 square centimeter and a length of 1 centimeter.
dBA	A sound level in decibels measured with the A-weighting network of a sound-level meter. The A-weighting network adjusts the measurement to correspond with the frequency response of the human ear.
debris flow (geologic)	A moving mass of rock fragments, soil, and mud, with more than half the particles being larger than sand size.
decay, radioactive	(1) The process whereby radioactive materials undergo a change from one isotope, element, or state to another, releasing radiation in the process. This action ultimately results in a decrease in the number of radioactive nuclei present in the sample. (2) The spontaneous transformation of one nuclide into a different nuclide or into a different isotope of the same nuclide.
decay chain	The sequence of radioactive disintegrations in succession from one nuclide to another until a stable daughter product is reached.

8 0 0 0 8 1 1 0 2

decibel	A unit of measure, on a logarithmic scale, of the ratio of particular sound pressure to a standard reference pressure squared. The reference pressure is 20 micropascals.
decollement	Detachment structure of strata due to deformation, resulting in independent styles of deformation in the rocks above and below.
decommissioning	The permanent removal from service of surface facilities and components necessary only for preclosure operations, after repository closure, in accordance with regulatory requirements and environmental policies.
decontamination	The removal of unwanted material (especially radioactive material) from the surface of, or from within, another material.
decrepitation	The shattering of a rock mass or rock sample caused by the buildup of excessive pressures in contained fluids as a result of heating, or the action of differential thermal expansion or contraction of its heated grains.
defense waste	Radioactive waste derived from the manufacturing of nuclear weapons and the operation of naval reactors.
density log	A gamma-gamma log used to indicate the varying bulk densities of rocks penetrated in drilling by recording the amount of back-scattering of gamma rays.
denudation	The sum of the processes that result in the wearing away or the progressive lowering of the earth's surface by various natural agents, including weather, erosion, mass wasting, and transportation.
deposition	The laying down of rock-forming material by any natural agent (e.g., the mechanical settling of sediment from suspension in water).
design bases	Information that establishes boundaries for design by specifying the functions to be performed by the structure, system, or component of a facility and the values or ranges of values for controlling parameters.
design-basis event	A credible accident or natural phenomenon (e.g., earthquakes or flood) that is used to establish design bases because its consequences are the most severe of all those postulated for other credible accidents or phenomena.
design life	The period of time for which a structure, system, or component is designed to perform its intended function. The design life of the repository ends when the repository is of no further operational use, waste retrieval is no longer a concern, and closure and decommissioning begin.

detritus	Loose rock or mineral material removed directly by mechanical means or deposited at another site.
deviatoric stress	In the engineering discipline of rock mechanics, the difference between the major principal stress and the minor principal stress.
devitrification	The process by which glassy substances lose their vitreous nature and become crystalline
diagenesis	All the changes undergone by a sediment after its initial deposition, exclusive of weathering and metamorphism, or the recombination or rearrangement of a mineral into a new mineral. Also known as diagenetic alteration.
diapir	A geologic flow structure, either a dome or an anticline, in which overlying rocks have been ruptured by the flow upward of a plastic core material such as salt.
diapirism	The process by which a diapir is produced.
diastrophism	A general term for all movement of the crust produced by earth forces, including the formation of continents and ocean basins, plateaus and mountains, folds of strata, and faults.
diffusion	A solute-spreading phenomenon important only at low ground-water velocities.
dike (geologic)	A tabular body of igneous rock that cuts across the structure of adjacent rocks or cuts massive rocks.
dip	The angle at which a bed, stratum, vein, or any planar feature of rock is inclined from the horizontal. The dip is measured perpendicular to the strike of the planar feature. (See "strike.")
dip-slip fault	A fault in which the earth's displacement is parallel to the dip of the fault, and there is no horizontal component of movement parallel to the strike.
direct work force	People hired for jobs at the repository.
discharge point (or area)	In ground-water hydraulics, the point (or area) where water comes out of an aquifer onto the surface.
discontinuity (seismologic)	A surface at which seismic-wave velocities abruptly change; a boundary between the seismic layers of the earth.
dispersion	The solute-spreading or dilution phenomena caused by mechanical mixing during ground-water movement and molecular diffusion.

8 0 0 0 8 1 1 0 4

disposal	The emplacement in a repository of high-level radioactive waste, spent nuclear fuel, or other highly radioactive material with no foreseeable intent of recovery, whether or not such emplacement permits the recovery of such waste, and the isolation of such waste from the accessible environment.
disposal system	See "repository system."
disqualifying condition	A condition that, if present at a site, would eliminate that site from further consideration.
disruptive event	Any action that could breach a barrier.
dissolution	A process of chemical weathering by which minerals and rocks are dissolved in water.
dissolution front	An underground zone in which rocks or minerals are being dissolved in a fluid (more specifically, in ground water).
distribution coefficient (K_d)	The ratio of the concentration of a solute sorbed by ion-exchange substances (e.g., earth materials, particularly clays) to the concentration of the solute remaining in solution. A large distribution coefficient implies that the substance is readily sorbed and is redissolved slowly. The concentration of a material in the solid phase (i.e., rock or sediment) (moles per gram) divided by the concentration of material in the aqueous phase (moles per liter).
disturbed zone	That portion of the controlled area, excluding shafts, whose physical or chemical properties are predicted to change as a result of underground facility construction or heat generated by the emplaced radioactive waste such that the resultant change of properties could have a significant effect on the performance of a geologic repository.
dolomite	A sedimentary rock consisting mostly of the mineral magnesium calcium carbonate, $CaMg(CO_3)_2$. It is commonly found with, and is usually formed from, limestone.
dome (general)	A dome-shaped landform or rock mass; a large igneous intrusion whose surface is convex upward with sides sloping away at low but gradually increasing angles; an uplift or an anticlinal structure, either circular or elliptical, in which the rock dips gently away in all directions.
dome (salt)	A diapiric or piercement structure with a central plug that has risen through the enclosing sediments from a deep mother bed of salt.

8 0 0 0 8 1 1 0 5

dose commitment	The integrated dose that results from an intake of radioactive material when the dose is evaluated from the beginning of the intake to a later time; also used for the long-term integrated dose to which people are considered committed because radioactive material has been released to the environment.
dose equivalent (radiation)	A concept used to describe the effectiveness of a given unit of absorbed radiation dose. The unit of dose equivalent is the rem.
dose limit	The limit established by the Environmental Protection Agency or the Nuclear Regulatory Commission for the exposure of people to radiation.
dose rate	The radiation dose received per unit of time.
dosimetry	The measurement and evaluation of absorbed radiation dose or dose equivalent.
downfaulted	Rocks on the downthrown side of a fault.
downgradient	Movement of ground water from an area of higher hydraulic pressure to one of lower pressure.
downwarping	Subsidence of the earth's crust.
drag fold	A minor fold, usually one of a series, formed in an incompetent bed lying between more-competent beds, produced by movement of the competent beds in opposite directions relative to one another.
drift	In mining, a horizontal opening excavated underground. In geology, a general term for all rock material transported either by a glacier or by proglacial meltwater.
drill-and-blast mining	A method of mining in which small-diameter holes (less than 1 foot) are drilled into the rock and then loaded with explosives. The blast from the explosives breaks the rock from the face of a structure so that rock can be removed. The underground opening is expanded by repeated drilling and blasting.
drill and test	Hydrologic testing of selected rock intervals when each interval is first penetrated by a borehole. This testing takes place before a borehole is completed to its total depth.
drill hole	A cylindrical hole made by drilling, especially one made by cable tool rigs or one made to explore for valuable minerals or to obtain geologic information. Synonymous with borehole.

8 0 0 0 8 1 1 0 6

drill-stem test	A test of the productive capacity of a well when it is still full of drilling mud.
ductility	A property of a solid material that undergoes more or less plastic deformation before it ruptures.
earthquake	A sudden motion or trembling in the earth caused by the release of slowly accumulated strain.
ecosystem	An ecologic system composed of organisms and their environment.
ecotone	An ecological community of mixed vegetation formed by the overlapping of adjoining ecologic communities.
effective porosity	The amount of interconnected pore space and fracture openings available for the transmission of fluids, expressed as the ratio of the volume of interconnected pores and openings to the volume of rock.
Eh	The oxidation potential of a solution.
elastic modulus (modulus of elasticity)	A constant expressing the ratio of the unit stress or strain to the unit deformation of a material when a stress or strain is exerted on the material.
electrical resistivity	The electrical resistance per unit length of a unit cross-sectional area of a material.
emplacement	The act of emplacing radioactive waste, encapsulated in disposal containers, into a prepared hole.
employment multiplier	A figure based on the estimated ratio of the sum of indirect and direct project employment to direct project employment. It is multiplied by the expected project employment to give total direct and indirect employment.
endangered species	Any plant or animal species protected under Public Law 93-205 that is in danger of extinction throughout all or a significant portion of its range (other than species of insects determined to be pests).
engineered-barrier system	The manmade components of a disposal system designed to prevent the release of radionuclides from the underground facility or into the geohydrologic setting. It includes the radioactive waste form, radioactive-waste containers, material placed over and around such containers, any other components of the waste package, and barriers used to seal penetrations in and into the underground facility.
environmental assessment	The document required by Section 112(b)(1)(E) of the Nuclear Waste Policy Act of 1982.

8 0 0 0 8 1 1 0 7

environmental impact statement	The document required by Section 114 of the Nuclear Waste Policy Act of 1982.
eolian	Pertaining to the wind; especially said of sediment deposition by the wind, of structures like wind-formed ripple marks, or of erosion accomplished by the wind.
ephemeral drainage	A stream or portion of a stream that flows briefly in direct response to precipitation in the immediate vicinity and is dry during some or most of the year. Its channel is at all times above the water table.
epicenter (of an earthquake)	The point on the earth's surface directly above the exact subsurface location of an earthquake.
erg	A unit of energy or work equal to the work done by a force of 1 dyne acting over a distance of 1 centimeter.
erosion	The wearing-away of soil and rock by weathering, mass wasting, and the action of streams, glaciers, waves, wind, and underground water.
escarpment	A long, more or less continuous cliff or relatively steep slope that was produced by erosion or faulting and faces in one general direction, breaking the continuity of the land by separating two level or gently sloping surfaces.
evaluation	The act of carefully examining the characteristics of a site in relation to the requirements of the qualifying or disqualifying conditions specified in the siting guidelines. Evaluation includes the consideration of favorable and potentially adverse conditions.
evaporite	A sedimentary rock composed primarily of minerals from a solution that became concentrated by evaporation, especially salts deposited from a restricted or enclosed body of seawater or from the water of a salt lake.
exclusion area	The area surrounding a nuclear facility in which the licensee has the authority to control all activities, including the exclusion or removal of personnel and property from the area.
expected	Assumed to be probable or certain on the basis of existing evidence and in the absence of significant evidence to the contrary.
expected repository performance	The manner in which the repository is predicted to function, considering those conditions, processes, and events that are likely to prevail or may occur during the time period of interest.

8 0 0 0 8 1 1 0 8

exploratory shafts	Excavations into the host rock to the depth of the repository. The shafts will be large enough to allow people and test equipment to be transported from the surface to the underground excavations.
extensometer	An instrument used to measure strain.
extraction ratio	The ratio of the amount of rock removed to the total amount of rock available in a given area.
extrusive	Igneous rock that has been erupted onto the surface of the earth.
facies	The aspect, appearance, and characteristics of a rock unit, usually reflecting the conditions of its origin, especially as differentiating the rock unit from adjacent or associated units.
fallout (radioactive)	Fission and activation products produced by the above-ground detonation of a nuclear device.
far field	The portion of the geologic setting that lies beyond the near field.
fault	A fracture or zone of fractures along which there has been displacement of the sides relative to one another, parallel to the fracture or zone of fractures.
fault block	A structural unit of the earth's crust that is formed by faulting and is bounded completely or in part by faults. This structure behaves essentially as a unit during tectonic activity.
fault escarpment	See "fault scarp."
fault plane	The plane along which faulting has taken place.
fault scarp	The cliff or escarpment formed by a fault that reaches the earth's surface.
fault system	A system consisting of two or more fault sets that were formed at the same time.
faulting	The process of fracturing or displacement that produces faults.
favorable condition	A condition that, though not necessary to qualify a site, is presumed, if present, to enhance confidence that the qualifying condition of a particular siting guideline can be met.

8 0 0 0 8 1 1 0 9

feldspar	A group of abundant rock-forming minerals of the general formula $MAl(Al,Si)_3O_8$, where M is potassium, sodium, calcium, barium, rubidium, strontium, or iron. Feldspars are the most widespread of any mineral group and constitute 60 percent of the earth's crust.
feldspathic	Containing feldspar as a principal constituent.
ferromagnesian	Containing iron and magnesium.
finding	A conclusion that is reached after evaluation.
finite-element computer code	A computer code that uses the finite-element method. The finite-element method is a method of numerical analysis that divides a region of interest into discreet elements and represents the behavior of the elements with a set of simultaneous equations. Solution of the set of equations yields the behavior at discreet points within the region of interest.
fission (nuclear)	The division of the atomic nuclei into nuclides of lower mass, accompanied by the emission of gamma rays, neutrons, and significant energy.
fission product	A nuclide produced by the fission of a heavier element.
flat-jack test	Testing apparatus used for the determination of in situ stresses or rock-mass deformability.
flooding potential	Areas susceptible to flooding by precipitation-, wind-, or earthquake-induced floods (i.e., floods resulting from dam failure, river blockage or diversion, or distantly or locally generated waves) are considered to have a flooding potential.
flood plain	As defined in 10 CFR Part 60, the lowland and relatively flat areas adjoining inland and coastal waters, including the flood-prone areas of offshore islands and, at a minimum, the area that is subject to a 1-percent or greater chance of flooding in any given year.
fluvial	Of or pertaining to rivers; growing or living in a stream or river; produced by the action of a stream or river.
flux	Rate of flow over a surface (quantity per unit area per unit time).
focal-mechanism solution	A double-couple solution obtained by using the first motion of arrival of P-waves at a particular seismic-recording station.
fold (geologic)	A curve or bend of a planar structure such as rock strata or bedding planes. A fold is usually a product of deformation.

fold belt	An essentially linear region that has been subjected to folding or deformation.
formation (geologic)	The basic rock-stratigraphic unit in the local classification of rocks. It consists of a body of rock generally characterized by some degree of internal lithologic homogeneity or distinctive features.
fracture	A general term for any break or discontinuity in a rock caused by mechanical failure resulting from stress, whether or not it causes displacement on either side large enough to be visible to the unaided eye. It may be a joint, fault, or fissure caused by geological or mechanical process and can range from microscopic to macroscopic and megascopic scales.
fracture permeability	The capacity of a fracture for transmitting a fluid; it is the measure of the relative ease of fluid flow under unequal pressure.
fuel assembly	An assembly of nuclear-fuel rods. Also called "fuel element."
fuel consolidation	The removal of spent-fuel rods from an assembly and repacking in a denser array to reduce the volume per metric ton of fuel.
fuel element	See "fuel assembly."
fuel rod	A long slender, cylindrical tube of stainless steel or Zircaloy containing nuclear fuel in the form of uranium oxide fuel pellets. Also called "fuel pin."
fuel reprocessing	The process whereby spent fuel is dissolved, waste materials are removed, and reusable materials are segregated for reuse.
fugitive emissions	Emissions of any pollutant, including fugitive dust, that do not pass through a stack, chimney, vent, or a functionally equivalent opening and are generated by activities necessary for the continued operation of the source.
fumarole	A vent, usually volcanic, from which gases and vapors are emitted; it is characteristic of a late stage of volcanic activity.
gamma radiation	Electromagnetic ionizing radiation that is emitted during some types of radioactive decay processes. Gamma radiation can penetrate various thicknesses of absorbed material, depending mainly on the energy of the gamma ray and the composition of the material. Gamma radiation is mainly an external radiation hazard.

8 0 0 0 8

general siting guidelines	See "siting guidelines."
geochemistry	The study of the distribution and amounts of the chemical elements in minerals, ores, rocks, soils, water, and the atmosphere and the chemical interactions between these phases.
geochronology	The study of time in relationship to the history of the earth.
geodetic survey	A survey of a large land area in which account is taken of the shape and size of the earth and corrections are made for the earth's curvature.
geoengineering	The application of geologic data, principles, and techniques to the study of naturally occurring rock and soil materials or ground water for the purpose of ensuring that geologic factors affecting the location, planning, design, construction, operation, and maintenance of engineering structures and the development of ground-water resources are properly recognized and adequately interpreted, used, and presented for use in engineering practice.
geohydrologic setting	The system of hydrologic units that is located within a given geologic setting.
geohydrologic system	The geohydrologic units within a geologic setting, including any recharge, discharge, interconnections between units, and any natural or man-induced processes or events that could affect ground-water flow within or among those units.
geohydrologic unit	An aquifer, a confining unit, or a combination of aquifers and combining units that constitutes a framework for a reasonably distinct component of a geohydrologic system.
geologic formation	Any igneous, sedimentary, or metamorphic rock represented as a unit in geologic mapping.
geologic repository	A system, requiring licensing by the Nuclear Regulatory Commission, that is intended to be used, or may be used, for the disposal of radioactive waste in excavated geologic media. A geologic repository includes (1) the geologic-repository operations area and (2) the portion of the geologic setting that provides isolation of the radioactive waste and is located within the controlled area.
geologic-repository operations area	A radioactive-waste facility that is part of the geologic repository, including both surface and subsurface areas and facilities where waste-handling activities are conducted.

geologic setting	The geologic, hydrologic, and geochemical systems of the region in which a geologic-repository operations area is or may be located.
geologic system	The host rock or host-rock units and surrounding rocks that provide radionuclide containment and isolation.
geologic time scale	A system of subdividing geologic time, usually presented in the form of a chart showing the names of the various divisions of time, stratigraphy, or rock as currently understood.
geomechanics	The branch of geology that deals with the response of earth materials to deformational forces and embraces the fundamentals of structural geology.
geomorphic processes	Geologic processes that are responsible for the general configuration of the earth's surface, including the development of present landforms and their relationships to underlying structures, and processes that are responsible for the geologic changes recorded by these surface features.
geomorphology	The branch of geology that deals with the general configuration of the earth's surface; specifically, the study of the classification, description, nature, origin, and development of landforms.
geophone	See "seismometer."
geophysical	Pertaining to the properties of the earth related to its structure, composition, and development.
geophysical anomaly	An area or restricted portion of information derived from a geophysical survey that is different in appearance from the general pattern of information.
geophysical log	A graphic record of the measured or computed physical characteristics of the rock section encountered in a well, plotted as a continuous function of depth.
geophysical survey	The use of one or more geophysical techniques, such as earth current, electrical, gravity, magnetic, or seismic surveys, to gather information on subsurface geology.
geosyncline	A large, generally linear trough that deeply subsided over a long period of time and in which a thick sequence of stratified sediments accumulated.
geotechnical	Pertaining to the application of scientific methods and engineering principles to the acquisition, interpretation, and use of knowledge of the materials of the earth's crust.

8 0 0 0 8 1 1 1 3

geothermal gradient	The rate of increase in temperature of the earth with depth. The average geothermal gradient in the earth's crust is approximately 25°C per kilometer of depth.
geotransport	Movement of radionuclides through subsurface soils and rocks, especially the movement of radionuclides in ground water. Used in contrast to "biotransport."
gouge	The clay or clayey material in a fault zone. Also crushed rock along a fault slip.
gneiss	A foliated rock formed by regional metamorphism, in which bands of granular materials alternate with bands of minerals with elongate prismatic habit.
graben	A usually elongated depression of the earth's crust between two parallel faults.
granite	A medium- to coarse-grained intrusive igneous rock consisting primarily of feldspar and quartz.
granite wash	A drillers' term for material eroded from outcrops of granite rock and redeposited to form rock having approximately the same major mineral constituents as the original rock.
grants equal to taxes	Grants made by the Secretary of Energy to each State and unit of general local government in which a site for a repository is approved equal to the amount such State and unit of general local government, respectively, would receive were they authorized to tax site characterization activities at such site, and the development and operation of such repository, as such State and unit of general local government tax and other real property and industrial activities occurring within such State and unit of general local government.
gravity survey	Measurements of the earth's gravitational field at a series of different locations. The purpose is to associate gravitational variations with differences in the distribution or densities of rock and hence rock types.
Great Basin	A subdivision of the Basin and Range province, located in southern Nevada in a broad desert region. The Yucca Mountain site is in the Great Basin.
ground magnetic survey	A determination of the magnetic field at the surface of the earth by means of ground-based instruments.
ground motion	The displacement of the ground due to the passage of elastic waves arising from earthquakes, explosions, seismic shots, and the like.

8 0 0 0 8 1 1 1 4

ground water	Water that occurs beneath the water table in soils and in geologic formations that are fully saturated.
ground-water basin	An underground structure with the character of a basin with respect to the collection, retention, and outflow of water.
ground-water flux	The rate of ground-water flow per unit area of porous or fractured media, measured perpendicular to the direction of flow.
ground-water recharge rate	The rate at which water is absorbed by the ground and later added to the zone of saturation.
ground-water residence time	The time that ground water remains in an aquifer or aquifer system.
ground-water sources	Aquifers that have been or could be economically developed as sources of ground water in the foreseeable future.
ground-water travel time	The time required for a unit volume of ground water to travel between two locations. The travel time is the length of the flow path divided by the velocity, where velocity is the average ground-water flux passing through the cross-sectional area of the geologic medium through which flow occurs, perpendicular to the direction of flow, divided by the effective porosity along the flow path. If discrete segments of the flow path have different hydrologic properties, the total travel time will be the sum of the travel times for each discrete segment.
grout	A mortar or cement-and-water mixture that is used to seal the walls of boreholes and shafts.
guidelines	See "siting guidelines."
Gulf interior region of the Gulf Coastal Plain	A region in northeastern Texas, northern Louisiana, and south-central Mississippi containing several hundred salt domes. Also called the "Gulf Coastal salt-dome basin" or simply the "Gulf interior region." The Richton Dome site is located in this region.
half-life	The time it takes for one-half of the radioactive atoms initially present in a sample to decay. Each radionuclide has a characteristic but constant half-life. (See also "biological half-life.")
hanging wall	The overlying side of a fault or other structure.
halite	Rock salt, which consists of sodium chloride (NaCl).

Hanford Site	A DOE reservation covering nearly 600 square miles in south-central Washington. A portion of this reservation has been identified as a potentially acceptable site in basalt and is called the "Hanford site" or the "reference repository location."
head, hydraulic	See "hydraulic potential" or "hydraulic head."
headframe	The steel or timber frame at the top of a shaft that supports the sheave or pulley for the hoisting cables and serves other purposes.
heat emission	For the purpose of establishing waste-package acceptance criteria, the total amount of heat dissipated from a package of radioactive waste.
heavy metal	All uranium, plutonium, or thorium placed into a nuclear reactor.
high-level radioactive waste	The highly radioactive material resulting from the reprocessing of spent nuclear fuel, including liquid waste produced directly in reprocessing and any solid material derived from such liquid waste that contains fission products in sufficient concentrations; other highly radioactive material that the Nuclear Regulatory Commission, consistent with existing law, determines by rule to require permanent isolation.
High Plains aquifer	An unconfined aquifer consisting of the Ogallala Formation and the Dockum Group. It is the uppermost of the three major hydrogeologic units beneath the Southern High Plains.
highly populated area	Any incorporated place (recognized by the decennial reports of the U.S. Bureau of the Census) of 2,500 or more persons, or any census-designated place (as defined and delineated by the Bureau) of 2,500 or more persons, unless it can be demonstrated that any such place has a lower population density than the mean value for the continental United States. Counties or county equivalents, whether incorporated or not, are specifically excluded from the definition of "place" as used herein.
historical seismicity	Earthquakes that occurred during recorded history, including those reported before the existence of seismographs (preinstrumental) and those recorded by seismographs (instrumental).
Holocene	An epoch of the Quaternary Period, from the end of the Pleistocene to the present.
Hooke's law	In elastic deformation, the strain is linearly proportional to the applied stress.

8 0 0 0 8 1 1 1 6

horizon	(1) In geology, a given definite position or interval in the stratigraphic column. (2) In this document, a specific underground level or elevation.
host rock	The rock in which the radioactive waste will be emplaced; specifically, the geologic materials that will directly encompass and will be in close proximity to the underground repository.
hot cell	A highly shielded compartment in which highly radioactive material can be handled, generally by remote control.
hundred-year storm	A storm whose intensity is such, on a statistical basis, that it is expected to recur only once every 100 years.
hydraulic conductivity	The rate of water flow through a given cross section of rock in a unit time under a unit hydraulic gradient measured perpendicular to the direction of flow. Synonymous with the ease of ground-water movement.
hydraulic gradient	A change in the static pressure of ground water, expressed in terms of the height of water above a datum per unit of distance in a given direction.
hydraulic head	The height above sea level to which a column of water can be supported by the static pressure at that point. The total hydraulic head is the sum of elevation head, pressure head, and velocity head.
hydraulics	An engineering discipline that deals with the statics and dynamics of fluids.
hydrogeologic unit	Any soil or rock unit or subsurface zone that affects the storage or movement of ground water by its porosity or permeability.
hydrograph	A graph showing stage, flow, velocity, or other characteristics of water with respect to time.
hydrologic modeling	The process of using a mathematical representation of a hydrologic system (as embodied in a computer code) to predict the flow of ground water.
hydrologic process	Any hydrologic phenomenon that exhibits a continuous change in time, whether slow or rapid.
hydrologic properties	The properties of a rock that govern the entrance of water and the capacity to hold, transmit, and deliver water, such as porosity, effective porosity, specific retention, permeability, and the directions of maximum and minimum permeabilities.
hydrologic regime	The distribution, characteristics, and interrelationships of the aqueous components of the geologic environment.

8 0 0 0 8 1 1 1 7

hydrologic transport	Transport of solutes through a geologic medium caused by the movement of ground water.
hydrology	The study of global water and its properties, circulation, and distribution, from the time it falls as rain water until it is returned to the atmosphere through evapotranspiration or flows into the ocean.
hydrostatic pressure	The pressure exerted by the water at any given point in a body of water that is at rest.
hydrostratigraphic unit	A term used for a body of rock having considerable lateral extent and composing a geologic framework for a reasonably distinct hydrologic system.
hydrothermal	An adjective applied to heated or hot solutions, to the processes with which these solutions are associated, and to the rocks, ore deposits, and alteration products produced by these solutions.
hydrothermal alteration	Alteration of rocks or minerals by the reaction of heated water with preexisting solid phases.
hydrothermal reactions	The reaction of materials under aqueous conditions at elevated temperatures and pressures. A component of hydrothermal test mixtures is usually the host rock, but such mixtures may contain any or all waste package components.
hydrovolcanic	Refers to explosive volcanic activity which occurs when magma or magma-generated heat encounters surface waters or ground water.
Hypalon	Brand name for an impermeable synthetic fabric manufactured by DuPont.
hypocenter	The focus or specific point at which initial rupture occurs in an earthquake.
igneous activity	The emplacement (intrusion) of molten rock (magma) into material in the earth's crust or the expulsion (intrusion) of such material onto the earth's surface or into its atmosphere or surface water.
igneous rock	A rock that solidified from molten or partly molten material (i.e., from a magma). Igneous rock is one of the three main classes into which rocks are divided, the others being metamorphic rock and sedimentary rock.
ilmenite	An iron-black opaque rhombohedral mineral with formula, $FeTiO_3$. It is a common accessory mineral in basic igneous rocks and is also concentrated in mineral sands.

immobilization	Treatment or emplacement of wastes to impede the movement of their radionuclides.
important to safety	The engineered structures, systems, and components essential to the prevention or mitigation of any accident that could result in a radiation dose to the whole body or an organ of 0.5 rem or more at or beyond the nearest boundary of the controlled area at any time until the completion of permanent closure.
impoundment	The process of forming a lake or pond by a dam, dike, or other barrier; also, the body of water so formed.
indirect employment multiplier	Figure based on the estimated ratio of project employment to the local employment resulting from both the project and project employees with their families purchasing goods and services in the area. It is multiplied by the project employment to give indirect employment growth.
indirect work force	People hired for jobs that are available because of the repository location but not at its facilities; for example, jobs with repository suppliers, town services, or retail business.
induration	The hardening of rock material by heat, pressure, or the introduction of some cementing material.
in-migrants	Workers and their families relocating permanently or temporarily to the vicinity of the site. During construction and operation, these workers and their families are considered to be in-migrants for as long as they are present.
in-migration	Moving into a region or a community, especially as part of a large-scale and continuing movement of population.
in-migration model	The analytical or mathematical representation or quantification of in-migration.
in situ	In its natural or original position. The phrase distinguishes in-place experiments, rock properties, and the like from those conducted or measured in the laboratory.
in situ stress	The magnitude and state of ground stress in a rock mass. The inherent stress in a rock mass at depth.
in situ tests	Tests that are conducted with the subject material in its original place (i.e., at the repository site and depth).
institutional controls	Administrative controls, records, physical constraints, and combinations thereof that would limit intentional or inadvertent human access to the waste emplaced in a repository.

instrumental seismicity	Earthquakes recorded on a seismograph (an instrument designed to detect and record earthquakes).
intensity (earthquake)	A measure of the effects of an earthquake on people, on structures, and on the earth's surface at a particular location; quantified by a numerical value on the modified Mercalli scale.
interbed	A bed of one kind of rock material, typically relatively thin, occurring between or alternating with beds of another kind.
intercalated	Occurring between two rock layers or within a series of layers.
interstice	An opening or space between rock materials or soil particles.
intrusive	Of or pertaining to the emplacement of magma in preexisting rock.
inversion	An atmospheric condition where a lower layer of cool air is trapped below an upper layer of warm air so that the cooler air cannot rise. Since inversions spread air horizontally, contaminating substances cannot be widely dispersed.
ion exchange	A chemical reaction in which mobile ions from a solid are exchanged for ions of like charge in a solution.
ionizing radiation	Any radiation displacing electrons from atoms or molecules, thereby producing ions (e.g., alpha, beta, and gamma radiation).
isolation	Inhibiting the transport of radioactive material so that the amounts and concentrations of this material entering the accessible environment will be kept within prescribed limits.
isolation barrier	The earth material around the underground disposal rooms; it acts to prevent radioactivity from entering the biosphere.
isopach	A line on a map drawn through points of equal thickness of a designated unit.
isopach map	A map that shows the thickness of a geologic unit throughout a geographic area by means of isopach lines at regular intervals.
isopleth	A general term for a line on a map or chart along which all points have a numerically specified constant or equal value of any given variable, element, or quantity with respect to space or time.

isotherm	A line joining data points on a map or chart having the same temperature.
joint	A surface of fracture or parting in rock, without displacement; the surface is often a plane and may occur with parallel joints to form a joint set.
K_d	See "distribution coefficient."
kinematic analysis	The analysis of displacements and strains; it is based on geometric analysis plus a number of assumptions regarding the manner in which geometrical relationships serve to indicate displacements.
L_{dn}	Day-night equivalent sound level: 24-hour equivalent sound level with a 10-dBA penalty applied for the nightime hours (10 p.m. to 7 a.m.).
L_{eq}	Energy-equivalent sound level: the average of the time-varying sound energy.
lacustrine	Pertaining to, produced by, or inhabiting a lake or lakes.
Lahontan	Pertaining to a Pleistocene lake of the Great Basin. Also a glacial stage correlative to the Wisconsin (see also "Wisconsin").
latite	A porphyritic extrusive rock with nearly equal amounts of plagioclase and potassium feldspar, little or no quartz, and a finely crystalline groundmass.
leachate	A solution obtained by leaching; for example, water that has percolated through soil containing soluble substances and thus contains certain amounts of these substances in solution.
leaching	The dissolution of soluble constituents of a solid material (e.g., the waste to be emplaced in a repository) by the action of percolating water or chemicals.
leakage	Ground-water flow across or through a rock zone of low permeability.
level 1	A specific finding on a disqualifying condition as described in Appendix III of the siting guidelines. A level 1 finding means "the evidence does <u>not</u> support a finding that the site is disqualified."
level 2	A specific finding on a disqualifying condition as described in Appendix III of the siting guidelines. A level 2 finding means "the evidence supports a finding that the site is <u>not</u> disqualified on the basis of that evidence and is <u>not</u> likely to be disqualified."

8 0 0 0 3 1 1 2 1

level 3	A specific finding on a qualifying condition as described in Appendix III of the siting guidelines. A level 3 finding means "the evidence does not support a finding that the site is not likely to meet the qualifying condition."
level 4	A specific finding on a qualifying condition as described in Appendix III of the siting guidelines. A level 4 finding means "the evidence supports a finding that the site meets the qualifying condition and is likely to continue to meet the qualifying condition."
license application	An application for a license from the Nuclear Regulatory Commission to construct a repository.
licensing	The process of obtaining the permits and authorizations required to site, construct, operate, close and decommission a repository.
lignite	A brownish-black coal in which the alteration of vegetable material has proceeded farther than in peat, but not so far as subbituminous coal.
lineament	A linear topographic feature of regional extent that is believed to reflect crustal structure. Examples are fault lines, aligned volcanoes, and straight stream courses.
linear energy transfer	A measure of the energy deposited per unit of path length.
linear expansion	The change in the length of a solid due to a change in temperature. The coefficient of linear expansion is the change in a solid's unit length per 1 degree change in temperature.
lithology	The study of rocks. Also the description of a rock on the basis of such characteristics as structure, color, mineral composition, grain size, and arrangement of its component parts.
lithophysae	Hollow bubblelike structures in rocks; composed of concentric shells of finely crystalline alkali feldspar, quartz, and other materials.
lithosphere	The solid part of the earth, including any ground water contained within it.
lithostatic pressure	The confining pressure at depth in the crust of the earth from the weight of the overlying rocks.
loess	A homogeneous unstratified deposit of windblown dust composed mainly of sand and silt.

log	A record that shows the character of rock being drilled, the drilling process, the drilling tools used, mud weight and condition, personnel on duty, and any pertinent or unusual events occurring during the drilling.
logging	Recording observations, conditions, activities, or measurements.
low-level transuranic waste	See "contact-handled transuranic waste."
low-level waste	Radioactive material that is not high-level radioactive waste, spent nuclear fuel, transuranic waste, or by-product material as defined in Section 11a(2) of the Atomic Energy Act of 1954.
mafic	Said of an igneous rock composed chiefly of dark ferromagnesian minerals.
magma	Naturally occurring mobile rock material, generated within the earth and capable of extrusion and intrusion, from which igneous rocks are thought to have been derived through solidification and related processes.
magnetic survey	A survey made with a magnetometer on the ground or in the air; it reveals local variations in the intensity of the magnetic field.
magnetometer	Instrument that measures the earth's magnetic field or the magnetic field of a particular rock.
magnetite	A black, isometric, strongly magnetic, opaque mineral. It constitutes an important ore of iron and is very common and widely distributed in rocks of all types.
magnetotelluric method	A geophysical surveying method that measures the natural electric and magnetic fields of the earth.
magnitude	The measure of the strength of an earthquake; related to the energy released in the form of seismic waves. Magnitude is quantified by a numerical value on the Richter scale.
man-rem	The unit of population dose. It is obtained by multiplying the average dose equivalent to a given organ or tissue (measured in rem) by the number of persons in a population.

8 0 0 0 8 1 1 2 3

maximally exposed individual	A hypothetical person who is exposed to a release of radioactivity in such a way that he receives the maximum possible individual radiation dose or dose commitment. For instance, if the release is a puff of contaminated air, the maximally exposed individual is a person at the point of the largest ground-level concentration and stays there during the whole time the contaminated-air cloud remains above. This term is not meant to imply that there really is such a person; it is used only to indicate the maximum exposure a person could receive.
maximum credible earthquake	The strongest earthquake that, considering the earthquake history and the tectonic setting of a place, could be reasonably expected to occur during the preclosure and postclosure phases of a repository.
maximum drawdown	The greatest lowering of the water table or potentiometric surface caused by pumping (or artesian flow).
maximum individual dose	The highest radiation dose delivered to the whole body or to an organ that a person can receive from a release of radioactivity. The hypothetical person who receives this dose, the maximally exposed individual, is one whose location, activities, and habits maximize the dose.
maximum permissible concentration	The average concentration of a radionuclide in air or water to which a worker or member of the general population may be continuously exposed without exceeding regulatory limits on external or internal radiation doses.
member of the public	Any individual who is not engaged in operations involving the management, storage, and disposal of radioactive waste. A worker so engaged is a member of the public except when on duty at the geologic-repository operations area.
Mercalli intensity	A scale for measuring earthquake intensity in terms of the effects perceived by people.
mesostasis	The last-formed interstitial material of an igneous rock.
Mesozoic	An era of geologic time, from the end of the Paleozoic to the beginning of the Cenozoic, or from about 225 million to about 65 million years ago.
metamorphic rock	All rocks that were formed in the solid state in response to pronounced changes in temperature, pressure, and chemical environment--changes that take place, in general, below the surface zones of weathering and cementation.

8 0 0 0 8 1 1 2 4

metamorphism (geologic)	The mineralogical, chemical, and structural adjustment of solid rocks to physical and chemical conditions imposed at depth below the surface zones of weathering and cementation, which differ from the conditions under which the rocks originated.
metasedimentary	Sedimentary rocks altered by the effects of heat or pressure or both.
meteorological monitoring station	A tower containing instruments to measure wind speed, wind direction, temperature at different heights, dew point, etc.
mica	A group of minerals consisting of complex silicates with perfect basal cleavage; they split into thin elastic laminae and range from colorless to black.
microearthquake	An earthquake that is not felt or has a magnitude of less than 3 on the Richter scale. Also called "microseism."
millidarcy	A unit of measurement of fluid permeability equivalent to 0.001 darcy.
millirem	1 millirem is 1/1,000 of a rem.
mined geologic disposal system	See "repository system."
mineral	A naturally occurring inorganic element or compound with an orderly internal structure and a characteristic chemical composition, crystal form, and physical properties.
mineralogy	The study of minerals. Also the formation, occurrence, properties, and composition of the minerals that make up a rock.
Miocene	An epoch of geologic time in the Tertiary Period, after the Oligocene Epoch and before the Pliocene Epoch.
mitigation	(1) Avoiding the impact altogether by not taking a certain action or parts of an action. (2) Minimizing impacts by limiting the degree or magnitude of the action and its implementation. (3) Rectifying the impact by repairing, rehabilitating, or restoring the affected environment. (4) Reducing or eliminating the impact over time by preservation and maintenance operations during the life of the action. (5) Compensating for the impact by replacing or providing substitute resources or environments.
mixing height (or depth)	The height above the surface of the earth defining a layer where vigorous vertical mixing of air occurs; this mixing layer represents the vertical extent to which pollutants can be mixed in the atmosphere.

modal analysis	The analysis of the actual mineral composition of a rock, usually expressed in weight or volume percentage. See "conceptual model," "tectonic model."
model	A conceptual description and the associated mathematical representation of a system, component, or condition. It is used to predict changes in the system, component, or condition in response to internal or external stimuli as well as changes over time and space. An example is a hydrologic model to predict ground-water travel or radionuclide transport from the waste-emplacement area to the accessible environment.
modeling, hydrologic	See "hydrologic modeling."
monitoring	Routine measuring of the quantity and type of radionuclide releases from a waste-management facility or measuring of the changes in the physical, chemical, or biological characteristics of the site and the surrounding area.
modified Mercalli scale	An earthquake-intensity scale with 12 divisions ranging from I (not felt by people) to XII (damage nearly total); commonly abbreviated MM.
modulus of deformation	A term used for materials that deform in a manner other than according to Hooke's law; also called "modulus of elasticity" (see "Hooke's law").
modulus of elasticity	See "elastic modulus."
monolithic structure	A structure formed or composed of rock material without joints or seams.
moraine	A mound, ridge, or other accumulation of unsorted, unstratified rock material left at the margins of a retreating glacier.
mordenite	One of the zeolite minerals which generally has a sodium-rich composition and is frequently associated with clinoptilolite, having essentially the same occurrence.
morphology	The study of topographic features; the form of land.
muck	Broken rock that results from mining.
mudstone	A dark-gray, fine-grained shale that decomposes into mud when exposed to the atmosphere.
multibarrier system	A system of natural and engineered barriers, operating independently or relatively independently, that acts to contain and isolate the waste.

8 0 0 0 8 1 1 2 6

multiwell aquifer test	A test to determine an aquifer's capacity; it involves adding or withdrawing measured quantities from more than one well and measuring the resulting changes in hydraulic head.
natural background radiation	See "background radiation."
natural barrier	The physical, mechanical, chemical, and hydrologic characteristics of the geologic environment that, individually and collectively, act to minimize or preclude radionuclide transport.
natural gamma log	A log of the natural radioactivity of the rocks traversed in a borehole obtained by measuring naturally emitted gamma rays.
natural system	A host rock suitable for repository construction and waste emplacement and the surrounding rock formations. Includes natural barriers that provide containment and isolation by limiting radionuclide transport through the geohydrologic environment to the biosphere and provides conditions that will minimize the potential for human interference in the future.
near field	The region where the natural geohydrologic system has been significantly perturbed by the excavation of the repository and the emplacement of the waste.
neutron log	A radioactivity log that measures the intensity of neutrons or gamma rays produced when rocks around a borehole are bombarded by neutrons from a synthetic source.
neutron probe	A probe used to measure the intensity of radiation for a neutron log.
Nevada Test Site	An area in Clark and Nye Counties in southern Nevada; it is dedicated to the underground testing of nuclear weapons.
noble gases	A group of gases that includes helium, neon, argon, krypton, xenon, and sometimes radon. Also known as inert gases, these gases have great stability and extremely low reaction rates.
nonconformity	An unconformity in which stratified rocks above the surface rest on unstratified, older rocks.
nonradiological risk	A risk from sources other than exposure to radiation.
normal fault	A fault in which the hanging wall appears to have moved downward relative to the footwall. The angle of the fault is usually 45 to 90 degrees.

9 0 0 9 1 1 2 7

occupational dose	The radiation dose received by a person in a restricted area or in performing work duties involving exposure to radiation.
operational phase	The period of time from the receipt of the first waste at the site of the repository to closure and decommissioning.
orogenic	Of or pertaining to the process of mountain formation, especially by folding of the earth's crust.
outcrop	The part of a geologic formation or structure that appears at the surface of the earth.
overburden	Loose soil, sand, gravel, or other unconsolidated material that overlies bedrock.
overcoring	A process that determines stress components in a rock mass. The process consists of drilling a small-diameter borehole and inserting deformation-sensing devices. A larger hole is then drilled concentrically with the first hole, which relieves the stress in the rock cylinder. The measured deformations are related to stresses through elastic relationships.
overthrust	A low-angle thrust fault of a large scale, with displacement generally measured in kilometers.
oxidation-reduction reaction	A chemical reaction in which one or more electrons are transferred between two or more chemical constituents of the system.
package	See "waste package."
packer	A device used in drilled holes to isolate one part of a borehole from another in order to carry out studies of particular formations or parts thereof.
packer-injection tests	A series of tests whereby a liquid (usually water) or gas is injected into a sealed off or isolated portion of a borehole or well to obtain data on formation permeability, fracture flow, and the like.
paleoclimate	A climate of the geologic past.
paleoecology	The study of the relationship between ancient organisms and their environment.
paleohydrology	The study of ancient hydrologic features preserved in rock.
paleomagnetism	The study of the natural remnant magnetization of the earth to determine the intensity and direction of the earth's magnetic field in the geologic past.

8 0 1 0 8 1 1 2 8

paleontology	The study of life of the geologic past based on fossilized plant and animal remains.
paleosol	A buried soil of the geologic past.
Paleozoic	The era of geologic time, from the end of the Precambrian to the beginning of the Mesozoic or from about 570 million to 225 million years ago.
paludal	Pertaining to a marsh or swamp.
palynology	The study of spores, pollen, and microorganisms that occur in sediments.
panel	A collection of underground rooms connected by a common access and common ventilation corridors.
Paradox Basin	A 25,900-square-kilometer (10,000-square-mile) area in southeastern Utah and southwestern Colorado; it is underlain by bedded salt and a series of salt-core anticlines. The Davis Canyon site is in the Paradox Basin.
particulates	Finely divided particles suspended in a gaseous medium, such as dust in air.
Pasco Basin	A structural and topographic basin in the western Columbia Plateau. The Hanford Site and the reference repository location are in the Pasco Basin.
passive institutional controls	(1) Permanent markers placed at a disposal site. (2) Public records or archives. (3) Federal Government ownership or control of land use. (4) Other methods of preserving knowledge about the location, design, or contents of a disposal system.
pathway	As related to waste disposal, possible or potential routes by which wastes might reach the accessible environment.
pedology	The study of the morphology, origin, and classification of soils.
perched ground water	Unconfined ground water separated from an underlying body of ground water by an unsaturated zone. Perched ground water is supported by a perching bed whose permeability is so low that water percolating downward through it is not able to bring water in the underlying unsaturated zone above atmospheric pressure.
percolate	In hydrology, the passage of a liquid through a porous substance; e.g., the movement of water, under hydrostatic pressure developed naturally underground, through the interstices and pores of the rock or soil; i.e., the slow seepage of water through soils or porous deposits.

performance assessment	Any analysis that predicts the behavior of a system or system component under a given set of constant or transient conditions. For the repository, such an analysis identifies the events and processes that might affect the disposal system, examines their effects on its barriers, and estimates the probabilities and consequences of the events.
performance confirmation	A program of test, experiments, and analyses required by the Nuclear Regulatory Commission and conducted to evaluate the accuracy and adequacy of the information used to determine reasonable assurance that the postclosure performance objectives can be met.
performance criterion	A criterion establishing qualitative operational, safety, or environmental limits.
periglacial	Pertaining to the areas, conditions, processes, and deposits marginal to an ice sheet or glacier.
permanent closure	See "closure."
permeability	The capacity of a medium like rock, sediment, or soil to transmit ground water. Permeability depends on the size and shape of the pores in the medium and the manner in which the pores are interconnected.
Permian Basin	A region in the Central United States where, during Permian time 280 to 225 million years ago, there were many shallow seas that laid down vast beds of salt and other evaporites. The Deaf Smith site is in the Permian Basin.
permissible dose	That dose of ionizing radiation that, in light of present knowledge, carries negligible probability of causing a severe somatic injury or a genetic effect.
petrography	The branch of geology that deals with the description and systematic classification of rocks, especially igneous and metamorphic rocks and especially by the microscopic examination of thin sections.
petrology	The branch of geology that deals with the origin, occurrence, structure, and history of rocks.
pH	A measure of the acidity or alkalinity of a solution.
phenocryst	A term applied to any large, conspicuous crystal in an igneous rock.
phosphatic rock	Any rock that contains one or more phosphatic minerals, especially apatite.
photogrammetry	The science and art of obtaining reliable measurements from photographs.

8 0 0 0 8 1 1 3 0

physiography	The descriptive study of landforms as opposed to geomorphology, which is the interpretive study of land forms.
physiographic province	A region in which all parts are similar in geologic structure and climate and which consequently had a unified geomorphic history.
piezometer	A tube or pipe in which the elevation of water level can be determined. A piezometer must be sealed along its length, and it must be open to water flow at the bottom and to the atmosphere at the top.
piezometric surface	See "potentiometric surface."
pillar	A solid mass of rock left standing to support a mine roof.
plasticity	The property of a material that enables it to undergo permanent deformation without appreciable volume change or elastic rebound without rupture.
plate bearing test	A procedure performed in small tunnels or adits to measure the deformation characteristics of a rock mass.
platform	A general term for any level or nearly level surface under water.
playa	The lowest central portion of an arid basin that is dry and totally barren most of the time, but is occasionally flooded. Clay and silt are the principal constituents, often resulting from lakes formed in Pleistocene time.
Pleistocene	The first epoch before the Holocene of the Quaternary Period.
Pliocene	The latest epoch of geologic time in the Tertiary Period, preceded by the Miocene Epoch and followed by the Pleistocene Epoch.
plug (geologic)	(1) The vertical pipe-like magnetic body representing the conduit of a former volcanic vent. (2) A crater filling of lava, the surrounding material of which has been removed by erosion. (3) A mass of clay, sand, or other sediment filling the part of a stream channel abandoned by the formation of a cutoff.
plug (shaft or borehole)	A watertight seal in a shaft formed by removing the lining and inserting a concrete and/or metal dam, or by placing a plug of clay over ordinary debris used to fill the shaft up to the location of the plug.

8 0 0 0 8 1 1 3 1

pluvial	Said of a geologic episode, change, process, deposit, or feature resulting from the action or effects of rain. Also said of a climate characterized by relatively high amounts of precipitation. More broadly, pertaining to rain or other form of precipitation.
point source	A source of effluents small enough to be treated as if it were a point.
poison	Any material that has a high neutron-absorption cross section and, by absorbing neutrons unproductively, removes them from the fission chain reaction, thus decreasing the radioactivity.
Poisson's ratio	The ratio of the lateral unit strain to the longitudinal unit strain in a body that has been stressed longitudinally within its elastic limit.
population center	A densely populated area of 25,000 or more inhabitants.
population dose	The sum of the radiation doses received by the individual members of a population exposed to a particular source or event. It is expressed in units of man-rem.
pore	Any small open space, generally one that admits the passage or absorption of liquid, within the rock or soil.
porosity	The ratio of the total volume of interstices in rock or soil to its total volume, usually expressed as a percentage.
porosity log	A record of pore volume per unit volume of formation; it is made from a sonic log, density log, neutron log, or resistivity log.
porphyritic	A texture of igneous rock in which large crystals are set in a finer groundmass that may be crystalline or glassy or both.
postclosure	Of or pertaining to the time, conditions, or events after the closure of the repository.
potable water	Water that is safe and palatable for human use.
potentially acceptable site	Any site at which, after geologic studies and field mapping but before detailed geologic data gathering, the DOE undertakes preliminary drilling and geophysical testing for the definition of site location.
potentially adverse condition	A condition that is presumed to detract from expected system performance unless further evaluation, additional data, or the identification of compensating or mitigating factors indicates that its effect on the expected performance of the repository system is acceptable.

potentially disruptive processes and events	Natural processes and events or processes and events initiated by human activities, affecting the geologic setting that are judged to be reasonably unlikely during the period over which the intended performance objective must be achieved, but are nevertheless sufficiently credible to warrant consideration.
potentiometric surface	The surface to which water from a given aquifer will rise by hydrostatic pressure. This surface is usually represented as a contour map in which each point tells how high the water would rise in a well tapping that aquifer at that point.
Precambrian	All geologic time, and its corresponding rocks, that elapsed before the beginning of the Paleozoic era (the Paleozoic era began about 570 million years ago).
precipitation (geochemical)	The process by which mineral constituents are separated from magma or from a solution by evaporation to form igneous rocks.
preclosure	Of or pertaining to the time, activities, operations, and conditions before and during the closure of the repository.
pressurized water reactor	A nuclear reactor that uses pressurized water to generate electricity.
pre-waste-emplacement	Of or pertaining to geologic conditions before waste emplacement.
primary sector	The businesses that predominantly sell their goods and services to individuals and businesses outside the local economy. (See "secondary sector.")
prime farmland	Land with the best physical and chemical characteristics for producing agricultural crops with minimum use of fuel, fertilizers, pesticides, and labor and without intolerable soil erosion, as determined by the Secretary of Agriculture pursuant to the Farmland Protection Policy Act of 1982 (Public Law 97-98). Prime farmland includes land that has these characteristics and is being used to produce livestock and timber, but it excludes land already in, or committed to, urban development or water storage.
probable maximum flood	A statistical representation of the greatest flood expected ever to occur at a specific location.
probable maximum precipitation	A statistical representation of the most precipitation that can reasonably be expected in a given area.
protected area	An area encompassed by physical barriers and to which personnel access is controlled.

8 0 0 0 8 1 1 3 7

protected species	Plants and animals officially listed by the U.S. Fish and Wildlife Service. Species listed by the States as rare, threatened, or endangered are not included unless they are also on the Federal list.
pumice	A light-colored, cellular, glassy rock commonly having the composition of rhyolite.
pyroclast	An individual particle ejected during a volcanic eruption.
quadrangle (geologic)	A tract of country represented by one of a series of map sheets published by the U.S. Geological Survey.
qualified site	A site that, having been characterized, is considered to be technically suitable for a repository.
qualifying condition	A condition that must be satisfied for a site to be considered acceptable with respect to a specific siting guideline.
quality assurance	All the planned and systematic actions necessary to provide adequate confidence that a structure, system, or component is constructed to plans and specifications and will perform satisfactorily.
quality control	Quality-assurance actions that provide a means to control and measure the characteristics of an item, process, or facility to established requirements.
quartz	Crystalline silica (SiO_2); an important rock-forming mineral.
quartzite	A metamorphic rock consisting mainly of quartz grains of equal size, formed by the recrystallization of sandstone by regional or thermal metamorphism.
Quaternary faults	Faults that formed or experienced movement during the Quaternary Period.
Quaternary Period	The second part of the Cenozoic Era (after the Tertiary), beginning about 1.8 million years ago and extending to the present.
rad	The basic unit of the absorbed dose of ionizing radiation. A dose of 1 rad equals the absorption of 100 ergs of radiation energy per gram of absorbing material.
radiation (ionizing)	Particles and electromagnetic energy emitted by nuclear transformations that are capable of producing ions when interacting with matter; gamma rays and alpha and beta particles are primary examples.

8 0 0 0 3 1 1 3 4

radiation zone	An area that contains radioactive materials or radiation field in quantities significant enough to require the control of personnel entry to the area.
radioactive decay	See "decay."
radioactive material	In general, any material that spontaneously emits nuclear particles or rays from the nuclei of its atoms.
radioactive waste	High-level radioactive waste, spent nuclear fuel, and other radioactive materials that are received for emplacement in a geologic repository.
radiological risk	A risk derived from exposure to radioactive materials.
radiolysis	The decomposition (splitting) of a chemical molecule (often the water molecule) by exposure to radiation.
radiometric dating	The calculation of the age of a material by a method that is based on the decay of radionuclides that occur in the material.
radionuclide	An unstable radioactive isotope that decays toward a stable state at a characteristic rate by the emission of ionizing radiation.
radionuclide retardation	The process or processes that cause the time required for a given radionuclide to move between two locations to be greater than the ground-water-travel time because of physical and chemical interactions between the radionuclide and the geohydrologic unit through which the radionuclide travels.
rain shadow	A very dry region on the lee side of a topographic obstacle, usually a mountain range, where the rainfall is noticeably less than that on the windward side.
reasonably achievable	Mitigation measures or courses of action shown to be reasonable considering the costs and benefits in accordance with the National Environmental Policy Act of 1969. (See "as low as reasonably achievable.")
reasonably available technology	Technology which exists and has been demonstrated, or for which the results of any requisite development, demonstration, or confirmatory testing efforts before application will be available within the required time periods.
reasonably foreseeable releases	Releases of radioactive wastes to the accessible environment that are estimated to have more than one chance in 100 of occurring within 10,000 years.

8 0 0 0 8 1 1 3 5

recharge (hydrologic)	The process by which water is absorbed and added to the zone of saturation, either directly into a geologic formation, indirectly by way of another formation, or indirectly through unconsolidated sediments.
recharge area	In ground-water hydrology, the area where surface water enters an aquifer.
redox	See "oxidation-reduction reaction."
reduction (chemical)	A decrease in the oxidation state of an element or chemical compound.
redundant equipment or system	Any piece of equipment or any system that duplicates the essential function of any other piece of equipment or system and can perform the entire function regardless of the operating state of the other.
regulated area	An area to which access is limited or controlled.
regulatory agency	The government agency responsible for regulating the use of sources of radiation or radioactive materials or emissions and responsible for enforcing compliance with such regulations.
regulatory guide	One of a series of official Nuclear Regulatory Commission guides prescribing standards and recommendations for nuclear facilities.
relative porosity	The ratio of the aggregate volume of interstices in a rock or soil to its total volume. It is usually stated as a percentage.
release limit	A regulatory limit on the concentration or amount of radioactive material released to the environment; usually expressed as a radiation dose.
rem	A unit dose of ionizing radiation that has the same biological effect as 1 roentgen of x-rays; 1 rem approximately equals 1 rad for x-, gamma, or beta radiation. Thus, a rem is a unit of individual dose that allows a comparison of the effects of various radiation types as well as quantities.
remotely handled transuranic waste	Transuranic waste that requires shielding in addition to that provided by its container in order to protect people nearby.
repository	See "geologic repository."
repository closure	See "closure."

8 0 0 0 8 1 1 3 6

repository construction	All excavation and mining activities associated with the construction of shafts, shaft stations, rooms, and necessary openings in the underground facility, preparatory to radioactive-waste emplacement, as well as the construction of necessary surface facilities, but excluding site-characterization activities.
repository horizon	The horizontal plane within the host rock where the location of the repository is planned.
repository operation	All of the functions at the site leading to and involving radioactive-waste emplacement in the underground repository, including receiving, transporting, handling, emplacing, and, if necessary, retrieving the waste.
repository support facilities	All permanent facilities constructed to support site characterization and repository construction, operation, and closure, including surface structures, utility lines, roads, railroads, but excluding the underground repository.
repository system	The geologic setting at the site, the waste package, and the repository, all acting together to contain and isolate the waste.
reprocessing	See "fuel reprocessing."
residual saturation	The minimum saturation that occurs due to gravitational forces alone in the absence of recharge.
residual uncertainty	Those inherent uncertainties in data, modeling, and assumed future conditions that cannot be eliminated.
restricted area	Any area to which access is controlled by the DOE for purposes of protecting of individuals from exposure to radiation and radioactive materials before repository closure, but not including any areas used as residential quarters, although a separate room or rooms in a residential building may be set apart as a restricted area.
retention pond	An earthen structure designed to hold stormwater runoff; sometimes used to mean an evaporation pond.
retrievability	The capability to remove waste from its place of isolation in accordance with preestablished criteria for the method and the rate of removal.
retrieval	The act of intentionally removing radioactive waste before repository closure from the underground location at which the waste had been previously emplaced for disposal.
reverse fault	A fault in which the hanging wall appears to have moved upward relative to the footwall.

8 0 0 0 8 1 1 3 7

rhyolitic	Characteristic of a group of extrusive igneous rocks, generally porphyritic and exhibiting flow texture with crystals of quartz and alkali feldspar in a glassy to cryptocrystalline groundmass (rhyolite).
Richter magnitude	See "Richter scale."
Richter scale	A scale for measuring the energy released by an earthquake. It was devised in 1935 by the seismologist C. F. Richter.
rift (geologic)	A long, narrow trough of regional extent, bounded by normal faults, often associated with volcanism.
right-lateral fault	A fault, the displacement of which is right-lateral separation. In plan view, the apparent movement of the side opposite the observer is to the right.
right-lateral offset	See "right-lateral fault."
riparian	Relating to or living or located on the bank of a natural water course (e.g., a river).
risk	The product of the probability and the consequences of an event.
rock bolt	A bar, usually constructed of steel, that is anchored into predrilled holes in rock as a support device.
rock burst	A sudden yielding that occurs when a volume of rock is strained beyond its elastic limit and the accompanying failure is such that the accumulated energy is released instantaneously. A rock burst can vary from the splitting off of small slabs of rock from a mine wall to the collapse of large pillars, roofs, or other massive parts of a mine.
rock-mass quality	A description of the physical characteristics and mechanical behavior of the rock mass. Rock-mass quality classifications are applied empirically to estimate requirements for underground-excavation support and mechanical properties like the strength and deformation modulus of the rock mass.
room-and-pillar mining	A system of mining in which the rock is mined in rooms separated by pillars of undisturbed rock left for roof support.
rubble	Loose, unconsolidated rock consisting mostly of large, angular rocks intermixed with a small amount of soil or earthy material.

8 0 0 0 8 1 1 1 3 8

rulemaking	Process of formulating specific regulations governing a particular matter.
salt	The common mineral sodium chloride (NaCl) and any impurities in it.
salt creep	See "creep."
sandstone	Variously colored sedimentary rock composed mainly of sandlike quartz grains cemented by lime, silica, or other materials.
saturated zone	That part of the earth's crust beneath the water table in which all voids, large and small, are ideally filled with water under pressure greater than atmospheric.
scabland	An elevated area, underlain by flat-lying basalt flows, with a thin soil cover and sparse vegetation that is crossed by coulees.
scaling	The removal of loose rock from a newly blasted wall or roof.
scanning-transmission electron microscope	A type of electron microscope that scans with an extremely narrow beam of electrons transmitted through the sample; the detection apparatus produces an image whose brightness depends on the atomic number of the sample.
scarification	The process of breaking up and loosening the surface of a material.
scenario	A particular chain of hypothetical circumstances often used in performance analysis to model possible events.
scenario analysis	Analytical process that attempts to quantify the probabilities and consequences of a postulated sequence of events.
scouring	Erosion, especially by moving water.
screening	The process of evaluating an area on the basis of criteria or guidelines to identify places that best fulfill the criteria or guidelines.
seal	An engineered barrier to prevent radionuclide migration or the intrusion of undesirable substances.
secondary compression	The reduction in volume of sediments under constant pressure that results from changes in the internal structure of the sediments.
secondary sector	The sectors of the economy that serve local residents and businesses. (See "primary sector.")

sedimentary rock	Rock formed of sediment, especially (a) clastic rocks (e.g., conglomerates, sandstone, and shales) formed of fragments of other rock transported from their sources and deposited in water and (b) rocks formed by precipitation from solution (e.g., rock salt and gypsum) or from the secretions of organisms (e.g., most limestones).
seismic	Pertaining to, characteristic of, or produced by earthquakes or earth vibrations.
seismic reflection line	A line on the earth's surface along which a seismic reflection survey is conducted.
seismic reflection survey	A survey based on measurement of the travel times of waves that originate from an artificially produced disturbance and are reflected back to the surface at nearly vertical incidence from boundaries separating media of different elastic-wave velocities.
seismic refraction survey	A survey based on the measurement of the travel times of seismic waves that have moved nearly parallel to the bedding in high-velocity layers.
seismic survey	Seismic data gathered from an area.
seismicity	The occurrence of earthquakes or the spatial distribution of earthquake activity. Also the phenomenon of earth movement.
seismometer	An instrument that receives seismic impulses and converts them into electrical voltage or otherwise makes them evident. Also known as a geophone.
shaft	With regard to a geologic repository, the penetration of the natural isolation barrier to provide access to subsurface facility; it is usually of limited cross-sectional area compared to its depth. A more common definition is a manmade hole, either vertical or steeply inclined, that connects the surface with the underground workings of a mine or excavation. The difference between a shaft and a borehole is primarily in size and use.
shaft liner	A structural lining usually made of steel, concrete, or timber that provides safe rock support and aids in preventing ground water from entering the shaft.
shaft pillar	An undisturbed buffer zone surrounding a shaft of sufficient area, so that any possible subsidence in nearby mined areas will not disturb the integrity of the shaft facility.
shaft seal system	The devices, mechanisms, or materials used or emplaced between the shaft liner and the rock wall during operation or shaft closure to retard the flow of liquid or gas.

8 0 0 0 8 1 1 4 0

shaft station	A horizontally excavated opening of a shaft at a desired depth.
shale	A fine-grained detrital sedimentary rock formed by the compaction of clay, silt, or mud.
shear	(1) A strain that causes contiguous parts of a body to slide relative to each other in a direction parallel to their plane of contact. (2) Surfaces and zones of failure by shear or surfaces along which differential movement has taken place.
shear resistance	The internal resistance of a body to shear stress, typically including a frictional part and a part independent of friction called "cohesion." Also called "shear strength."
shear zone	A tabular zone of rock that has been crushed and brecciated by many parallel fractures due to shear strain.
sheave	A large, pulley-type wheel at the top of the headframe that carries the hoist rope.
shield rocks	Areas of exposed basement rocks in a craton commonly with a very gently convex surface, surrounded by sediment-covered platforms.
shielding	The material interposed between a source of radiation and personnel to protect against radiation exposure; commonly used shielding materials are concrete, water, and lead.
shipping cask	A large, heavily shielded vessel for transporting fuel assemblies and radioactive waste. The cask provides physical protection to the contents and radiation protection to its surroundings. Radioactive waste is transported to the repository in shipping casks.
shotcrete	Cement-based compounds sprayed onto mine surfaces to prevent erosion by air and moisture and onto rock surfaces to stabilize against minor rock falls. Also used to prevent dehydration and decrepitation.
shrub-steppe	Distinguished from a true steppe by the presence of forbes, shrubs, and a few trees in an extensive grassland area. Generally not as dry as a steppe.

8 0 0 0 8 1 1 4 1

significant source of ground water	As defined in 40 CFR Part 191, an aquifer that (1) is saturated with water having less than 10,000 milligrams per liter of total dissolved solids, (2) is within 770 meters (2,500 feet) of the land surface, (3) has a transmissivity greater than 3×10^{-5} square meter per second (200 gallons per foot per day), provided that any formation or part of a formation included within the source of ground water has a hydraulic conductivity greater than 1×10^{-6} meter per second (2 gallons per square foot per day), and (4) is capable of continuously yielding at least 1,600 liters per hour (10,000 gallons per day) to a pumped or flowing well for a period of at least a year; or an aquifer that provides the primary source of water for a community water system.
silica	A chemically resistant oxide of silicon (SiO_2).
silicification	The introduction of, or replacement by, silica, generally resulting in the formation of fine-grained quartz, chalcedony, or opal, which may fill pores and replace existing minerals.
sill (geologic)	A tabular igneous intrusion that parallels the planar structure of the surrounding rock.
silt	A sedimentary material consisting of five mineral particles intermediate in size between sand and clay.
siltstone	Stone composed of hardened stone.
sinkhole	An opening at the earth's surface caused by the collapse of rock above a solution zone where ground water has moved along a joint or fracture system and has washed out or dissolved underlying material, such as limestone.
site	A potentially acceptable site or a candidate site, as appropriate, until such time as the controlled area has been established, at which time the site and the controlled area are the same.
site characterization	Activities, whether in the laboratory or in the field, undertaken to establish the geologic conditions and the ranges of the parameters of a candidate site relevant to the location of a repository, including borings, surface excavations, excavations of exploratory shafts, limited subsurface lateral excavations and borings, and in situ testing needed to evaluate the suitability of a candidate site for the location of a repository, but not including preliminary borings and geophysical testing needed to assess whether site characterization should be undertaken.

siting	All of the exploration, testing, evaluation, and decisionmaking associated with site screening, site nomination, site recommendation, and site approval for characterization or repository development.
siting guidelines	General guidelines for siting geologic repositories; issued by the Department of Energy as 10 CFR Part 960.
slabbing	A stress-induced failure mechanism of the rock around an excavation.
slash	A mining technique in which a large-diameter drilled hole is enlarged by using the drill-and-blast method.
slickensides	Polished and smoothly striated surfaces that result from friction along a fault plane.
slip	The relative displacement of formerly adjacent points on opposite sides of a fault, measured in the fault surface.
slough	Fragments of rock material from the wall of a borehole that are washed out of the hole with the return pipeline.
sloughing	The falling of loosened rock from the roof or walls of and underground excavation.
slump (geologic)	The downward slipping of a mass of rock or unconsolidated material of any size, moving as a unit or as several subsidiary units, usually with backward rotation on a more or less horizontal axis parallel to the cliff or slope from which it descends.
slurry	A fluid mixture of water and finely divided material.
smectite	A group of expanding-lattice clay minerals. These minerals are common in soils, sedimentary rocks, and some mineral deposits and are characterized by swelling in water and extreme colloidal behavior.
solubility	The amount of substance (i.e., an element or compound) that can be dissolved in a given amount of solvent.
solute	A substance dissolved in another substance, usually the component of a solution present in the lesser amount.
sonic log	A geophysical log made by an instrument, lowered and raised in a borehole or well, that continuously records, as a function of depth, the velocity of sound waves as they travel over short distances in the adjacent rocks. The log reflects lithologic changes.

sorption	The binding, on a microscopic scale, of one substance to another, such as by adsorption or ion exchange. Here "sorption" is used for the sorption of dissolved radionuclides onto aquifer solids or waste-package materials by chemical or physical forces.
sorptive capacity	The measure of a material's ability to sorb specific constituents from a liquid as it passes through the material.
source term	The types and amounts of radionuclides that make up the source of a potential release of radioactivity.
specific activity	The measure of radioactivity as a function of mass. The unit of specific activity is curie per gram.
specification	A concise statement of a set of requirements prescribing materials, dimensions, or workmanship for something to be built or manufactured.
specific heat	The quantity of heat necessary to raise the temperature of 1 gram of a given substance 1 degree Celsius.
specific yield	The ratio of the volume of water that a given mass of saturated rock or soil will yield by gravity to the volume of that mass.
spent fuel	Nuclear fuel that has been removed from a reactor after irradiation and has not been reprocessed to recover uranium and plutonium.
spherulitic	Said of a rock composed of numerous rounded or spherical masses of needlelike crystals, radiating from a central point.
spoils	The debris or waste material from a mine. The rock and other natural materials brought up to the surface during mining. Also called "mined materials" or "mined rock."
stability, repository	The condition resulting from the nature and rates of natural processes affecting the site during the recent geologic past and the expectation that they will be relatively slow and will not significantly change during the next 10,000 years or jeopardize the isolation of the waste. As defined in 10 CFR Part 60, the nature and rates of natural processes (e.g., erosion and faulting) have been and are projected to be such that their effects will not jeopardize the isolation of the waste.
stability of rock structure	The capability of an opening at depth to retain its original shape for a length of time. Stability is related to the quality of the rock mass around the opening, including slabbing and fracture.

standard metropolitan statistical area (SMSA)	One or more contiguous counties containing at least one city of 50,000 inhabitants or more. Additional counties have to meet criteria related to metropolitan character and socioeconomic integration with the central city.
steel sets	Support beams used in mine roofs and walls.
steppe	An extensive treeless grassland area that is developing in the semiarid midlatitudes of southeastern Europe and Asia. Also used to describe similar areas in other parts of the world.
stochastic model	A model whose inputs are uncertain and whose outputs are therefore also uncertain and must be described by probability distributions.
storage coefficient	The volume of water an aquifer releases from, or takes into storage, per unit surface area of the aquifer and per unit change in head.
storativity	The volume of water released from storage in a vertical column of 1 square foot when the water table or other piezometric surface declines 1 foot. In an undefined aquifer, it is approximately equal to the specific yield.
strain	(1) Change in the shape or volume of a body as a result of stress. (2) A change in the relative configuration of the particles of a substance.
stratigraphic setting	The characteristics of the rock layers or other units in the geologic environment.
stratigraphy	The branch of geology that deals with the definition and interpretation of the rock strata, the conditions of their formation, character, arrangement, sequence, age, distribution, and especially their correlation by the use of fossils and other means of identification.
stratum	A single bed or layer of rock regardless of thickness.
stress	In a solid, the force per unit area acting on any surface within it and variously expressed as pounds or tons per square inch, or dynes or kilograms per square centimeter; also, by extension, the external pressure that creates the internal force.
strike	The direction or trend of a structural surface (e.g., a bedding or fault plane) as it intersects the horizontal.
strike-slip fault	A fault in which the net slip is horizontal or parallel to the strike of the fault (see also "dip-slip fault").
stringer	A narrow vein or irregular filament in a rock mass of different material.

8 0 0 0 8 1 1 4 5

student's t test	A standard statistical method used for hypothesis testing and normally used with a sample size of less than 30.
subsidence	Sinking or downward settling of the earth's surface, not restricted in rate, magnitude, or area involved.
subsurface facility	See "underground facility."
sump	A pit or depression serving as a drain or reservoir for liquids.
surface facilities	Repository support facilities in the restricted area.
surface water	Any waters on the surface of the earth, including fresh and salt water, ice, and snow.
surge capacity	The capacity to accommodate radioactive materials by temporary storage at the repository.
system	See "repository system."
system performance	The complete behavior of a repository system in response to the conditions, processes, and events that may affect it.
talus	Loose rock fragments of any size or shape derived from, and lying at, the base of a steep slope.
tectonic	Of, or pertaining to, the forces involved in tectonics or the resulting structures or features.
tectonic activity	Movement of the earth's crust such as uplift and subsidence and the associated folding, faulting, and seismicity.
tectonic breccia	A breccia formed as the result of crustal movements, usually developed in brittle rocks. Slickensides are commonly associated with tectonic breccia, and varying amounts of claylike gouge may be present.
tectonic features	Features such as fault gouge, faulted, and folded rock.
tectonic fractures	Fractures that may or may not have slickensides on their adjoining surfaces and are commonly associated with tectonic breccias. Includes fractures across which no measurable movement has occurred.
tectonic model	A nonnumerical, descriptive theory or concept that incorporates geological, geophysical, and geodetic data into a satisfactory explanation of the evolution of stress and strain in the earth's crust; it can be used to make estimates of future crustal processes.

8 0 0 0 8 1 1 4 6

tectonic province	A region of the earth's crust with relatively consistent structural geologic features.
tectonism	Crustal movement produced by earth forces, such as the formation of plateaus and mountain ranges; the structural behavior of an element of the earth's crust.
tectonics	A branch of geology dealing with the broad architecture of the outer part of the earth; that is, the regional assembling of structural or deformational features, a study of their mutual relations, their origin, and their evolution.
tensile strength	The ability of a material to resist a stress tending to stretch it or to pull it apart.
Tertiary	The earlier of the two geologic periods that make up the Cenozoic Era, extending from 65 million to 1.8 million years ago.
thermal conductivity	A measure of the ability of a material to conduct heat.
thermal decrepitation	The shattering of a rock mass or rock sample caused by the heat-induced buildup of excessive pressures in contained fluids.
thermal expansion	The increase in linear dimensions that occurs when materials are heated.
thermal gradient	The rate of change in temperature with distance.
thermal loading	The application of heat to a system, usually measured in watt-density. The thermal loading for a repository is the watts per acre produced by the radioactive waste in the active disposal area.
thermoluminescent dosimeter	A type of radiation measuring device that contains thermoluminescent material that emits light when subjected to heat. The amount of light emitted is directly proportional to the radiation dose absorbed by the chip.
threatened species	Any plant or animal species protected by Public Law 93-205 that is likely to become endangered in the foreseeable future throughout all or a portion of its range.
thrust fault	A fault with a dip of 45 degrees or less in which the hanging wall appears to have moved upward relative to the foot wall.
to the extent practicable	The degree to which an intended course of action is capable of being effected in a manner that is reasonable and feasible within a framework of constraints.

topography	The branch of geology dealing with the configuration of the land surface, including its relief and the position of natural and man-made features. Also used synonymously with "terrain."
tortuosity	The inverse ratio of the length of a rock specimen to the length of the equivalent path of water within it.
tracer testing	A procedure in which a soluble substance (tracer) is added to ground-water at one location and its movement to another location is observed. Tracer testing is a technique by which ground-water flow directions and velocities and other hydrologic properties of rocks can be estimated.
transfer cask	A cask that provides shielding for the waste disposal container as it is transferred from the waste-handling buildings for emplacement underground.
transgressive sea	A sea that has encroached on the land.
transmissivity	The rate at which water of the prevailing kinematic viscosity is transmitted through a unit width of an aquifer under a unit hydraulic gradient. It equals the hydraulic conductivity multiplied by the thickness of the aquifer.
transport path	A route along which radionuclides could migrate.
transuranic waste	Waste containing more than a specific concentration of alpha-emitting radionuclides (including uranium-233 and its daughter products) of long half-life and high specific radiotoxicity. This concentration is currently defined as more than 100 nanocuries per gram of waste.
transuranics	Elements with an atomic number higher than 92. They do not normally occur in nature and have to be produced artificially from uranium.
tridymite	A mineral, SiO_2. It is a high-temperature form of quartz and usually occurs as minute, tabular, white or colorless crystals or scales in cavities in acidic volcanic rocks.
tritium	A radioactive isotope of hydrogen with two neutrons and one proton in the nucleus.
tubbing	Cast-iron liner plates for shafts, fabricated to specification, that bolt together to give support to rock.
tufa	A sedimentary rock composed of calcium carbonate, formed by evaporation as an incrustation around the mouth of a spring, along a stream, or around a lake.

tuff	A rock formed of compacted volcanic ash and dust.
tuffaceous	Said of sediments containing up to 50 percent tuff.
unconfined aquifer	An aquifer containing ground water that has a water table or upper surface at atmospheric pressure.
unconformity (geologic)	A break or gap in the geologic record, such as an interruption in the normal sequence of deposition of sedimentary rocks, or a break between eroded metamorphic rocks and younger sedimentary strata.
underground facility	The underground structure and the rock required for support, including mined openings and backfill materials, but excluding shafts, boreholes, and their seals.
unit of local government	Any borough, city, county, parish, town, township, village, or other general-purpose political subdivision of a State.
unrestricted area	Any area that is not controlled for the protection of individuals from exposure to radiation and radioactive materials.
unsaturated zone	The zone between the land surface and the water table. Generally, water in this zone is under less than atmospheric pressure, and some of the voids may contain air or other gases at atmospheric pressure. Beneath flooded areas or perched-water bodies, the water pressure locally may be greater than atmospheric.
uplift (geologic)	(1) The process that results in the elevation of a portion of the earth's crust. (2) A structurally high area in the crust produced by movements that have raised or upthrust the rocks, as in a dome or an arch.
upwarping	The uplift of a regional area of the earth's crust, usually as a result of the release of isostatic pressure (e.g., the melting of an ice sheet).
urban area	As defined for use in the 1980 census, incorporated and unincorporated places of 2,500 inhabitants or more.
vadose water	Water of the zone of aeration (unsaturated zone). Also known as "suspended water."
vadose zone	The unsaturated region of soil or the zone of aeration between the ground surface and the water table.
validation of computer codes and models	A process whose objective is to ascertain that the code or model indeed reflects the behavior of the real world.

8 0 0 0 8 1 1 4 9

vent system	A group of generally parallel fissures from which lava came to the surface.
verification of computer codes and models	Testing a code with analytical solutions for idealized boundary-value problems. A computer code will be considered verified when it has been shown to solve the boundary-value problems with sufficient accuracy.
very near field	The waste package and the rock within approximately 3 feet of the waste packages emplaced in a repository.
very unlikely releases	Releases of radioactive wastes to the accessible environment that are estimated to have between one chance in 1,000 and one chance in 10,000 of occurring within 10,000 years.
vesicle	A small cavity in an igneous rock, formed by the expansion of a bubble of gas or steam during the solidification of the rock.
vitrophyre	Any porphyritic igneous rock with a glassy groundmass.
volcanic glass	Natural glass produced by the cooling of molten lava or some liquid fraction of molten lava too rapidly to permit crystallization.
volcanism	The processes by which magma and its associated gases rise into the crust and are extruded onto the earth's surface and into the atmosphere.
voucher collection	A collection of dried plant specimens usually mounted and systematically arranged for reference; a piece of supporting evidence.
vug	A cavity, often within a mineral lining of different composition from that of the surrounding rock.
waste	As used in this document, high-level radioactive waste or spent fuel.
waste canister	See "canister."
waste container	See "container."
waste form	The radioactive waste materials and any encapsulating or stabilizing matrix.
waste management	The planning, execution, and surveillance of essential functions related to the control of radioactive (and nonradioactive) waste, including treatment, solidification, packaging, transportation, initial or long-term storage, surveillance, disposal, and isolation.

waste matrix	The material that surrounds and contains the waste and to some extent protects it from being released into the surrounding rock and ground water. Only material within the canister (or drum or box) that contains the waste is considered part of the waste matrix.
waste package	The waste form and any container, shielding, packing, and other sorbent materials immediately surrounding an individual waste container.
water budget	The quantification of the amount of water entering, moving through, and leaving a flow system; sometimes called "water balance."
water flux	A stream of flowing water; flood or outflow of water.
watershed	A drainage basin.
water table	The water surface in a body of ground water at which the water pressure is atmospheric.
welded tuff	Indurated volcanic ash in which the constituent glassy shards and other fragments have become welded together, apparently while still hot and plastic after deposition. Where the distinction between nonwelded and partly welded tuff is necessary, the boundary should be placed at or close to that point where the deformation of glassy fragments becomes visible. The transition from partly to densely welded tuff is one of progressive loss of pore space accompanied by an increase in the deformation of the shards and pumiceous fragments.
wind rose	A diagram showing the distribution with direction of the frequency and the speed of the wind.
Wisconsin	Pertaining to the last definitely ascertained glacial stage of the Pleistocene epoch in North America.
worst-case analysis	An analysis based on assumptions and input data selected to yield a "worst impact" statement.
x-ray diffraction analysis	Analysis of the crystal structure of materials by passing x-rays through them and registering the diffraction (scattering) image of rays.
xenolith	An inclusion in an igneous rock to which it is not genetically related.
Young's modulus	A modulus of elasticity in tension or compression, involving a change in length.

zeolites	Any of various silicates analogous in composition to the feldspars and occurring as secondary minerals in cavities, along fractures, and on joint planes in basaltic lavas. Occur also as authigenic minerals in sedimentary rocks.
Zircaloy	An alloy whose major constituent is zirconium, used as cladding material for nuclear fuel rods.

8 0 0 0 8 1 1 1 5 2

Bibliography for Glossary Definitions

Bates, R. L. and J. A. Jackson (editors), 1984. Dictionary of Geological Terms third edition, prepared by the American Geological Institute.

Freeze, R. A. and J. A. Cherry, 1979. Groundwater, Prentice-Hall, Inc., Englewood Cliffs, N.J..

Gary, M., R. McAfee, and C. L. Wolf (editors), 1974. Glossary of Geology, prepared by the American Geological Institute.

Heath, R., 1983. Basic Ground-Water Hydrology, U.S. Geological Survey Water Supply Paper 2220.

McGraw-Hill, 1978. Dictionary of Scientific and Technical Terms, second edition.

Merriam-Webster, Inc., 1983. Webster's Ninth New Collegiate Dictionary.

U.S. Department of Energy, 1980. Final Environmental Impact Statement: Management of Commercially Generated Radioactive Waste, Volume 1.

U.S. Department of Energy, 1984. DOE Final Guidelines, Subpart A.

Van Nostrand's Scientific Encyclopedia, 1982, sixth edition.

Weast, R. C. (editor), 1977. CRC Handbook of Chemistry and Physics, 58th edition.

ACRONYMS AND ABBREVIATIONS

ACOE	Army Corps of Engineers
Act	Nuclear Waste Policy Act of 1982
AEC	Atomic Energy Commission
AISI	American Iron and Steel Institute
ALARA	as low as is reasonably achievable
ANSI	American National Standards Institute
BIA	Bureau of Indian Affairs
BLM	Bureau of Land Management (U.S. Department of the Interior)
BTU	British Thermal Unit
BWR	boiling water reactor
CBRS	Coastal Barrier Resources System
CDA	Copper Development Association
CFR	Code of Federal Regulations
CH-TRU	contact-handled transuranic waste
CHLW	commercial high-level waste
CRD	Comment Response Document
CSF	consolidated and overpacked spent fuel
CSIR	Council for Scientific and Industrial Research (S. African)
DAF	Department of the Air Force
dB	decibel
dBA	decibel (A-weighting network)
DHLW	defense high-level waste
DOA	U.S. Department of Agriculture

8 0 0 0 8 1 1 5 4

DOC	U.S. Department of Commerce
DOE	U.S. Department of Energy
DOE/NV	U.S. Department of Energy, Nevada Operations Office
DOI	U.S. Department of the Interior
DOT	U.S. Department of Transportation
DWPF	defense waste processing facility
E-MAD	Engine Maintenance, Assembly and Disassembly
EA	Environmental Assessment
EIS	Environmental Impact Statement
EPA	U.S. Environmental Protection Agency
ESD	Employment Security Department (State of Nevada)
ESF	exploratory shaft facility
FAA	Federal Aviation Authority
FASM	fuel-assembly structural material
FSAR	final safety analysis report
FWS	U.S. Fish and Wildlife Service
GETT	grants-equal-to-taxes
g	physical constant repr. the acceleration due to gravity
H-3	tritium
HAW	high-activity waste
HC	hydrocarbons
HEPA	high-efficiency particulate air
HLW	high-level waste
HMTA	Hazardous Materials Transportation Act

8 0 0 0 8 1 1 5 5

IAEA	International Atomic Energy Agency
ICC	Interstate Commerce Commission
KEV	thousands of electron volts
LET	linear energy transfer
LMFBR	liquid-metal fast breeder reactor
LWR	light water reactor
M	magnitude
MOA	Memorandum of Agreement
MPC	maximum permissible concentration
MRS	monitored retrievable storage
MTHM	metric tons of heavy metal
MTU	metric tons of uranium
NAAQS	Nevada Ambient Air Quality Standard
NAC	Nevada Administrative Code
NAFR	Nellis Air Force Range
NAS	National Academy of Sciences
NCRP	National Council on Radiation Protection and Measurements
NDCNR	Nevada Department of Conservation and Natural Resources
NDEP	Nevada Department of Environmental Protection
NDH	Nevada Department of Health
NDHPA	Nevada Division of Historic Preservation and Archaeology
NDOSH	Nevada Division of Occupational Safety and Health
NDSL	Nevada Division of State Lands
NDW	Nevada Department of Wildlife

8 0 0 0 8 1 1 5 6

NDWR	Nevada Division of Water Resources
NGI	Norges Geotekniske Institute (Norwegian Geotechnical Inst.)
NNWSI	Nevada Nuclear Waste Storage Investigations
NOAA	National Oceanic and Atmospheric Administration
NPS	National Park Service
NRC	U.S. Nuclear Regulatory Commission; National Research Council
NRDA	Nevada Research and Development Area
NRS	Nevada Revised Statutes
NSIM	Nevada State Inspector of Mines
NSR	New Source Review
NTS	Nevada Test Site
NTSO	Nevada Test Site Support Office
NWPA	Nuclear Waste Policy Act of 1982
NWSR	National Wild and Scenic River
NWTS	Nuclear Waste Terminal Storage
OCRWM	Office of Civilian Radioactive Waste Management
OCS	Office of Community Services (State of Nevada)
ONWI	Office of Nuclear Waste Isolation
PAC	potentially adverse condition
PLO	Public Land Order
PM	particulate matter
PMF	probable maximum flood
PNL	Pacific Northwest Laboratories
PPM	parts per million
PRCR	preliminary repository concepts report

8 0 0 0 8 1 1 5 7

PSD	Prevention of Significant Deterioration
PUREX	plutonium and uranium recovery through extraction
PWR	pressurized water reactor
Q	quality factor
RAD	See Glossary
RAT	radiological assistance team
REM	See Glossary
SA/V	ratio of Surface Area to Solution Volume
SARP	safety analysis report for packaging
SCP	Site Characterization Plan
SCS	Soil Conservation Service
SF	spent fuel
SHPO	Nevada State Historical Preservation Office
SIP	State Implementation Plan
SJC-WCD	San Juan County Water Conservation District
SMSA	standard metropolitan statistical area
SNGBZ	Sierra Nevada-Great Basin Boundary Zone
SPCC	Spill Prevention Control and Counter-measure Plan
SR	State Route
Supply System	Washington Public Power Supply System
SW	secondary waste
SWL	Static Water Level
TLD	thermoluminescent dosimeter
TRU	transuranic (waste)

8 0 0 0 8 1 1 5 8

TWC	Texas Water Commission
Tpt	topopah Spring Member of the Paintbrush Tuff
t	a variable, representing a time interval
UNLV	University of Nevada, Las Vegas
UNR	University of Nevada, Reno
UP	Union Pacific Railroad
USAF	U.S. Air Force
USC	U.S. Code
USFS	U.S. Forest Service
USGS	U.S. Geological Survey
USLE	universal soil-loss equation
UTF	underground test facility
UTM	Universal Transverse Mercator
UZ	unsaturated zone
VRM	visual resource management
VSP	vertical seismic profiling
WHB	waste handling building
WHPF	waste handling and packaging facility
WIPP	Waste Isolation Pilot Plant
WLM	working level month
WNP	Washington Public Power Supply System Nuclear Project
WPPSS	Washington Public Power Supply System
WSA	Wilderness Study Area
WVHLW	West Valley high-level waste

8 0 0 0 8 1 1 5 9

Appendix A

TRANSPORTATION

8 0 0 0 8 1 1 6 0

TABLE OF CONTENTS

		Page
A.1	INTRODUCTION	A-1
A.2	AGENCIES WITH JURISDICTION OVER THE TRANSPORTATION OF RADIOACTIVE WASTE	A-2
	A.2.1 Federal jurisdiction	A-2
	A.2.2 State role	A-3
A.3	PARTICIPANTS IN THE SHIPPING PROCESS	A-3
A.4	REGULATIONS RELATED TO NORMAL TRANSPORTATION	A-4
A.5	REGULATIONS RELATED TO MITIGATING THE CONSEQUENCES OF ACCIDENTS	A-4
A.6	REGULATIONS RELATED TO SAFEGUARDS	A-6
	A.6.1 Safeguards	A-6
	A.6.2 Conclusion	A-9
A.7	PACKAGINGS	A-9
	A.7.1 Packaging design, testing, and analysis	A-9
	A.7.2 Types of packaging	A-10
	A.7.2.1 Spent fuel	A-11
	A.7.2.2 Casks for defense high-level waste and West Valley high-level waste	A-11
	A.7.2.3 Casks for use from an MRS to the repository	A-16
	A.7.3 Possible future developments	A-16
	A.7.3.1 Mode-specific regulations	A-16
	A.7.3.2 Overweight truck casks	A-17
	A.7.3.3 Rod consolidation	A-17
	A.7.3.4 Advanced handling concepts	A-17
	A.7.4 Conclusions	A-17
A.8	POTENTIAL HAZARDS OF TRANSPORTATION	A-18
	A.8.1 Potential consequences to an individual exposed to a maximum extent	A-18
	A.8.1.1 Normal transport	A-18
	A.8.1.2 Accidents	A-21
	A.8.2 Potential consequence to a large population from very severe transportation accidents	A-23
	A.8.3 Risk assessment	A-25
	A.8.3.1 Outline of method for estimating population risks	A-25
	A.8.3.2 Computational models and methods for population risks	A-25
	A.8.3.3 Changes to the analytical models and methods for population risks	A-26
	A.8.3.4 Transportation scenarios evaluated for risk analysis	A-28

8 0 0 0 8 1 1 6 1

TABLE OF CONTENTS (Continued)

Page

A.8.3.5 Assumption about wastes A-30
A.8.3.6 Operational considerations for use in risk analysis A-30
A.8.3.7 Values for factors needed to calculate population risks. A-33
A.8.3.8 Results of population risk analyses A-43
A.8.3.9 Uncertainties A-59

A.9 COST ANALYSIS A-59
A.9.1 Outline of method. A-59
A.9.2 Assumptions. A-59
A.9.3 Models A-60
A.9.4 Cost estimates. A-60
A.9.5 Limitations of results A-60

A.10 BARGE TRANSPORT TO REPOSITORIES A-68

A.11 EFFECT OF A SECOND REPOSITORY ON TRANSPORTATION ESTIMATES A-72
A.11.1 Single repository analyses. A-74
A.11.2 Logic supporting the supplementary analysis A-74
A.11.3 Description of supplementary analyses A-75

A.12 CRITERIA FOR APPLYING TRANSPORTATION GUIDELINE. A-75

A.13 COMMON QUESTIONS REGARDING TRANSPORTATION A-82
A.13.1 Prenotification A-82
A.13.2 Emergency response. A-83
A.13.3 Highway routing A-84
A.13.3.1 Highway routing regulations. A-84
A.13.3.2 State and local ordinances. A-85
A.13.4 Railroads A-86
A.13.4.1 Railroad routing A-86
A.13.4.2 Rail regulations A-86
A.13.4.3 Dedicated trains A-88
A.13.5 Insurance coverage for transportation accidents A-88

References for Appendix A A-91

LIST OF FIGURES

Figure	Title	Page
A-1	Truck spent-fuel cask	A-13
A-2	Rail/barge spent-fuel cask.	A-14
A-3	DHLW truck cask	A-15
A-4	Reactors west of 100° longitude	A-74
A-5	Analysis of shipping	A-77

8 0 0 0 3 1 1 6 3

LIST OF TABLES

Table	Title	Page
A-1	Reference cask capacities	A-12
A-2	Projected maximum individual exposures from normal transport (truck spent fuel cask)	A-19
A-3	Projected maximum individual exposures from normal transport (rail spent fuel cask)	A-20
A-4	Maximum individual radiation dose estimates (rail cask accident)	A-22
A-5	50-year population dose estimates for rail cask accidents	A-24
A-6	Repository acceptance schedule	A-29
A-7	Facility receipt rates for scenario involving all reactors shipping to an MRS facility	A-31
A-8	Facility receipt rates for scenario involving eastern reactors shipping to an MRS facility	A-32
A-9	Radiological risk factors for reactors to repository/MRS	A-34
A-10	Nonradiological risk factors for reactors to repository/MRS	A-35
A-11	Radiological risk factors for shipments from the MRS facility	A-36
A-12	Non-Radiological risk factors for shipments from the MRS facility	A-37
A-13	Distance per shipment from selected reactors and the MRS facility	A-38
A-14	Distance per shipment from high-level-waste sources	A-39
A-15	Total cask-miles	A-40
A-16	Fraction of travel in population zones from reactors and the MRS facility	A-41
A-17	Fraction of travel in population zones from high-level-waste sources	A-42
A-18	Number of shipments to a repository from each reactor site (authorized system)	A-44
A-19	Number of shipments to an MRS facility from eastern and western reactor sites	A-45
A-20	Summary of cask shipments	A-47
A-21	Summary of the risks of transportation of spent fuel and high-level wastes	A-48
A-22	Summary of the risks of transportation of spent fuel and all wastes	A-49
A-23	Summary of the risks of transportation of spent fuel and all wastes	A-50
A-24	Risks of spent-fuel transportation - authorized system	A-51
A-25	Risks of high-level-waste transportation - authorized system	A-52
A-26	Risks of transporting all wastes - authorized system	A-53

8 0 0 0 8 1 1 6 4

Table	Title	Page
A-27	Transportation risks for the improved-performance system: all fuel to MRS facility, 100-T cask, spent fuel to MRS facility	A-54
A-28	Transportation risks for the improved-performance system: all fuel to MRS facility, 100-T cask, consolidated spent fuel to repository from MRS facility	A-55
A-29	Transportation risks for the improved-performance system: all fuel to MRS facility, 100-T cask, secondary waste only	A-56
A-30	Transportation risks for the improved-performance system: all fuel to MRS facility, 100-T casks, DHLW only	A-57
A-31	Transportation risks for the improved-performance system: all fuel to MRS facility, 100-T cask, total	A-58
A-32	Total transportation cost	A-61
A-33	Costs for transportation from reactors to repository	A-63
A-34	Costs for transportation with an MRS facility	A-64
A-35	Capitol and maintenance costs (million 1985)	A-65
A-36	Total transportation packaging requirements	A-66
A-37	Costs for transporting defense high-level waste and West Valley waste	A-67
A-38	Costs for transporting defense high-level waste and West Valley Waste	A-68
A-39	Reactor sites in eastern United States included in barge study	A-70
A-40	Projected latent cancers for shipments to repositories from reactors with barge access	A-71
A-41	Summary of radiological air-release consequences from spent-fuel barge accidents	A-72
A-42	Summary of radiological water-release consequences for barge accidents	A-72
A-43	Cask miles from reactors to repository sites with and without an MRS facility	A-78
A-44	Variation in cask-miles resulting from the introduction of the second repository	A-78
A-45	Criteria for applying the transportation guideline	A-79

Appendix A

TRANSPORTATION

A.1 INTRODUCTION

This appendix, which is common to all environmental assessments, presents general background information on transportation topics and issues and provides supplementary references to more-detailed sources of information. The discussions throughout the appendix are specific to the spent-fuel and high-level-waste shipments that will be made to a repository.* The agencies responsible for the regulation of radioactive-material transportation are identified, and their regulations or requirements are reviewed. The shipping casks and cask concepts that will be developed in compliance with the regulatory framework are also described. These topics are discussed in the context of protecting public health and safety against the potential hazards associated with normal transportation, accidents, and sabotage. In addition, the bases for, and the methods of, evaluating the relative transportation risk and cost for each of the sites nominated as suitable for characterization are briefly considered. Separate sections are included to consider the use of barges as an alternative mode of transportation, and to discuss how the consideration of a second repository would affect the results of a single-repository analysis. Also included is a section that describes the criteria developed to aid in the application of the siting guideline on transportation. Finally, several of the major transportation issues (routing, prenotification, emergency reponse, and liability) that have been raised by the public are discussed.

For purposes of discussion in this appendix, the following terms unique to the vocabulary of transportation are defined:

- Packaging (cask) - the assembly of components, excluding contents, that shields and contains the radioactive contents. Packaging may consist of one or more receptacles, absorbent materials, spacing structures, thermal insulation, radiation shielding, and devices for cooling or absorbing mechanical shocks.

- Package - packaging together with its contents as presented for transportation. This term is distinct from "waste package," which denotes the contents of the waste-emplacement hole in the repository.

- Normal transportation - all conditions of transportation except those that result from accidents and sabotage.

Additional lists of transportation terms that may be of interest are found in 49 CFR 171.8, 49 CFR 173.403, and 10 CFR 71.4.

---

* For convenience and brevity, the term "radioactive waste" or simply "waste" is often used to mean spent fuel or all of the waste to be accepted by the repository.

8 0 0 0 8 1 1 5 6

A 2 AGENCIES WITH JURISDICTION OVER THE TRANSPORTATION OF RADIOACTIVE WASTE

A.2.1 FEDERAL JURISDICTION

The number of Federal organizations involved in the regulation of radioactive-waste transport is large, and their responsibilities and authorities are interrelated. However, only the functions of the U.S. Department of Transportation (DOT), the U.S. Nuclear Regulatory Commission (NRC), and the U.S. Department of Energy (DOE) are discussed here because of their predominance in radioactive-materials transport. More-detailed information and information about organizations not mentioned can be found in reports by Wolff (1984) and the NRC (1977).

The DOT has regulatory responsibility for safety in the transportation of all hazardous materials, including radioactive materials. This responsibility extends to all modes of transportation that would be considered for shipping waste to the repository. Under its establishing legislation, the Department of Transportation Act of 1966, the DOT is responsible for encouraging cooperation among Federal, State, and local governments, carriers, shippers, labor, and other interested parties to achieve national transportation objectives. The regulatory and enforcement authority of the DOT over the shipments of radioactive material that are in, or may affect, interstate commerce was extended by the Hazardous Materials Transportation Act (HMTA) of 1974 to include, but not be limited to, the packaging of specified types and quantities of radioactive materials, handling, labeling, placarding, routing, and driver training.

The NRC provides supplementary regulations related to the transportation of radioactive material. Under the Atomic Energy Act of 1954, as amended, the NRC has responsibility for safety in the possession, use, and transfer (including transportation) of by-product, source, and special nuclear materials. The NRC licenses commercial entities that possess and use these materials. It also promulgates regulations applicable to NRC-licensees regarding the packagings of specified quantities of highly radioactive materials, prenotification of shipments, and the physical protection of spent-fuel shipments from acts of theft and sabotage. The DOT, by agreement with the NRC, accepts the NRC standards of 10 CFR Part 71 for packagings. This agreement has been formalized in a memorandum of understanding between the two agencies (Federal Register, Vol. 44, p. 38690, July 2, 1979). These standards are now in general agreement with international regulations. To aid in enforcement, the NRC requires its licensees to comply with DOT regulations when those entities are not otherwise subject to the DOT regulations.

The shipments of radioactive material conducted by the DOE are also subject to DOT regulations. Authority has been granted to the DOE by DOT regulations (49 CFR 173.7) to approve and certify packagings made by or under the direction of the DOE, as long as the evaluation, approval, and certification are against packaging standards equivalent to those specified in the NRC regulations in 10 CFR Part 71. Although the DOE will take title to all shipments of spent fuel and will be the shipper of record with the authority to use DOE-certified packages, a procedural agreement (Federal Register, Vol. 48, p. 51875, November 14, 1983) has been signed between the

8 0 0 0 8 1 1 6 7

NRC and the DOE; it provides that the DOE will, while making radioactive-waste shipments from NRC-licensed facilities to facilities established under the Nuclear Waste Policy Act (the Act), use NRC-certified packages. The agreement is currently limited to matters of health and safety incident to packaging.

The Act also restates the requirement that the DOE must comply with DOT regulations. A memorandum of understanding between the DOE and the DOT delineates the respective responsibilities and establishes common planning assumptions that the DOE and the DOT will observe in the implementation of transportation requirements under the Act (Federal Register, Vol. 40, p. 47421, November 18, 1985).

A.2.2 ROLE OF STATES

The States also have an important role in regulating the transportation of radioactive materials. Some States have adopted DOT regulations and apply them to intrastate shipments as well as interstate shipments. A particularly important role of the State under DOT regulations is that of designating preferred highway routes for shipments of the type of radioactive materials that would be shipped under the Act (DOT, 1984). A more complete discussion of the States' roles in highway routing is presented in Section A.13.3.1.

A.3 PARTICIPANTS IN THE SHIPPING PROCESS

Three major participants in the shipping process are subject to existing Federal regulations: the shipper, the carrier, and the receiver. The shipper is responsible for the transfer of the radioactive material even though the material may be physically transported by someone else. The shipper must identify the contents of the package, inform the carrier (the actual transporter) of the contents of the package, and must notify the States through which a shipment will pass. Also, the shipper must perform contamination and radiation-level surveys, prepare shipping papers, and certify on the shipping papers that the package is properly prepared. The shipper is instrumental in ensuring the safety of the shipment. The carrier must placard the vehicle, provide any training that may be required, prepare a route plan, and ensure that prescribed routes are followed. The receiver generally acts to support the shipper by inspecting shipments on arrival and by preparing the transportation vehicle for the return trip, ensuring that contamination levels, if any, are below regulatory limits.

The shipping participants under the Act are expected to be the DOE as the shipper of record (the responsibility of separate offices within the DOE for shipments of defense waste to a repository has not been decided upon yet), commercial transporters as the carriers, and the DOE's Office of Civilian Radioactive Waste Management (OCRWM) as the receiver.

8 0 0 0 8 1 1 6 8

A.4 REGULATIONS RELATED TO NORMAL TRANSPORTATION

The hazards of radioactive-material transportation under normal conditions are minimized by existing regulations. All radioactive materials emit penetrating radiation of varying strength and penetrating power, and shielding is provided in the packaging to reduce this radiation to low levels. Many administrative regulations have been developed to (1) identify packages that contain radioactive material and (2) limit exposures to low levels.

A package must be properly prepared and have proper markings and labels. In addition, a vehicle carrying radioactive material of the type that would be shipped to a repository must be placarded for further identification. A tamper seal is used to show that a shipment has not been opened by unauthorized personnel. Furthermore, the shipper must prepare shipping papers and driver instructions that identify the materials being transported and provide appropriate instructions for shipping.

Limits are prescribed for both temperature and radiation-dose rates. The accessible surface temperatures of packages may not exceed 82°C (180°F). Most likely, the casks for the DOE's waste-management program will be designed to ensure that the radiation-dose rates for shipments to a repository will be at the regulatory limit of 10 mrem/hr at 2 meters (6.6 feet) from the external surface of the vehicle or trailer. A radiation dose equivalent to 1 year's exposure to natural background radiation would be received in 10 to 15 hours if a person were to stand at the 2-meter (6.6-foot) distance. Although these exposures are low, the labels and placards are intended to alert the public and to prevent prolonged inadvertent contact with a shipping vehicle or package.

Since loose radioactive material may adhere to the external surface of the package or the vehicle, external contamination is also monitored to ensure that it does not reach harmful levels.

There are many other regulations that have an important effect on the safety and efficiency of radioactive-material shipments. These regulations include requirements for driver training and qualification, notifications, and safeguards. A good review of current DOT regulations can be found in a recent DOT report (DOT, 1983b). The regulations are found in 49 CFR Parts 100-179. NRC regulations are found in 10 CFR Part 71 and Part 73.

A.5 REGULATIONS RELATED TO MITIGATING THE CONSEQUENCES OF ACCIDENTS

During the period from 1971 to 1981, over 1,500 truck and rail shipments of spent fuel were completed (Newman, 1985), and only 4 accidents occurred (Emerson and McClure, 1983). Two of these accidents occurred when the casks were empty. None of the casks released radioactive material.

The packaging is the primary means of protection in the event of an accident. The stringency of regulations for packagings is related to the hazard of the radioactive contents if they were to be dispersed during an accident. For the radioactive materials that will be shipped to a repository,

8 0 0 0 8 1 1 6 9

packagings must be designed to preclude significant releases even under severe accident conditions. Under the conditions of the vast majority of accidents, packaging design will preclude entirely the release of material. This section discusses design criteria in regulations, while Section A.7 discusses proposed designs of packagings for shipments to a repository.

Among other requirements, packagings for shipments to a repository will have to survive the testing conditions identified in 10 CFR Part 71. These testing conditions have been estimated to be more severe than those encountered in at least 99.9 percent of all transportation accidents (McClure, 1981). By demonstrating the capability to survive such severe conditions, a packaging can be expected to completely contain its contents during an accident, and this has been the experience to date.

The specific tests to which the same packaging is subjected are as follows:

1. A free drop of 9 meters (30 feet) onto an unyielding target.

2. A free drop of 1 meter (40 inches) onto a puncture probe of a specified size.

3. An exposure to an engulfing thermal environment of 800°C (1,475°F) for 30 minutes.

4. An immersion under 0.9 meter (3 feet) of water for 8 hours.

5. An immersion under 15 meters (50 feet) of water for 8 hours (an undamaged packaging may be used for this test).

Information about the basis for these specific tests can be found in a report published by the International Atomic Energy Agency (IAEA, 1973).

In the first four tests, the same package must be tested in sequence and in the orientation expected to cause the most damage. The extent to which a cask survives such a test is measured by prescribed allowable leak rates and prescribed maximum exposure rates at specified distances from the surface of the package. Regulations, detailed descriptions, leak rates, and survival criteria can be found in 10 CFR 71.51(a)(2), in DOE Order 5480.1, in an NRC regulatory guide (NRC, 1975), and in a standard issued by the American National Standards Institute (ANSI, 1977).

Once a package design to be used for shipments to a repository (not all radioactive-material packages must survive accident conditions) has been demonstrated to survive the rigorous accident conditions as well as many other criteria, a certificate of compliance is issued. The certificate specifies the operating conditions under which the package may be used.

Both the regulations and the certificates can be modified to include experience that relates to the performance of packages. For example, in a recent occurrence (Klingensmith et al., 1980), damaged spent fuel became oxidized during shipment, and a serious contamination problem resulted during unloading. As a result, the NRC has modified the certificates of compliance

8 0 0 0 8 1 1 7 0

of currently certified spent-fuel casks to require that they be operated with inert atmospheres in the cask cavity. By using an inert gas in the cask cavity, the potential for fuel oxidation is substantially reduced.

Since the transportation packaging can be relied on for protecting the public during an accident, shipments can be allowed to occur in general commerce. Consequently, relatively few Federal regulations for vehicles are imposed on the carriers of radioactive materials (excluding physical protection requirements) beyond those required for the carrier of any hazardous material. Vehicle-safety conditions are addressed by other Federal and State regulations that are not specific to vehicles carrying radioactive material. For example, truck safety is governed by the Bureau of Motor Carrier Safety (49 CFR Parts 390-398), which imposes vehicle-safety and driver standards on all interstate truck carriers. Along with other functions, the Bureau conducts unannounced roadside inspections of truck carriers and drivers. During an inspection, the weight and a variety of safety considerations, including vehicle lights and brakes and driver documents, are checked. For rail shipments, similar inspection criteria and safety requirements have been promulgated by the Federal Railroad Administration in 49 CFR Parts 209-236. Regulations related to hazardous materials transportation by rail are discussed in Section A.13.4.2.

A.6 REGULATIONS RELATED TO SAFEGUARDS

An issue that has caused concern about the public risk due to radioactive-material transportation is the hazard posed by the sabotage of a radioactive-material shipment. One postulated scenario is the destruction of a loaded cask with well-placed explosives. Such an attack would be of particular concern if it were conducted in a densely populated area.

A.6.1 SAFEGUARDS

In June 1979, the NRC published regulations for the protection of commercial-spent-fuel shipments. In 1980, after reviewing public comments and assessing its own experience in administering these regulations, the NRC published amendments to the rule. The NRC further amended the rule in 1982 to include State prenotification requirements. The amended rule is currently in effect as 10 CFR 73.37(a)-(f). These regulations were promulgated to address the issue of safeguarding spent-fuel shipments against acts of terrorism and sabotage, including the possible hijacking and subsequent sabotage of such shipments. Known as physical protection or "safeguard" regulations, these security rules are distinguished from other regulations published by the NRC and other Federal agencies that deal with issues of safety affecting the environment and public health. The safeguard regulations reflected analyses conducted in the mid 1970s. In particular, an NRC-sponsored study (DuCharme et al., 1978) suggested that the sabotage of spent-fuel shipments had the potential for producing serious radiological consequences in areas of high population density. The NRC concluded that to protect public health and to minimize danger to life and property, it was prudent to require that certain safeguard measures be taken to protect spent-fuel shipments until a more

precise and scientific analysis could be performed. The study had been concerned with areas of high population density, but, because of the possibility that shipments could be hijacked in low-population areas and subsequently transported to high-population areas, the requirements applied to all shipments regardless of routing.

The NRC stated in the preamble to the rule change that it had intended the original safeguard rules to be in effect until the results of confirmatory research became available and could be analyzed. The NRC and the DOE responded to this need for more testing by sponsoring separate but coordinated experimental programs. Both programs were designed to yield information about the release of radioactive material from a specified reference sabotage event that was defined in terms of the expertise of the saboteurs, the amount of explosives used, the type of charge employed, and the characteristics of the cask. The NRC-sponsored experiments (Schmidt et al., 1982) used model (small-scale) explosives against simulated casks containing irradiated fuel. The program sponsored by the DOE (Sandoval et al., 1983) included one full-scale and several small-scale experiments.

The results of both of these latter studies showed that the likely release of respirable radioactive particles from sabotage and the resulting consequences of individuals breathing such particles are substantially smaller than the estimates made in the previous NRC-sponsored study that had prompted issuance of the original safeguard regulations. That study had predicted several tens of early fatalities and hundreds of latent-cancer fatalities from sabotage in a densely populated urban area of a truck cask containing three fuel assemblies. The subsequent DOE and NRC-sponsored research predicted no early fatalities and fewer than 15 latent-cancer fatalities for the sabotage of a three-assembly cask in a similarly populated area. These latter consequences would occur only under assumptions that are very favorable to the saboteur. Assumptions concerning the age of the spent fuel (i.e., the cooling period), population density, and the lifetime of respirable particles were all postulated at worst- or near-worst-case levels. When such assumptions are changed to more closely resemble typical or normal transportation situations, the resulting consequences are predicted to decline further.

In June 1984, the NRC published proposed amendments to its existing safeguard regulations and solicited public comment. These amendments take into account the results of the experiments sponsored by the NRC and the DOE, but continue to provide for protection against the loss of control over a shipment and the unhindered movement of the shipment by a saboteur. The objectives of both the current rule and the proposed amendments are to--

1. Deny an adversary easy access to shipment-location information.

2. Provide for early detection of hostile moves against, or the loss of control over, a shipment.

3. Provide a means to quickly summon assistance from local law-enforcement authorities.

4. Provide a means to impede the unauthorized movement of a truck shipment into a heavily populated area.

The current NRC safeguard rule requires--

1. Advance notification of each shipment to the NRC.

2. Maintenance of a communications center to continuously monitor the progress of each shipment.

3. Keeping a written log describing the shipment and significant events during the shipment.

4. Advance arrangements with local law-enforcement agencies along the route.

5. Advance route approval by the NRC.

6. Avoiding scheduled intermediate stops to the extent practicable.

7. At least one escort to maintain visual surveillance of the shipment during stops.

8. Shipment escorts to contact the communications center every 2 hours to report the status of the shipment.

9. Capability to immobilize the cab or cargo-carrying portion of a shipment transported by truck.

10. Armed escorts in heavily populated areas.

11. On-board communications equipment.

12. Advance notification to the governor of a State (or the governor's designee) of a shipment to be transported within or through his State, giving the estimated date and time of entry into the State and applicable routing information. This information must not be publicly released until 10 days after the shipment has entered or originated within the State.

All of these requirements will continue to be in effect for shipments of spent nuclear fuel that has been cooled less than 150 days because there is currently not enough information on the consequences of sabotage to this "hotter" fuel to warrant regulatory modifications.

The proposed amendments change the regulations for shipments of spent fuel cooled 150 days or more by eliminating the requirements for--

1. Maintenance of a communications center.
2. Written logs.
3. Advance arrangement with local law-enforcement agencies.
4. Contacts every 2 hours by escorts.
5. Armed escorts in cities.
6. Advance route approval by the NRC.

8 0 0 0 8 1 1 1 7 3

At present, NRC's safeguard rules apply only to NRC licensees. However, DOT regulations require that DOE-owned spent fuel be shipped under a physical-protection plan that is equivalent to NRC safeguard rules and has been approved by DOT (49 CFR 173.22(c)). DOE Order 1540.1, which covers DOE transportation regulations, is being revised and will include physical protection procedures that essentially parallel the physical-protection procedures proposed by the NRC in 1984.

When shipping commercial waste to a repository, the OCRWM will comply with whatever NRC shipment-protection requirements are in force at the time. The NRC safeguard requirements at present are limited to spent-fuel shipments. The OCRWM will work with the NRC to establish the need for, and the function of, safeguard requirements for the other radioactive waste that could be shipped under the Act.

A.6.2 CONCLUSION

Though transportation packagings have not been specifically designed to mitigate the consequences of a sabotage event, they have been shown experimentally to limit to low levels the potential adverse health consequences to the public. Predictions based on releases experimentally determined in both DOE and NRC studies indicate that no immediate radiation-induced deaths and a small number of latent-cancer fatalities would be expected even in a very densely populated area (Sandoval et al., 1983). To create the level of hazard encountered in the experiments, such sabotage attempts would have to be performed by trained experts, and precise placement of the explosives in the most vulnerable positions would be necessary.

In order to protect the health and safety of the public, the packaging of shipments made to a repository will be as strong as those used in the experimental studies.

A.7 PACKAGINGS

This section discusses the design and fabrication of transportation packagings, trends in future designs, the designs assumed for the cost and risk analysis, and possible future developments.

A.7.1 PACKAGING DESIGN, TESTING, AND ANALYSIS

Radioactive-material packagings, or casks, are designed and certified to carry specific contents. This is necessary because of the unique thermal, radiological, and criticality characteristics of the contents. Other materials can be carried in the cask only if it can be shown that they present no greater radiological, thermal, or criticality hazards than those of the certified contents. Several cask types will be used for transporting waste to a repository. Generally, the size of the package will be dictated by the mode of transportation.

8 0 0 0 3 1 1 7 4

The type of packaging to be used for shipments to a repository is required to survive the conditions of both normal transportation and accidents. Survival is determined by the extent to which the packaging contains its contents, shields against excessive levels of radiation, and prevents a nuclear chain reaction from occurring even after being subjected to the prescribed hypothetical accident conditions (see Section A.5).

A new packaging is designed through a rigorous process similar to that for other nuclear-related products. If a feasible design is proposed, the design proceeds through an engineering analysis of its survivability when subjected to the testing conditions. Physical engineering tests may be conducted during this stage to support analyses. Proof of survivability under accident conditions is required either through analysis, full-scale or model testing, or a combination of both. Once feasibility and survivability are ensured, a final design is prepared. In the design of packaging used for commerical-waste shipments to a repository, all of this effort will be performed by the cask designer for the DOE under a rigorous quality-assurance program. Once the DOE is certain that the design satisfies all requirements, a safety-analysis report for packaging (SARP) will be submitted to the NRC. This SARP will contain a description of all analyses and will be the means for transmitting all operational and safety information to the reviewer. Once the NRC is convinced that all criteria have been satisfied, it will issue a certificate of compliance.

Since packaging certification can be based on engineering analysis, without actual physical testing, it is important to have confidence that the analytical results closely represent those that might be expected to occur if a package were actually subjected to accident conditions. Several experimental programs, both reduced-scale and full-scale, have been run to produce carefully controlled accident environments that can be directly correlated with analysis (Jefferson and Yoshimura, 1978). The correlations have been reasonably close, and much confidence has been developed in analytical modeling capabilities as a reliable and cost-effective tool to replicate response to accident conditions.

A.7.2 TYPES OF PACKAGING

The analyses presented for transportation in this environmental assessment are based on the representative characteristics of a new family of casks that are expected to be used to transport spent fuel and high-level waste. These casks either are being designed now or will be designed in the future, and more accurately represent the type of packaging that will be used than do existing casks being used to transport commercial spent fuel.

As stated earlier, packagings are designed for specific contents; spent-fuel casks are no exception. The existing casks that are currently in use are designed to shield, dissipate heat, and prevent a nuclear chain reaction in spent fuel that has just come out of a reactor. Because the spent fuel to be shipped to a repository will have been out of the reactor for many years (5 years at a minimum), the existing casks are "overdesigned" for the mission. Although the expected radiation-dose rates would be much lower than those allowed by regulation, the cask payloads are also lower than optimum, thus requiring more shipments. The lower radiological risk per shipment using

8 0 0 0 3 1 1 1 7 5

existing casks would be roughly offset by the increased overall risk that would result from the increased number of required shipments.

The DOE is planning new cask designs that will increase payloads and substantially reduce the number of shipments. Table A-1 presents the cask capacities assumed for performing the consequence and risk analyses in Section A.8. These casks will benefit from past designs, but the application of current technology and analytical tools may allow improvements in design. For example, new-generation casks will probably be designed to be handled entirely remotely and thus will eliminate much routine worker exposure.

A.7.2.1 Spent-fuel casks

Figures A-1 and A-2 show a representative truck cask and a representative rail cask that will be used to transport spent fuel to a repository or to a facility for monitored retrievable storage (MRS) if such a facility is approved by Congress (see Section A.8.3.4). The 100-ton rail cask depicted could also be used for barge transport. The truck cask will be able to accommodate two spent-fuel assemblies from a pressurized-water reactor (PWR) or five assemblies from a boiling-water reactor (BWR). This represents about a doubling of capacity over existing truck casks. The representative truck cask will weigh 21,773 kilograms (48,000 pounds) when empty; when the cask is loaded on the tractor and trailer, the vehicle will weigh less than 36,288 kilograms (80,000 pounds), a weight that will allow it to travel relatively unimpeded by State weight limits for vehicles on the nation's highways. The cask may be constructed of carbon or stainless steel; shielding may be provided by steel, depleted uranium, or lead.

The rail/barge cask will be able to accommodate 14 PWR or 36 BWR assemblies, again representing a doubling of current cask capacity. The concept shown has a stainless-steel body with a sufficient wall thickness to meet all structural and radiation-limit requirements of regulations.

The conceptual designs for both the truck and the rail/barge casks have external impact limiters (shock absorbers designed to reduce the effects of accidents) mounted on the casks, as well as internal impact limiters made of crushable honeycomb material.

A.7.2.2 Casks for defense and commercial high-level waste

An artist's concept of the truck cask for defense high-level waste (DLHW) is shown in Figure A-3. It will be able to carry one 0.6- by 3-meter (2- by 10-foot) canister of vitrified defense waste (and possibly commerical high-level waste from the West Valley Demonstration Project (WVHLW)). When the cask is loaded on the tractor and trailer, the loaded trailer and tractor will weigh less than 36,288 kilograms (80,000 pounds). The cask will be constructed of stainless steel and will have a shielding sleeve of depleted uranium and steel. The cask will have features that allow it to be remotely handled, and the impact limiters will not have to be removed during loading

Table A-1. Reference cask capacities

Origin and destination	Waste type[a]	Container	Capacity[b]
	SPENT FUEL AND SECONDARY WASTE		
From reactors to repository or MRS facility			
Truck	Spent fuel	Unconsolidated assemblies	2/5
Rail	Spent fuel	Unconsolidated assemblies	14/36
From MRS facility to repository, 100-ton casks			
Salt sites	Spent fuel	Disposal container[c]	24/30
Tuff site	Spent fuel	Disposal container[c]	18/42
Basalt site	Spent fuel	Disposal container[c]	24/45
From MRS facility to repository, 150-ton casks			
Salt sites	Spent fuel	Canister[d]	72/150
Tuff site	Spent fuel	Canister[d]	48/98
Basalt site	Spent fuel	Canister[d]	84/171
From MRS facility to all sites			
100-ton casks	Hardware and high-activity low-level waste	Canister[e]	4
150-ton casks	Hardware and high-activity low-level waste	Canister[e]	7
Rail	Contact-handled transuranic waste	Drum	(f)
	HIGH-LEVEL WASTE		
Defense waste			
Truck	Glass HLW	Canister	1
Rail	Glass HLW	Canister	5
Commercial waste[g]			
Truck	Glass HLW	Canister	1
Rail	Glass HLW	Canister	7

[a] PWR = pressurized-water reactor; BWR = boiling-water reactor.
[b] Pairs of numbers show the number of PWR and BWR assemblies, respectively; for example, 2/5 means 2 PWR assemblies or 5 BWR assemblies.
[c] Disposal containers suitable for direct emplacement in a repository. Container sizes are different for each repository host rock.
[d] In thin-wall canisters that would require encapsulation in disposal container at the repository. Canister sizes are different for each repository host rock.
[e] A canister contains five 55-gallon drums.
[f] Thirty-six drums per transport package, two packages per railcar.
[g] High-level waste from the West Valley Demonstration Project.

8 0 0 0 8 1 1 7 7

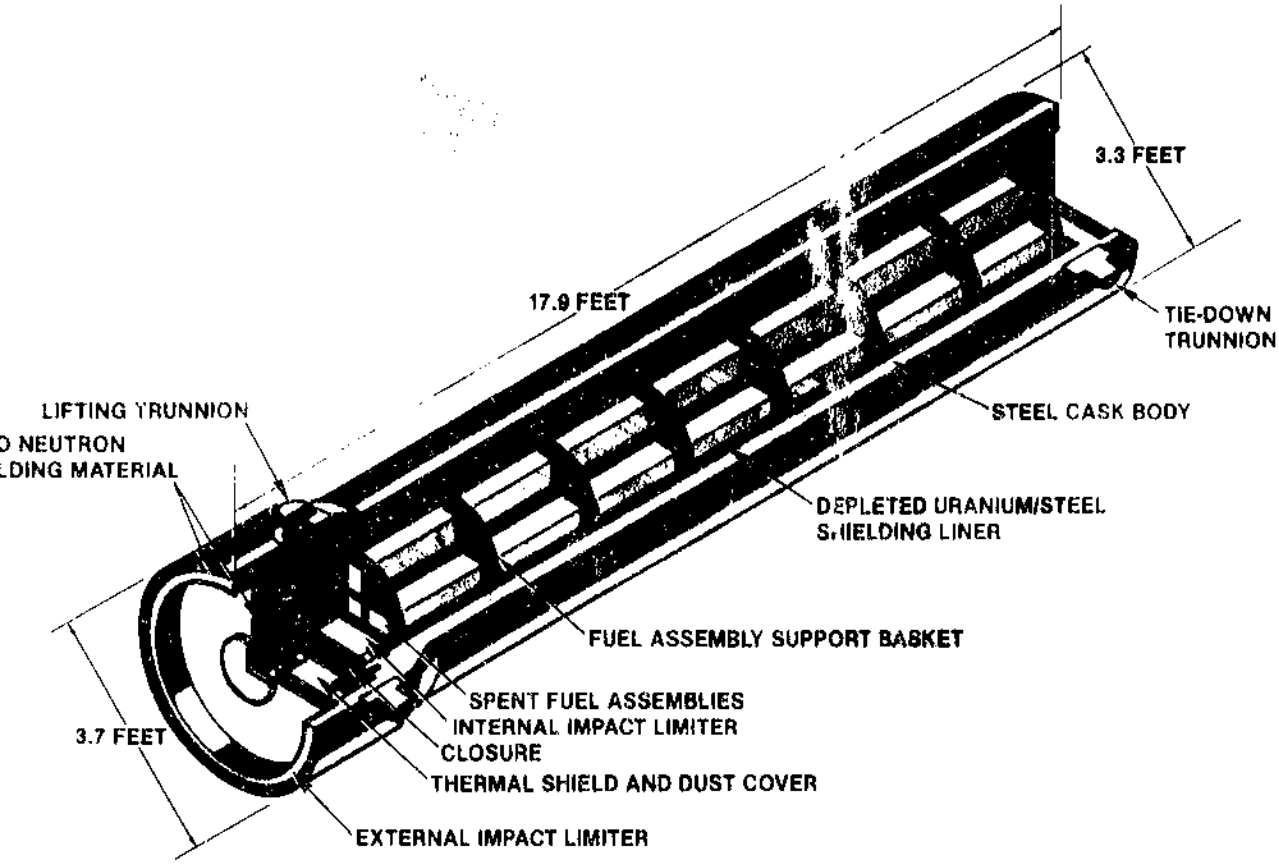

Figure A-1. Truck spent fuel cask.

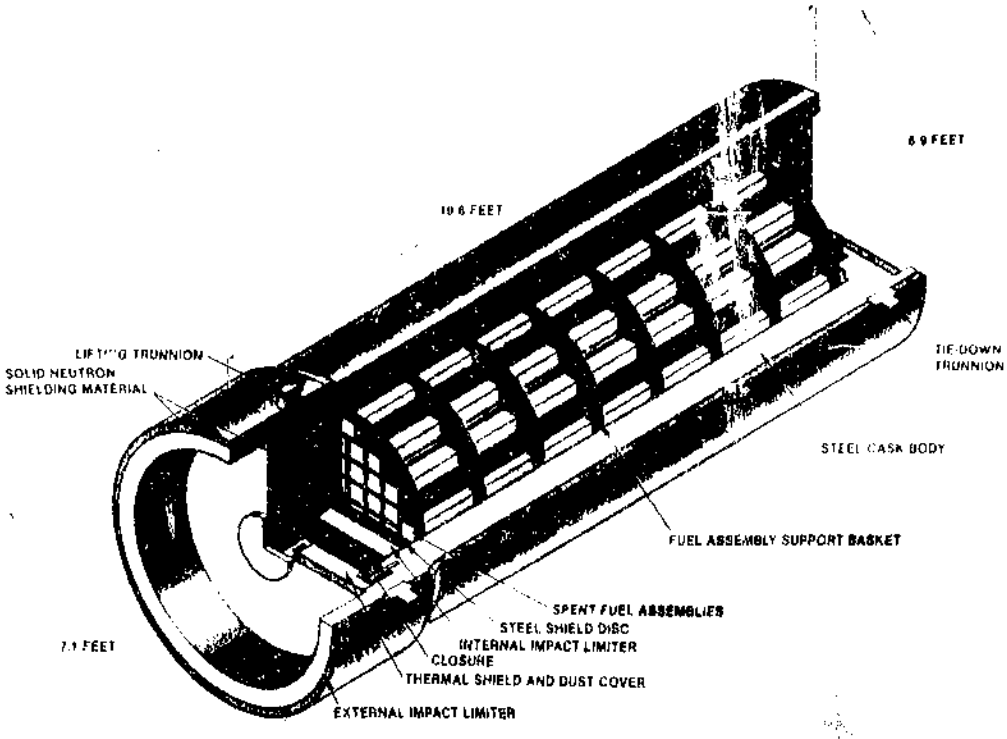

Figure A-2. Rail/barge spent fuel cask.

8 0 0 0 8 1 1 1 7 9

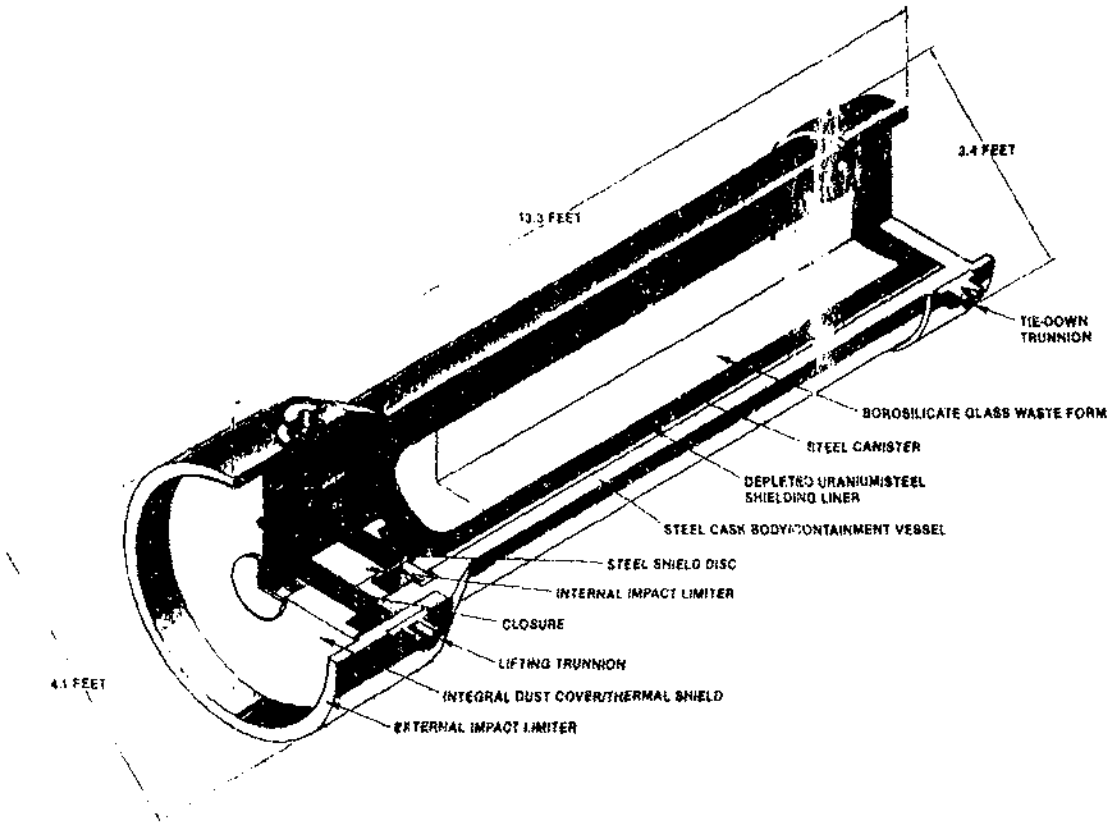

Figure A-3. DHLW truck cask.

8 0 0 0 8 1 1 8 0

and unloading. A rail cask may also be developed; and its capacity is expected to be five canisters of vitrified defense high-level waste (see Table A-1.)

A.7.2.3 Casks for use from an MRS facility to the repository

The DOE's Mission Plan (DOE, 1985) discusses an improved-performance waste-management system that includes a facility for monitored retrievable storage (MRS). Fully integrated into the system, the MRS facility would perform most of the waste-preparation functions now assigned to the repository. In particular, it would consolidate the spent-fuel rods, which are contained in rectangular spent-fuel assemblies, into a tighter circular array, load the consolidated rods into a metal canister, and store the canister until shipment to a repository, where the canisters would be encapsulated in disposal containers and emplaced in the underground disposal rooms. It would also be possible to have the MRS load the consolidated-fuel canisters into disposal containers, which would require no further preparation at the repository.

Casks that would be used in transporting the consolidated spent fuel from the MRS facility to the repository have not yet been designed; however, any design would be certified by the NRC. Scoping analyses have been completed and allow projections of cask capacities to be made. These projections are presented in Table A-1 for casks that weigh 100 and 150 tons. The larger cask may be feasible if an MRS facility is approved by Congress. The cask capacities depend on the host rock of the repository because each host rock is assumed to require a unique canister design and size.

The consolidation of spent-fuel rods at an MRS facility would separate the fuel from the structural components and therefore create another waste type that requires disposal. This secondary waste is separated into three classes: hardware, high-activity low-level waste (HAW), and contact-handled transuranic waste (CH-TRU). It is assumed that the hardware and high-activity waste would be loaded into 55-gallon drums, with five drums loaded into a canister. Packaging capacities for these wastes are given in Table A-1. The transuranic waste would be loaded into 55-gallon drums and shipped in a packaging that is assumed to have a capacity of 36 drums. Two of these packages could be carried by a railcar while only one could be carried by a truck trailer.

A.7.3 POSSIBLE FUTURE DEVELOPMENTS

A.7.3.1 Mode-specific regulations

Even with the safety record of packagings that have been analyzed or tested to survive accident conditions, the NRC is currently reviewing regulations defining accident test conditions in order to assess whether the conditions sufficiently bound those experienced in real accidents. The regulations prescribing accident conditions for transportation are not specific to the mode of transportation, the implicit assumption being that the conditions for all modes are covered by the current standards. Such an

assumption has been questioned, and, in response, the NRC is comparing the current standards with actual accident experience for all modes.

A.7.3.2 Overweight truck casks

Highway load restrictions limit the weight of truck casks, which in turn limits cask payloads. In general, these limitations are intended to protect the nation's highway system from damage. Considering the safety objective of minimizing the number of spent-fuel shipments, however, the DOE, in approving designs for future casks, will balance the benefit of reducing shipments against possible road damage caused by overweight vehicles.

Slightly larger truck casks can increase payload capacity, which, in turn, can significantly reduce the number of shipments. The DOE intends to investigate the potential of these larger casks and will consider their use if additional road damage can be minimized. The proposed use of any overweight equipment will be subject to early review and comment by appropriate State officials because the DOE recognizes the State as the permit-issuing authority for shipments requiring overweight or oversize equipment over the nation's highway system.

A.7.3.3 Rod consolidation

Another way to increase the capacities of spent-fuel casks is to consolidate spent-fuel rods in a canister, as mentioned above for the MRS facility. By so doing, cask capacities might be doubled. Preliminary investigations indicate that, in terms of cask design, the principal problems associated with rod consolidation are the increase in weight and the amount of heat that must be dissipated.

A.7.3.4 Advanced handling concepts

Since the number of radioactive-material packages received and handled at a repository will be high, even the low levels of radiation at the surfaces of the packages would be sufficient to cause high total worker exposure. In an attempt to minimize worker exposure, the use of advanced remote-handling equipment, such as robotics, for unloading the packages is being investigated. New shipping casks will be designed to facilitate the cask handling and unloading operations at the repository or MRS facility.

A.7.4 CONCLUSIONS

The design and performance of current packagings are adequate for the specific contents for which they were designed. However, the waste to be transported to a repository would not be efficiently transported in existing casks since it is older and cooler than the contents for which the existing casks were designed (typically spent fuel cooled for 180 days). Therefore, new casks designed for fuel at least 5 years old will be added to the fleet.

These casks will have increased capacities and features that facilitate remote handling. Because these new casks more realistically represent future shipping operations, the expected characteristics of these casks are used in this environmental assessment.

A.8 POTENTIAL HAZARDS OF TRANSPORTATION

This section provides a numerical estimate of the hazard associated with transporting radioactive waste to a repository. In response to numerous comments received on the draft Appendix A, additional emphasis was placed on the potential consequences to an individual, as opposed to a general population. The goal was to answer the frequent question: "What happens to me, if ...?" After explaining the consequences that could be experienced by an individual affected to a credible maximum extent, the consequences are extrapolated to a general population and then finally are combined with accident probabilities to produce an expected value of risk to the public. A separate analysis was performed to consider barge transport, which currently is thought only to provide a potential supplementary role in the transportation system (see to Section A.10). The potential uncertainties inherent in the results presented here are also discussed.

It must be emphasized at this juncture that all analyses are thought to be conservative, and hence the risks they predict are expected to be much greater than the risk that may actually occur.

A.8.1 POTENTIAL CONSEQUENCES TO AN INDIVIDUAL EXPOSED TO THE MAXIMUM EXTENT

The analyses in this section are really ("snapshots in time") where an individual is exposed as a result of a particular set of circumstances that may never happen and would probably never happen twice in exactly the same way or to the same individual. These analyses are specific to a single shipment, and details about shipping schedules and scenarios are deferred until Section A.8.2.

A.8.1.1 Normal transportation

This section presents estimates of credible maximum radiation doses that may be received by a person from selected activities that could result from transportation operations. The activities are not related to accidents but rather could occur during normal operations.

The results in the tables are taken from Sandquist et al. (1985). Sandquist et. al. represent truck and rail casks with a simple analytical model and assume that the dose rates emitted from the casks are at regulatory levels (i.e., at the maximum levels permitted by existing regulations). Table A-2 presents estimates for a truck cask, and Table A-3 is for a rail cask. A number of services or activities are analyzed for each mode.

In order to explain what the results in the tables mean, consider Table A-2 for truck. Under the "truck servicing" category, the table gives the dose

8 0 0 0 8 1 1 8 3

Table A-2. Projected maximum individual exposures from normal transport (truck spent-fuel cask)[a]

Description (service or activity)	Mean distance to center of cask (ft)	Maximum exposure time (min)	Dose rate and total dose
Caravan			
Passengers in vehicles traveling in adjacent lanes in the same direction as cask vehicle	35	30	0.04 mrem/min 1 mrem
Traffic obstruction			
Passengers in stopped vehicles in lanes adjacent to the cask vehicle; vehicles have stopped because of traffic obstruction	15	30	0.1 mrem/min 3 mrem
Residents and pedestrians			
Slow transit (because of traffic control through area with pedestrians)	20	6	0.07 mrem/min 0.4 mrem
Truck stop for driver's rest; exposures to residents and passers-by	130	[b]	0.006 mrem/min 3 mrem
Slow transit through area with residents (homes, businesses, etc.)	50	6	0.02 mrem/min 0.1 mrem
Truck servicing			
Refueling (100-gallon capacity)			0.06 mrem/min
One nozzle from one pump	25 (at tank)	40	2 mrem
Two nozzles from one pump	25 (at tank)	20	1 mrem
Load inspection and enforcement	10[c]	12	0.2 mrem/min 2 mrem
Tire change or repair of cask trailer	16[d]	50	0.1 mrem/min 5 mrem
State weight scales	15	2	0.1 mrem/min 0.2 mrem

[a] These exposures should not be multiplied by the expected number of shipments to a repository in an attempt to calculate a worst case because the same individual would not be exposed for every shipment, nor would these circumstances arise during every shipment. An individual residing 100 feet from a transportation route and witnessing <u>every</u> shipment would receive an annual dose of 2 to 8 mrem, depending on the mode of shipment and the cask size.

[b] Assumed to be overnight (8 hours).

[c] Inspection occurs near personnel barrier.

[d] Changed tire is the inside tire nearest cask.

8 0 0 0 8 1 1 8 4

Table A-3. Projected maximum individual exposures from normal transport (rail spent-fuel cask)*

Description (service or activity)	Mean distance to center of cask (ft)	Maximum exposure time (min)	Dose rate and total dose
Caravan			
Passengers in rail cars or highway vehicles traveling in same direction and vicinity as cask vehicle	65	10	0.03 mrem/min 0.3 mrem
Traffic obstruction			
Persons in vicinity of cask vehicle stopped or slowed down by rail traffic obstruction	20	25	0.1 mrem/min 2 mrem
Residents and pedestrians			
Slow transit (through station or because of traffic control) through area with pedestrians	25	10	0.07 mrem/min 0.7 mrem
Slow transit through area with residents (homes, businesses, etc.)	70	10	0.02 mrem/min 0.2 mrem
Train stop for crew's personal needs (food, crew change, first aid, etc.)	150	120	0.005 mrem/min 0.7 mrem
Train servicing			
Engine refueling, car changes, train maintenance, etc.	35	120	0.04 mrem/min 5 mrem
Cask inspection and enforcement by train, State, or Federal officials	10	10	0.2 mrem/min 2 mrem
Cask-car coupler inspection or maintenance	30	20	0.07 mrem/min 1 mrem
Axle, wheel, or brake inspection, lubrication, or maintenance on cask car	25	30	0.09 mrem/min 3 mrem

* These exposures should not be multipled by the expected number of shipments to a repository in an attempt to calculate a worst case because the same individual would not be exposed for every shipment, nor would these circumstances arise during every shipment. An individual residing 100 feet from a transportation route and witnessing <u>every</u> shipment would receive an annual dose of 2 to 8 mrem, depending on the mode of shipment and the cask size.

8 0 0 0 8 1 1 8 5

delivered to a person changing a tire on the trailer of a truck carrying a loaded spent-fuel cask. To change the tire, that required him to be only 5 meters (16 feet) from the center of the cask. It was further assumed that changing the innermost tire (dual wheels) would take almost a full hour. The dose rate at the location was estimated to be 0.1 millirem (mrem) per minute, a rate that would produce a 5-mrem dose to an individual for the complete service procedure. This dose is about the same as that received on a transcontinental airplane trip. If this person were estimated to change many tires in a year, the DOE may impose administrative controls to minimize the accumulated dose. Such control could be something as simple as requiring temporary lead shields between the cask and the area where the tire was to be changed.

Many of the services or activities analyzed would require administrative controls if they were to happen routinely. Routine occurrences either would not be allowed, or administrative controls would be applied to limit cumulative exposures. These types of activities and services will be more fully analyzed during the preparation of the environmental impact statement. This analysis does highlight the fact that additional controls may be necessary for the large numbers of shipments that will occur under the Act, but it must also be emphasized that the simplified model used by Sandquist et al. (1985) will calculate doses much greater than expected.

A.8.1.2 Accidents

Table A-4 presents the results of an analysis performed by Sandquist et al. (1985) to evaluate the individual dose that may result from three classes of very severe accidents--accidents that would produce conditions more severe than the regulatory test conditions. Accidents of this severity are not likely to occur during shipments to a repository.

Each set of results in Table A-4 is for an accident in which there is a release from a rail cask carrying 14 PWR assemblies. The releases are consistent with those assumed in past analyses (Wilmot et al., 1983; Neuhauser et al., 1984) and are based on the release mechanisms defined by Wilmot (1981).

The three accident classes (4, 5, and 6) are taken from Wilmot et al. (1983). These are very severe accidents, all of which would produce conditions greatly exceeding those specified in the NRC regulations. A Class 4 accident would require a very severe impact (i.e., perhaps a 30-meter (100-foot) drop onto a granite slab). This impact would release adhered activation products and may rupture a few spent-fuel rods. A Class 5 accident requires a Class 4 impact with a subsequent very intense fire (a fire longer and hotter than that of the regulatory test). A Class 6 accident requires a Class 4 impact and an even hotter fire than Class 5. A Class 6 accident would result in the severe oxidation of ruptured fuel rods. These accidents are extremely unlikely; they are estimated to occur once in a million vehicle accidents.

The maximum dose received by an individual in the most severe accident is about 10,000 mrem; it would be incurred by a person standing about 70 meters (230 feet) from the scene of the accident. Most of the dose comes from

Table A-4. Estimated maximum individual radiation dose for rail-cask accidents

	Dose (mrem)[a,b]				
ccident class[c]	Inhalation	Plume gamma	Ground gamma	Dust Inhalation	Total
4	180	11	12	0.0001	200
5	6,100	71	91	0.004	6,300
6	9,000	550	710	0.0006	10,300

[a] Maximum individual dose occurs about 70 meters (230 feet) downwind of he release point.

[b] Values reported as the effective whole-body dose.

[c] Accident class as defined by Wilmot et al. (1983). Class 6 is the ost severe, but all classes have probabilities of less than 1 in a million ccidents.

8 0 0 0 8 1 1 9 7

inhaling radionuclides from the plume. The dose itself would occur over decades and would come from radionuclides retained within the body. Even if all of the dose were received during a short ("acute exposure") period, the individual would show no symptoms nor have his life threatened. An "acute" dose of about 50,000 mrem would be required before any symptoms would be observable; a dose of more than 450,000 mrem would be required before the chance of dying within 30 days is 50-50 (NCRP, 1962).

The doses calculated can be greater or smaller, depending on the circumstances; however, the analyses made no attempt to account for the mitigating measures that would immediately be exercised after an accident. Even such simple measures as staying indoors could easily reduce the doses by tenfold or more. By carefully tracking the release of material as it is dispersed by the wind, such advisories can be made.

The dose received by a firefighter was calculated for an accident even if no radioactive material was released. If the firefighter spent an hour at the scene of the accident, he would receive a dose of up to 24 mrem. A description of this analysis is also given by Sandquist et al. (1985). If a firefighter was responding to an accident in which there was a release and did not use breathing protection, he could be expected to receive a dose of about 10,000 mrem, as described above for the maximumally exposed individual. With breathing protection, the dose could easily be reduced to less than 1,000 mrem.

A.8.2 CONSEQUENCES TO A LARGE POPULATION FROM VERY SEVERE TRANSPORTATION ACCIDENTS

In this section, some doses are calculated for a large population, not just for a single individual as in Section A.8.1. The accidents analyzed are very unlikely, on the order of 1 in a million accidents or less.

Two scenarios are postulated: (1) an accident where material is released during an accident, dispersed, and deposited on the ground and (2) an accident where the radionuclides released are deposited in a reservoir that is used for many purposes, including drinking water. The three most-severe accident classes defined by Wilmot et. al. (1983) are considered, as described in Section A.8.1.2. Three exposure pathways are considered: inhalation, cloudshine, and groundshine. A fourth, the inhalation of resuspended dust, was found to be unimportant in comparison with the other three. As shown in Table A-5, in the most-severe accident in an urban area, 22 latent-cancer fatalities are predicted for the ground-deposition case and 13 for the water-deposition case. These values are based on the assumption that no mitigating administrative control or accident-scene clean-up takes place. Evacuation would reduce these numbers, as would cleaning up the contaminated areas. In the water-deposition case, no credit was taken for the normal settling and filtering processes that take place during water treatment and would certainly be employed after an accident. Details can be found in the report by Sandquist et al. (1985).

Table A-5. Estimated 50-year population dose for rail-cask accidents[A]

Accident consequence	Air release[B]								Water release in urban area[E]
	Urban area[C]				Rural area[D]				
	Inhalation	Plume gamma	Ground gamma	Total	Inhalation	Plume gamma	Ground gamma	Total	
				CLASS 4 ACCIDENTS[F]					
Population dose (man-rem)	3	0.33	940	940	0.005	0.0005	1.4	1.4	180
Number of latent-cancer fatalities[G]				0.2				0.0003	0.04
				CLASS 5 ACCIDENTS[F]					
Population dose (man-rem)	110	2.2	13,000	13,000	0.2	0.003	21	21	6,980
Number of latent-cancer fatalities[G]				3				0.004	1.4
				CLASS 6 ACCIDENTS					
Population dose (man-rem)	150	17	110,000	110,000	0.2	0.03	170	170	63,080
Number of latent-cancer fatalities[G]				22				0.04	13

[A] Estimates based on the assumption that there is no cleanup of deposited radionuclides.

[B] The ground dose is the dose that would be received if each member of the population stayed at the same location for 50 years. The inhalation dose is a 50-year dose commitment from the inhalation of the passing plume. Doses are for the population within 80 kilometers (50 miles) of the release point.

[C] Urban area assumed to have 10,000 people per square mile.

[D] Rural area assumed to have 16 people per square mile.

[E] Population dose from water ingestion. The noble gas krypton-85 is omitted because of its negligible uptake by a surface-water body. Population-dose estimates based on a 100-acre, 1-billion-gallon reservoir that supplies the domestic, agricultural, and industrial needs of 37 million people. No radioactive decay, settling, or filtration is assumed. The water-release accident is much less likely to occur than either of the air-release accidents.

[F] Accident classes as defined by Wilmot et al. (1983).

[G] Based on 1 man-rem = 2×10^{-4} latent-cancer fatality plus first- and second-generation genetic effects.

A.8.3 RISK ASSESSMENT

The preceding section presented the consequences of an accident to a large population. This section examines the expected risk to the public (as a group of individuals) by including not only the consequences but also the probability of the accident. The results depend on shipment logistics and schedules for all shipments. In order to describe the results more clearly and to explain the differences between the results presented in the draft appendix and in this final version, this section briefly describes the computational models and the revisions made in the models, the waste-management scenarios that were analyzed, and assumptions about the waste.

A.8.3.1 Outline of method for estimating population risks

By recognizing similarities and uniformities over a national or large regional scale, simplifying assumptions were made in the risk-assessment calculations. Such simplification is justified because the importance of the results presented is not so much in their absolute values but rather in their relative magnitude when compared among the potential repository sites.

The most important simplification was to create "unit-risk" factors, which represent the risk of transportation for a unit distance of travel in a defined population zone. The use and development of unit-risk factors have been described by Madsen et al. (1983).

Once the unit-risk factors have been obtained for the population zones required (in this analysis, three different population densities were considered), three other factors are needed to evaluate the total risk of transportation to a site: (1) the total distance per trip, (2) the fraction of travel in each of the population zones, and (3) the number of shipments that may occur. Actual distances for representative routes were calculated from each reactor and waste source to the potential repository sites. The number of shipments was calculated from detailed logistics models that are best described in the detailed text of Shay et al. (1985). How the fraction of travel in the various population zones was determined is discussed by Cashwell et al. (1985). It is sufficient here to mention that actual 1980 census data were reduced to population contours, which in turn were overlaid on postulated routes. The distance of travel in each zone was subsequently translated to a fraction of travel.

A.8.3.2 Computational models and methods for estimating population risks

The analytical tools (i.e., the analytical models or codes used in this analysis) have been extensively documented elsewhere, and the interested reader is encouraged to review this documentation for details of model development (AEC, 1972; NRC, 1977; Taylor and Daniel, 1977, 1982; Madsen et al., 1983; Wilmot et al., 1983; Neuhauser et al., 1984). This section identifies the models and shows that they have been developed, used, and verified sufficiently to establish their credibility.

8 0 0 0 8 1 1 9 0

The RADTRAN-II code, which was used to calculate the radiological unit-risk factors, is the product of about 10 years of development. Its precursor was used to produce the environmental assessment used in Interstate Commerce Commission (ICC) hearings concerning the issue of hauling radioactive material in trains dedicated to radioactive material (ICC, 1977). RADTRAN was used to produce documents that are current standards for evaluating the risk of transporting radioactive materials (NRC, 1977, 1983). Furthermore, the code has been used as the basis for other significant risk-assessment tools, including METRAN (Finley et al., 1980), which evaluates the risk of transportation in urban areas, and INTERTRAN (Ericson and Elert, 1983), which is the risk-assessment tool of the International Atomic Energy Agency.

The nonradiological unit-risk factors were calculated from available data collected from actual transportation records (Cashwell et al., 1985).

HIGHWAY (Joy et al., 1982) and INTERLINE (Peterson, 1984) are routing models for highway and rail shipment. Developed over the past several years, they are updated periodically to reflect current road and track conditions and railroad ownership. They are benchmarked against reported mileages and observations of commercial truck and rail firms.

A.8.3.3 Changes in the analytical models and methods for estimating population risks

Many significant improvements have been made in the analytical models and methods since the analyses were by completed by Neuhauser et al. (1984), for the draft environmental assessment. A couple of the modifications have resulted in significant changes in the absolute value of the expected results, and therefore it is important to identify them. The interested reader is encouraged to review the references given.

The most important improvement was made to the railstop model in RADTRAN-II, which calculates the occupational and public dose accumulated as a truck or train is stopped during transit. The primary basis for the change is a survey performed by an expert in railroad operations and documented by Ostmeyer (1985a). The railstop-exposure model can treat both general-freight and "dedicated-train" (see Section A.13.4.3) shipments. The model classifies railstop exposures into two types: employee proximity exposures and general rail-and-nonrail population exposures. The proximity exposures are received by employees who handle waste shipments at railstops. In the case of general-freight shipments, these exposures result from train classifications, car repair, and train inspections. The dedicated-train proximity exposures result from train inspections and car repairs. General rail-and-nonrail exposures are received by railyard employees not handling the shipment and the general population that surrounds the railyard. Unlike crew proximity exposures, which depend on the number of train "handlings," general-population exposures depend on railstop duration.

Another major change to RADTRAN II is the addition of a food-ingestion model. Population doses from food ingestion are estimated by using radionuclide transfer fractions. The model is documented by Ostmeyer et al.

(1985b). Population food exposures are estimated only for accidents that occur in rural areas. However, because of the nature of the model, food-ingestion doses are not limited to the residents of rural areas.

Food transfer fractions were determined for cobalt, cesium, strontium, and plutonium radionuclides. All other radionuclides will make negligible contributions to food-pathway risks for waste-transportation accidents. Each transfer fraction represents the "time-integrated" transfer of the radionuclide through the food-ingestion pathway. Transfer fractions were determined by using both empirical fallout data and systems-analysis models.

The occupational and nonoccupational nonradiological risks for rail accidents were updated to be consistent with the most recent edition of National Transportation Statistics (DOT, 1985). In addition, the calculation of risk associated with dedicated trains was updated to incorporate the appropriate statistical base. Two years of accident data, 1982 and 1983, are cited in this document; to obtain statistics for the analysis performed here, the data for both years were averaged.

For calculating all of the radiological and nonradiological risks associated with incident-free rail transportation, input must be in terms of fatalities per railcar-kilometer and injuries per railcar-kilometer. For general-commerce rail transportation, average occupational and nonoccupational accident-related fatalities are divided by the appropriate average values for railcar-kilometers of Class I freight. The number of injuries are derived from the numbers of fatalities.

However, unlike all radiological risks and incident-free nonradiological pollution risks, which depend on train length, the nonradiological-accident term is dominated by grade-crossing accidents, whose occurrence depends solely on the number of trains rather than the length of trains carrying radioactive waste. Consequently, for dedicated trains only, the unit risk factors are expressed in terms of risk per train rather than risk per railcar. Dedicated trains are assumed for shipments from the MRS facility. Further details are given by Cashwell et al. (1985).

Finally, a method was developed for modifying unit-risk factors to reflect changes in population densities. A brief discussion of this method is presented below.

In the relationships given below, five symbols are used. They are defined as follows:

F_1= A zone- and material-dependent risk factor based on rural, suburban, and urban population densities of 6, 719, and 3,861 persons per square kilometer, respectively.

F_2= Any revision to F_1 desired because of a change in population density.

$\S_1$= One of the population densities (6, 719, or 3,861 persons per square kilometer).

$\S_2$= The altered value of a population density.

8 0 0 0 8 1 1 9 2

a= The fraction of the normal nonoccupational radiological risk contributed by offlink exposures to the general population [a = offlink/(onlink + stops + offlink)].

The following values of the quantity a were used for each mode and population zone:

Mode	Rural	Suburban	Urban
Truck	0.00	0.[illegible]8	0.07
Train	0.03	0.65	0.47
Dedicated Train	0.23	0.97	0.76

The resultant radiological and nonradiological risk factors are as follows:

Radiological Risks

Normal occupational fatalities	Unchanged
Normal nonoccupational fatalities	$F_2 = F_1[a(\S_2/\S_1) + (1 - a)]$
Accident nonoccupational fatalities	$F_2 = (\S_2/\S_1)F_1$

Nonradiological Risks

Normal nonoccupational fatalities	$F_2 = (\S_2/\S_1)F_1$
Accident occupational fatalities	Unchanged
Accident nonoccupational fatalities	Unchanged
Accident injuries	Unchanged

A.8.3.4 Transportation scenarios evaluated for risk analysis

The DOE has described two different waste-management systems in the Mission Plan (DOE, 1985): an authorized system and an improved-performance system. In the authorized system, spent fuel and defense high-level waste would be shipped directly from the sources (reactors and waste sources) to the repository. In the improved-performance system, a centrally located MRS facility would be used to prepare the spent fuel for disposal in the repository.

The rate at which the repository would accept spent fuel and high-level waste is given in Table A-6 for the authorized system. The high-level waste is assumed to be sent directly to the repository under either plan. The volume of defense waste that is used for this analysis is greater than that presented in the Mission Plan in order not to underestimate the environmental impact of transporting this waste.

Several cases are considered for the improved performance system; they are defined by changes to two inputs: (1) the size of the cask used to transport waste to the repository from the MRS facility and (2) the location to which reactors west of the Rocky Mountains (longitude 100°W) ship their spent fuel. Two cask sizes were considered: 100 and 150 tons. Reactors west

Table A-6. Repository waste-acceptance schedule for the authorized system (metric tons of uranium)

Year	Spent fuel	High-level waste[a, b]			
		Savannah River	INEL[c]	Hanford	West Valley[d]
1998	400				
1999	400				
2000	400				
2001	900				
2002	1,800				
2003	3,000	350		75	20
2004	3,000	350		75	20
2005	3,000	350		75	20
2006	3,000	350		75	20
2007	3,000	350		75	20
2008	3,000	200	300	75	20
2009	3,000	200	300	75	20
2010	3,000	200	300	75	20
2011	3,000	200	300	75	20
2012	3,000	200	300	75	20
2013	3,000	200	300	75	20
2014	3,000	200	300	75	20
2015	3,000	200	300	75	20
2016	3,000	350	300	75	20
2017	3,000	350	300	75	20
2018	3,000	350	300		20
2019	3,000	350	300		20
2020	3,000	350	300		20
2021	3,000	350	300		20
2022	1,100	350	300		20

[a] A canister of high-level waste contains the fission products from the reprocessing of 0.5 MTU of spent fuel.

[b] The values given for high-level waste were developed for use in these EAs. They are believed to be maximum values that would not be exceeded and do not reflect expected values. They do not compare with the values given in the Mission Plan (DOE, 1985).

[c] Idaho National Engineering Laboratory.

[d] Commercial high-level waste from the West Valley Demonstration Project.

9 0 0 0 8 1 1 0 4

of longitude 100°W were assumed to ship either directly to the repository or to the MRS facility. All four combinations were considered. The waste-acceptance rates for the MRS facility and the repository are given in Tables A-7 and A-8 for the two cases involving different destinations for the spent fuel from western reactors.

A.8.3.5 Assumption about wastes

Detailed descriptions of the spent fuel and miscellaneous wastes are given by Cashwell et al. (1985); however, some basic assumptions fundamental to the risk analysis are presented here.

The spent fuel was assumed to be 5 years old if shipped from the reactors and 10 years old if shipped from the MRS facility. In order to bound the consequences, all analyses assume that the composition of the radionuclide release during postulated accidents is derived from a pressurized-water reactor. The fuel burnup was assumed to be 33,000 MWd/MTU. It was assumed that the spent-fuel assemblies have limited amounts of radioactivity ("crud") on their exterior surfaces; this can be knocked loose and readily released to the inside of a cask under accident conditions. Spent fuel shipped from the MRS facility is consolidated and shipped either in a thin-wall repository-specific canister or encapsulated in a container designed specifically for disposal in one of the different repository host rocks. (The repository-specific canisters would be encapsulated in disposal containers at the repository.).

The high-level waste--defense high-level waste from three reprocessing plants and commercial high-level waste from West Valley Demonstration Project--was assumed to have the composition of defense waste from the Savannah River Plant. Therefore, each canister of waste was assumed to contain the inventory resulting from the processing of 0.5 MTU of spent fuel. The waste matrix was assumed to be a glass.

The wastes resulting from fuel consolidation--hardware, high-activity low-level waste, and contact-handled transuranic waste (CH-TRU)--were assumed to be shipped along with consolidated spent fuel to the repository. The hardware contains activation products; the high-activity low-level waste also has significant amounts of fission products; and the contact-handled transuranic waste contains mainly transuranic radionuclides, which pose no particular external radiation hazard. The high-activity low-level waste and the hardware are placed in drums and then five drums are loaded into a canister; the transuranic waste is packed in drums.

A.8.3.6 Operational considerations in risk analysis

Shipments from the reactors and HLW processing plants are made by truck or rail in general-commerce shipments. Cask sizes are limited so that no special restrictions are encountered enroute. Shipments from the MRS facility, however, are made in dedicated trains that haul only the radioactive material being shipped to the repository. The reference dedicated train

Table A-7. Receipt rates for scenario involving all reactors shipping to an MRS facility

ar	Spent fuel[a] (MTU)		Secondary waste products to repository		
	All reactors to MRS	MRS to repository	Hardware (canisters)	High-activity waste (canisters)	CH-TRU[b] (drums)
96	400				
97	1,800				
98	3,000	400	35	33	74
99	3,000	400	35	33	74
00	3,000	400	35	33	74
01	3,000	900	79	4	166
02	3,000	1,800	158	117	331
03	3,000	3,000	264	246	552
04	3,000	3,000	264	246	552
05	3,000	3,000	264	246	552
06	3,000	3,000	264	246	552
07	3,000	3,000	264	246	552
08	3,000	3,000	264	246	552
09	3,000	3,000	264	246	552
10	3,000	3,000	264	246	552
11	3,000	3,000	264	246	552
12	3,000	3,000	264	246	552
13	3,000	3,000	264	246	552
14	3,000	3,000	264	246	552
15	3,000	3,000	264	246	552
16	3,000	3,000	264	246	552
17	2,800	3,000	264	246	552
18		3,000	264	246	552
19		3,000	264	246	552
20		3,000	264	246	552
21		3,000	264	246	552
22		1,100	97	90	202

[a] Spent fuel only; high-level waste is assumed to be shipped directly to a repository the improved-performance system, bypassing the MRS facility (see Table A-6).
[b] Contact-handled transuranic waste.

Table A-8. Facility receipt rates for scenario involving only eastern reactors shipping to an MRS facility

Year	Spent fuel (MTU)			Secondary waste products to repository		
	Eastern reactors to MRS	Western reactors to repository	MRS to repository	Hardware (canisters)	High-activity waste (canisters)	CH-TRU (drums)
996	370					
997	1,665					
998	2,775	30	370	32	31	68
999	2,775	30	370	32	31	68
000	2,775	30	370	32	31	68
001	2,775	67.5	832.5	73	68	154
002	2,775	135	1,665	146	228	306
003	2,775	225	2,775	244	228	511
004	2,775	225	2,775	244	228	511
005	2,775	225	2,775	244	228	511
006	2,775	225	2,775	244	228	511
007	2,775	225	2,775	244	228	511
008	2,775	225	2,775	244	228	511
009	2,775	225	2,775	244	228	511
010	2,775	225	2,775	244	228	511
011	2,775	225	2,775	244	228	511
012	2,775	225	2,775	244	228	511
013	2,775	225	2,775	244	228	511
014	2,775	225	2,775	244	228	511
015	2,775	225	2,775	244	228	511
016	2,590	225	2,775	244	228	511
017	2,800	225	2,775	244	228	511
018		225	2,775	244	228	511
019		225	2,775	244	228	511
020		225	2,775	244	228	511
021		225	2,775	244	228	511
022		82.5	1,017.5	90	83	187

8 0 0 0 8 1 1 9 7

consists of five spent-fuel casks, two hardware casks, two high-activity-waste casks, and one rail car carrying contact-handled transuranic waste. The dedicated train has different operational characteristics than a general-commerce train, and the analyses reflect those differences.

A.8.3.7 Values for factors needed to calculate population risks

As described in Section A.8.3.1, four factors are needed to assess the population risks from waste transportation: unit risk factors, shipment distances, fractions of travel in various population zones, and the number of shipments.

Tables A-9 through A-12 present all of the unit risk factors used in the analyses made for this environmental assessment. Tables A-9 and A-10 give the factors for shipments that originate at the reactors and the HLW processing plants. The unit risk factors are given for truck and rail shipment and for each population zone. All rail factors are for an individual railcar in general commerce. Table A-9 presents estimates of the radiological risks from normal transportation and accidents. The normal risk is subdivided into occupational and nonoccupational categories. The accident risk is not divided by occupational category because potential exposures for each category are similar (see Section A.8.1.2), and the population density used in the calculations can be considered to include both categories. Table A-10 presents estimates of the nonradiological risk.

Tables A-11 and A-12 contain risk factors for shipments that originate at the MRS facility. Separate factors are given for consolidated-fuel shipments in both the 100- and 150-ton casks and for the secondary wastes that are generated in consolidation. All shipments from the MRS facility were assumed to be by dedicated train, and therefore the unit risk factors are for a complete train (i.e., the factors are on a train-mile, rather than a railcar-mile, basis).

Shipment distances are found in Tables A-13 and A-14. Table A-13 gives the distances from a few chosen reactors in different regions of the United States to the MRS facility and each repository site and from the MRS facility to each repository site. A complete listing of reactors can be found in the report by Cashwell et al. (1985). Table A-14 shows the distances from the HLW sites to the various repository sites. A summary of total shipment distances is given in Table A-15 for each transportation scenario evaluated for the authorized system and the improved-performance system. Distances are given for the cases where shipments are made by all truck or all rail. For two of the scenarios estimates are given for each waste type to provide a perspective on the contribution of each.

The fractions of travel in the various population zones are found in Tables A-16 and A-17 for the selected reactors and the HLW processing sites, respectively. Routes from each source are analyzed to determine the approximate amount of travel in each of the population ones. Further details and all remaining reactor data can be found in the report by Cashwell et al. (1985).

8 0 0 0 8 1 1 9 8

Table A-9. Radiological risk factors for shipments from waste sources to a repository or MRS facility[a]

Mode	Zone	Hazard group	Spent fuel[b]	DHLW[c]	WVHLW[d]
Truck	Rural	Normal occupational fatalities	4.70E-09[e]	4.14E-09	4.14E-09
Truck	Rural	Normal nonoccupational fatalities	2.84E-08	2.54E-08	2.54E-08
Truck	Rural	Accident nonoccupational fatalities	3.10E-13	2.66E-13	1.79E-13
Truck	Suburban	Normal occupational fatalities	1.03E-08	9.10E-09	9.10E-09
Truck	Suburban	Normal nonoccupational fatalities	4.36E-08	3.92E-08	3.92E-08
Truck	Suburban	Accident nonoccupational fatalities	7.46E-10	1.08E-10	7.60E-11
Truck	Urban	Normal occupational fatalities	1.72E-08	1.52E-08	1.52E-08
Truck	Urban	Normal nonoccupational fatalities	5.96E-08	5.36E-08	5.36E-08
Truck	Urban	Accident nonoccupational fatalities	1.22E-09	2.16E-10	1.52E-10
Rail	Rural	Normal occupational fatalities	2.14E-09	2.04E-09	1.03E-09
Rail	Rural	Normal nonoccupational fatalities	1.16E-09	1.03E-09	1.03E-09
Rail	Rural	Accident nonoccupational fatalities	1.34E-12	5.56E-13	5.40E-13
Rail	Suburban	Normal occupational fatalities	2.14E-09	2.04E-09	2.04E-09
Rail	Suburban	Normal nonoccupational fatalities	7.70E-09	6.90E-09	6.90E-09
Rail	Suburban	Accident nonoccupational fatalities	2.78E-09	2.72E-10	2.64E-10
Rail	Urban	Normal occupational fatalities	2.14E-09	2.04E-09	2.04E-09
Rail	Urban	Normal nonoccupational fatalities	2.58E-09	2.32E-09	2.32E-09
Rail	Urban	Accident nonoccupational fatalities	6.72E-09	5.08E-09	4.92E-09

[a] Radiological risk factors per kilometer of travel. To convert factors to risk per mile, multiply by 1.609. Based on 1 man-rem = 2×10^{-4} latent-cancer fatality plus first- and second-generation genetic effects.

[b] Unit risk factors for general-commerce truck and rail transportation of spent fuel; units are per kilometer for truck and per railcar-kilometer for rail.

[c] Unit risk factors for general-commerce truck and rail transportation of defense high-level wastes; units are per kilometer for truck and per railcar-kilometer for rail.

[d] Unit risk factors for general-commerce truck and rail transportation of commercial high-level waste from West Valley; units are per kilometer for truck and per railcar-kilometer for rail.

[e] 4.70E-09 = 4.7×10^{-9}.

8 0 0 0 8 1 1 9 9

Table A-10. Nonradiological risk factors for shipments from waste sources to a repository or MRS facility[a]

de	Zone	Hazard group	Spent-fuel[b]	DFHLW[c]	WVHLW[d]
uck	Rural	Normal nonoccupational fatalities	0.00E+00	0.00E+00	0.00E+00
uck	Rural	Accident occupational fatalities	1.50E-08[e]	1.50E-08	1.50E-08
uck	Rural	Accident nonoccupational fatalities	5.30E-08	5.30E-08	5.30E-08
uck	Rural	Accident occupational injuries	2.80E-08	2.80E-08	2.80E-08
uck	Rural	Accident nonoccupational injuries	8.00E-07	8.00E-07	8.00E-07
uck	Suburban	Normal nonoccupational fatalities	0.00E+00	0.00E+00	0.00E+00
uck	Suburban	Accident occupational fatalities	3.70E-09	3.70E-09	3.70E-09
uck	Suburban	Accident nonoccupational fatalities	1.30E-08	1.30E-08	1.30E-08
uck	Suburban	Accident occupational injuries	1.30E-08	1.30E-08	1.30E-08
uck	Suburban	Accident nonoccupational injuries	3.80E-07	3.80E-07	3.80E-07
uck	Urban	Normal nonoccupational fatalities	1.00E-07	1.00E-07	1.00E-07
uck	Urban	Accident occupational fatalities	2.10E-09	2.10E-09	2.10E-09
uck	Urban	Accident nonoccupational fatalities	7.50E-09	7.50E-09	7.50E-09
uck	Urban	Accident occupational injuries	1.30E-08	1.30E-08	1.30E-08
uck	Urban	Accident nonoccupational injuries	3.70E-07	3.70E-07	3.70E-07
il	Rural	Normal nonoccupational fatalities	0.00E+00	0.00E+00	0.00E+00
il	Rural	Accident occupational fatalities	1.81E-09	1.81E-09	1.81E-09
il	Rural	Accident nonoccupational fatalities	2.64E-08	2.64E-08	2.64E-08
il	Rural	Accident occupational injuries	2.46E-07	2.46E-07	2.46E-07
il	Rural	Accident nonoccupational injuries	5.12E-08	5.12E-08	5.12E-08
il	Suburban	Normal nonoccupational fatalities	0.00E+00	0.00E+00	0.00E+00
il	Suburban	Accident occupational fatalities	1.81E-09	1.81E-09	1.81E-09
il	Suburban	Accident nonoccupational fatalities	2.64E-08	2.64E-08	2.64E-08
il	Suburban	Accident occupational injuries	2.46E-07	2.46E-07	2.46E-07
il	Suburban	Accident nonoccupational injuries	5.12E-08	5.12E-08	5.12E-08
il	Urban	Normal nonoccupational fatalities	1.30E-07	1.30E-07	1.30E-07
il	Urban	Accident occupational fatalities	1.81E-09	1.81E-09	1.81E-09
il	Urban	Accident nonoccupational fatalities	2.64E-08	2.64E-08	2.64E-08
il	Urban	Accident occupational injuries	2.46E-07	2.46E-07	2.46E-07
il	Urban	Accident nonoccupational injuries	5.12E-08	5.12E-08	5.12E-08

[a] Nonradiological risk factors per kilometer of travel. To convert factors to risk per le, multiply by 1.609.

[b] Unit risk factors for general-commerce truck and rail transportation of spent fuel, its are per kilometer for truck, per railcar kilometer for normal rail, and per ain-kilometer for rail accidents. (Note: for general-commerce rail, 1 train-kilometer is uivalent to 1 railcar-kilometer.)

[c] Unit risk factors for general-commerce truck and rail transportation of defense gh-level waste; units are per kilometer for truck, per railcar-kilometer for normal rail, and r train-kilometer for rail accidents. (Note: For general-commerce rail, 1 train-kilometer equivalent to 1 railcar-kilometer.)

[d] Unit risk factors for general-commerce truck and rail transportation of commercial gh-level waste from West Valley; units are per kilometer for truck, per railcar-kilometer r normal rail, and per train-kilometer for rail accidents. (Note: For general-commerce il, 1 train-kilometer is equivalent to 1 railcar-kilometer.)

[e] 1.50E-08 = 1.5×10^{-8}.

Table A-11. Radiological risk factors for shipments from MRS facility[A]

Mode	Zone	Hazard group	Consolidated spent fuel					
			100-ton cask			150-ton cask		
			MRS-salt[B]	MRS-tuff[B]	MRS-basalt[B]	MRS-salt[B]	MRS-tuff[B]	MRS-basalt
Rail	Rural	Normal occupational fatalities	6.68E-10	6.68E-10	6.68E-10	6.68E-10	6.68E-10	6.68E-10
Rail	Rural	Normal nonoccupational fatalities	8.32E-10[C]	8.32E-10	8.32E-10	8.32E-10	8.32E-10	8.32E-10
Rail	Rural	Accident non-occupational fatalities	6.58E-12	4.88E-12	6.56E-12	1.76E-11	1.22E-11	2.02E-11
Rail	Suburban	Normal occupational fatalities	6.68E-10	6.68E-10	6.68E-10	6.68E-10	6.68E-10	6.68E-10
Rail	Suburban	Normal nonoccupational fatalities	3.36E-08	3.36E-08	3.36E-08	3.36E-08	3.36E-08	3.36E-08
Rail	Suburban	Accident nonoccupational fatalities	1.29E-08	9.88E-09	1.29E-08	3.46E-08	2.38E-08	3.94E-08
Rail	Urban	Normal occupational fatalities	6.68E-10	6.68E-10	6.68E-10	6.68E-10	6.68E-10	6.68E-10
Rail	Urban	Normal nonoccupational fatalities	7.98E-09	7.98E-09	7.98E-09	7.98E-09	7.98E-09	7.98E-09
Rail	Urban	Accident nonoccupational fatalities	3.10E-08	2.38E-08	3.10E-08	8.30E-08	5.76E-08	9.50E-08

Mode	Zone	Hazard group	Secondary wastes					
			100-ton Cask			150-ton Cask		
			MRS-HRDWR[D]	MRS-HAW[E]	MRS-TRU[F]	MRS-HRDWR[D]	MRS-HAW[E]	MRS-TRU[F]
Rail	Rural	Normal occupational fatalities	2.68E-10	2.68E-10	1.56E-10	2.68E-10	2.68E-10	1.56E-10
Rail	Rural	Normal nonoccupational fatalities	3.34E-10	3.34E-10	2.40E-10	3.34E-10	3.34E-10	2.40E-10
Rail	Rural	Accident nonoccupational fatalities	3.46E-16	2.34E-11	3.28E-17	8.50E-16	3.98E-11	3.28E-17
Rail	Suburban	Normal occupational fatalities	2.68E-10	2.68E-10	1.56E-10	2.68E-10	2.68E-10	1.56E-10
Rail	Suburban	Normal nonoccupational fatalities	1.34E-08	1.34E-08	9.66E-09	1.34E-08	1.34E-08	9.66E-09
Rail	Suburban	Accident nonoccupational fatalities	3.58E-14	2.12E-08	2.28E-14	9.80E-14	3.62E-08	2.28E-14
Rail	Urban	Normal occupational fatalities	2.68E-10	2.68E-10	1.56E-10	2.68E-10	2.68E-10	1.56E-10
Rail	Urban	Normal nonoccupational fatalities	3.20E-09	3.20E-09	2.30E-09	3.20E-09	3.20E-09	2.30E-09
Rail	Urban	Accident nonoccupational fatalities	1.80E-13	3.86E-07	4.18E-13	2.74E-13	6.64E-07	4.18E-13

[A] To convert factors to risk per mile, multiply by 1.609. Based on 1 man-rem = 2×10^{-4} latent-cancer fatality plus first- and second-generation genetic effects.

[B] Unit risk factors for dedicated-rail transportation of consolidated spent fuel packaged for shipment to either a salt repository, a tuff repository, or a basalt repository, expressed as risk per 5 railcar-kilometers.

[C] Unit risk factors for dedicated-rail transportation of the transuranic waste (TRU) generated during spent-fuel consolidation, expressed as risk per 1 railcar-kilometer.

[D] Unit risk factors for dedicated-rail transportation of spent-fuel-assembly hardware expressed as risk per 2 railcar-kilometers; packaging is the same regardless of repository site.

[E] Unit risk factors for dedicated-rail transportation of high-activity low-level waste (HAW) generated during spent-fuel consolidation, expressed as risk per 2 railcar-kilometers; packaging is the same regardless of repository site.

Table A-12. Nonradiological risk factors for shipments from MRS facility[A]

Mode	Zone	Hazard group	Consolidated spent fuel[B]	Secondary waste		
			MRS-repository	MRS-HRDWR[C]	MRS-HAW[D]	MRS-TRU[E]
Rail	Rural	Normal nonoccupational fatalities	0.00E+00	0.00E+00	0.00E+00	0.00E+00
Rail	Rural	Accident occupational fatalities	1.27E-07[F]	0.00E+00	0.00E+00	0.00E+00
Rail	Rural	Accident nonoccupational fatalities	1.85E-06	0.00E+00	0.00E+00	0.00E+00
Rail	Rural	Accident occupational injuries	1.74E-05	0.00E+00	0.00E+00	0.00E+00
Rail	Rural	Accident non-occupational injuries	3.60E-06	0.00E+00	0.00E+00	0.00E+00
Rail	Suburban	Normal nonoccupational fatalities	0.00E+00	0.00E+00	0.00E+00	0.00E+00
Rail	Suburban	Accident occupational fatalities	1.27E-07	0.00E+00	0.00E+00	0.00E+00
Rail	Suburban	Accident nonoccupational fatalities	1.85E-06	0.00E+00	0.00E+00	0.00E+00
Rail	Suburban	Accident Occupational Injuries	1.74E-05	0.00E+00	0.00E+00	0.00E+00
Rail	Suburban	Accident Non-occupational Injuries	3.60E-06	0.00E+00	0.00E+00	0.00E+00
Rail	Urban	Normal nonoccupational fatalities	6.50E-07	2.60E-07	2.60E-07	1.30E-07
Rail	Urban	Accident occupational fatalities	1.27E-07	0.00E+00	0.00E+00	0.00E+00
Rail	Urban	Accident nonoccupational fatalities	1.85E-06	0.00E+00	0.00E+00	0.00E+00
Rail	Urban	Accident Occupational Injuries	1.74E-05	0.00E+00	0.00E+00	0.00E+00
Rail	Urban	Accident Non-occupational Injuries	3.60E-06	0.00E+00	0.00E+00	0.00E+00

[A] Nonradiological risk factors per kilometer of travel. To convert factors to risk per mile, multiply by 1.609.

[B] Unit risk factors for dedicated-rail transportation of spent fuel in 100- and 150-ton casks to a salt repository, a tuff repository, or a basalt repository; expressed as risk per kilometer for normal transportation and as risk per train-kilometer for accidents.

[C] Unit risk factors for dedicated-rail transportation of spent-fuel-assembly hardware, expressed as risk per railcar-kilometer for normal transportation and as risk per train-kilometer for accidents; packaging is not affected by repository site.

[D] Unit risk factors for dedicated-rail transportation of the high-activity low-level waste (HAW) generated during the consolidation of spent fuel; expressed as risk per railcar-kilometer for normal transportation and as risk per train-kilometer for accidents.

[E] Unit risk factors for dedicated-rail transportation of the contact-handled transuranic waste (TRU) generated during the consolidation of spent fuel; expressed as risk per railcar-kilometer or normal transportation and as risk per train-kilometer for accidents.

Table A-13. Distance per shipment from selected[a] reactors and the MRS facility

Reactor	Distance (miles)					
	Salt			Tuff	Basalt	MRS
	Richton	Deaf Smith	Davis Canyon	(Yucca Mt.)	(Hanford)	(Oak Ridge)
Maine Yankee (Maine)						
Truck	1,570	2,150	2,570	3,000	3,107	1120
Rail	1,920	2,180	2,750	3,200	3,150	1480
Crystal River (Florida)						
Truck	579	1,670	2,310	2,600	2,990	639
Rail	671	1,699	2,450	3,000	3,210	698
Quad-Cities (Illinois)						
Truck	959	1,040	1,300	1,700	1,910	714
Rail	1,080	937	1,480	2,000	1,980	861
Palo Verde (Arizona)						
Truck	1,908	789	509	606	1,550	1920
Rail	1,950	933	1,790	652	1,690	2290
Trojan (Oregon)						
Truck	2,780	1,850	1,190	1,330	302	2630
Rail	2,919	2,210	1,250	1,460	301	2890
MRS facility						
Truck	NA[b]	NA	NA	NA	NA	NA
Rail	520	1,410	1,950	1,470	1,620	NA

[a] These reactors were chosen as representative of regions throughout the country.
[b] NA = not applicable.

8 0 0 0 8 1 2 0 3

Table A-14. Distance per shipment from sources of high-level waste

Source	Distance (miles)				
	Salt			Tuff	Basalt
	Richton	Deaf Smith	Davis Canyon	(Yucca Mt.)	(Hanford)
Hanford					
Truck	2,610	1660	1,010	1,150	NA[a]
Rail	2,670	1,730	1,070	1,288	NA
Idaho National Engineering Laboratory					
Truck	2,160	1,210	604	740	610
Rail	2,110	1,200	555	763	696
Savannah River Plant					
Truck	568	1,420	2,060	2,350	2,740
Rail	644	1,520	2,200	2,750	2,890
West Valley					
Truck	1,160	1,580	2,000	2,750	2,550
Rail	1,450	1,690	2,100	2,860	2,660

[a] NA = not applicable.
[b] Commercial high-level waste.

8 0 0 0 3 1 2 0 4

Table A-15. Total cask-miles for shipments in the authorized and the improved-performance systems (one-way million miles)

Mode and waste type	Repository site				
	Salt			Tuff	Basalt
	Richton	Deaf Smith	Davis Canyon	(Yucca Mt.)	(Hanford)
AUTHORIZED SYSTEM					
100% truck					
Spent fuel	67.4	94.4	115.1	141.8	149.7
Defense high-level waste	28.0	26.0	28.0	33.0	35.0
Commercial high-level waste[a]	1.0	1.0	2.0	2.0	2.0
100% rail					
Spent fuel	11.0	15.4	18.8	23.2	24.6
Defense high-level waste	6.5	6.1	6.5	7.6	8.4
Commercial high-level waste[a]	0.2	0.2	0.2	0.3	0.3
Totals					
Truck from origin	96.4	121.4	145.1	176.8	186.7
Rail from origin	17.7	21.7	25.5	31.1	33.3
IMPROVED-PERFORMANCE SYSTEM					
1. All fuel to MRS facility					
100% truck from origin					
Spent fuel	48.8	48.8	48.8	48.8	48.8
Defense high-level waste	28.0	26.0	28.0	33.0	35.0
Commercial high-level waste[a]	1.0	1.0	2.0	2.0	2.0
100% rail from origin					
Spent fuel	8.0	8.0	8.0	8.0	8.0
Defense high-level waste	6.5	6.1	6.5	7.6	8.4
Commercial high-level waste[a]	0.2	0.2	0.2	0.3	0.3
Rail from MRS facility[b]					
100-ton casks[c]	6.3	15.3	20.6	26.3	25.0
150-ton casks[c]	2.1	5.0	6.7	11.2	8.7
Totals, 100-ton casks					
Truck from origin[d]	84.1	91.1	98.9	110.1	110.8
Rail from origin	21.0	29.6	35.3	42.2	41.7
Totals, 150-ton casks					
Truck from origin[d]	79.9	80.8	85.0	95.0	94.5
Rail from origin	16.8	19.3	21.4	27.1	25.4
2. Western-reactor spent fuel to repository					
Totals, 100-ton casks					
Truck from origin[d]	83.7	85.1	90.4	99.8	101.4
Rail from origin	20.5	27.6	32.5	38.6	38.4
Totals, 150-ton casks					
Truck from origin[d]	80.0	75.8	77.0	86.4	86.8
Rail from origin	16.7	18.3	19.0	25.1	23.8

[a] Waste from West Valley Demonstration Project.
[b] All shipments in dedicated trains.
[c] Includes casks carrying secondary wastes.
[d] Totals for the improved-performance system include both truck shipments from origin to the MRS facility and dedicated-rail shipments from the MRS facility to the repository.

Table A-16. Fraction of travel in population zones from selected reactors and the MRS[a]

Reactor	Salt: Richton Truck	Salt: Richton Rail	Salt: Deaf Smith Truck	Salt: Deaf Smith Rail	Salt: Davis Canyon Truck	Salt: Davis Canyon Rail	Tuff (Yucca Mt.) Truck	Tuff (Yucca Mt.) Rail	Basalt (Hanford) Truck	Basalt (Hanford) Rail	MRS Facility Truck	MRS Facility Rail
Maine Yankee (Maine)												
Urban	.01	.02	.01	.03	.01	.01	.01	.01	.01	.02	.01	.03
Suburban	.43	.48	.35	.34	.28	.23	.26	.21	.26	.27	.48	.49
Rural	.57	.50	.64	.63	.71	.76	.74	.78	.73	.71	.51	.48
Crystal River (Florida)												
Urban	0	.01	.01	.02	0	.01	.01	.01	.01	.01	0	.01
Suburban	.19	.18	.23	.24	.22	.17	.17	.16	.19	.18	.32	.26
Rural	.81	.81	.77	.74	.78	.82	.82	.83	.80	.82	.68	.73
Quad-Cities (Illinois)												
Urban	0	.02	0	0	.01	.01	0	.01	0	.01	0	.04
Suburban	.19	.24	.18	.13	.11	.08	.12	.09	.10	.12	.33	.24
Rural	.81	.74	.82	.86	.88	.91	.88	.90	.90	.87	.67	.72
Palo Verde (Arizona)												
Urban	.01	.03	.02	.01	.02	.02	.02	.01	.02	.02	.01	.01
Suburban	.15	.19	.09	.10	.08	.20	.14	.09	.23	.25	.14	.15
Rural	.84	.78	.89	.90	.90	.78	.85	.90	.75	.73	.84	.84
Trojan (Oregon)												
Urban	0	.01	.01	.01	0	.01	0	.02	0	.01	0	.01
Suburban	.16	.11	.13	.09	.19	.14	.18	.10	.35	.17	.17	.11
Rural	.84	.88	.86	.90	.80	.85	.82	.89	.64	.82	.83	.88
MRS facility (Tennessee)												
Urban		.01		.02		.02		.02		.01		
Suburban	NA[b]	.30	NA	.16	NA	.12	NA	.12	NA	.11	NA	NA
Rural		.69		.82		.87		.86		.88		

[a] These reactors were chosen as representative of regions throughout the country.
[b] NA = not applicable.

Table A-17. Fraction of travel in population zones from high-level waste sources

	Salt						Tuff		Basalt	
	Richton		Deaf Smith		David Canyon		(Yucca Mt)		(Hanford)	
Waste source	Truck	Rail	Truck	Rail	Truck	Rail	Truck	Rail	Truck	Rail
Hanford										
Urban	.01	0	.01	.01	0	0	0	.01	NA	NA
Suburban	.16	.11	.12	.10	.19	.15	.18	.10	NA	NA
Rural	.84	.89	.87	.89	.81	.84	.82	.89	NA	NA
Idaho National Engr Lab										
Urban	0	.01	.01	.01	.01	.01	.01	.01	0	0
Suburban	.15	.10	.10	.11	.21	.22	.19	.11	.15	.12
Rural	.85	.90	.89	.88	.78	.77	.80	.88	.85	.88
Savannah River Plant										
Urban	.01	.03	.01	.02	0	.02	.01	.02	0	.01
Suburban	.30	.26	.23	.21	.22	.19	.17	.21	.19	.17
Rural	.69	.72	.76	.78	.77	.79	.82	.78	.81	.82
West Valley										
Urban	.01	.03	0	.02	.01	.02	.01	.02	.01	.01
Suburban	.32	.33	.30	.21	.22	.18	.20	.21	.21	.17
Rural	.67	.64	.70	.78	.77	.80	.79	.78	.78	.82

8 0 0 0 8 1 2 0 7

The numbers of shipments from each reactor to the repository and to the MRS facility are given in Tables A-18 and A-19, respectively. The numbers are different because of the difference in the waste-acceptance schedules for the authorized system and the improved-performance system (see Tables A-6 and A-7). Table A-20 provides information on the numbers of shipments to the repository or MRS facility and the numbers of shipments from the MRS facility.

A.8.3.8 Results of population-risk analyses

The risks of radioactive-material transportation must be evaluated for both radiological and nonradiological effects. Since a package does emit small amounts of radiation, a shipment exposes the public during all phases of its journey. People are exposed at stops and along routes even when the package is moving. In addition to the radiological effects, transportation increases the levels of air pollution. Any equivalent-weight shipment of potatoes, bricks, or other nonradioactive materials would have the same effect, but that effect must be evaluated for a complete analysis. In fact, even in most transportation accidents, the traumatic injuries and deaths resulting from an impact or a fire may far outweigh any radiological consequences. Accordingly, in evaluating the potential consequences or risk of any radioactive-material shipment, the injuries and deaths from both radiological and nonradiological causes must be considered.

Tables A-21, A-22, and A-23 summarize the results of the analysis for each of the scenarios evaluated for the authorized system and the improved-performance system. Table A-21, for the authorized system, estimates the total radiological and nonradiological risks for each of the sites and for the cases where all shipments are assumed to be made by truck or by rail. Table A-22 which estimates risks for the improved performance system, shows the results for shipments from the MRS facility in 100-ton casks, which carry disposal containers ready for emplacement in the repository and 150 ton casks which carry thin-wall canisters. Table A-23 is analogous to Table A-22 except that it presents results for the scenarios in which spent fuel from Western reactors is sent directly to the repository, rather than the MRS facility. In all scenarios it was assumed that both defense and commercial high-level waste would be shipped directly to the repository.

Results for two scenarios (the authorized system and one case for the improved-performance system) are presented in more detail in Tables A-24 through A-31. Results are presented by waste type, normal or accident conditions, and population group. Similar details are available in the report by Cashwell et al. (1985) for all scenarios evaluated for this environmental assessment.

Table A-18. Number of shipments to a repository from each reactor site (authorized system)

Reactor name	100% Truck	100% Rail	Reactor name	100% Truck	100% Rail
Farley 1	120	18	Millstone 1	804	111
Farley 2	46	7	Millstone 2	805	106
Palo Verde 1	511	72	Millstone 3	36	6
Palo Verde 2	484	70	Monticello	693	96
Palo Verde 3	448	63	Prairie Island 1	650	92
Arkansas Nuclear One 1	762	108	Prairie Island 2	631	90
Arkansas Nuclear One 2	187	27	Fort Calhoun 1	534	76
Calvert Cliffs 1	893	127	Humboldt Bay	86	12
Calvert Cliffs 2	863	122	Diablo Canyon 2	236	34
Pilgrim 1	761	105	Diablo Canyon 1	279	40
Robinson 2	581	83	Susquehanna 1	652	90
Brunswick 2	799	111	Susquehanna 2	614	85
Brunswick 1	791	109	Peach Bottom 2	1126	156
Perry 1	806	110	Peach Bottom 3	1126	156
Perry 2	747	104	Limerick 1	679	95
Dresden 1	136	18	Limerick 2	421	59
Dresden 2	909	126	Trojan	330	18
Dresden 3	825	114	Fitzpatrick	614	107
Quad Cities 1	862	119	Indian Point 3	714	102
Quad Cities 2	815	113	Seabrook 1	486	69
Zion 1	858	122	Seabrook 2	320	46
Zion 2	824	117	Salem 1	791	113
LaSalle 1	572	79	Salem 2	764	109
LaSalle 2	572	79	Hope Creek 1	509	71
Byron 1	638	88	Ginna	503	71
Byron 2	631	86	Rancho Seco 1	721	103
Braidwood 1	568	83	Summer	12	2
Connecticut Yankee	702	100	San Onofre 1	203	29
Indian Point 1	80	11	San Onofre 2	306	44
Indian Point 2	762	108	San Onofre 3	347	50
Big Rock Point	104	14	South Texas Project 1	594	82
Palisades	796	113	South Texas Project 2	592	82
Midland 2	373	49	Browns Ferry 1	699	135
Midland 1	334	46	Browns Ferry 2	695	140
La Crosse	143	19	Browns Ferry 3	986	137
Fermi 2	609	85	Sequoyah 1	444	46
Oconee 1	759	108	Sequoyah 2	425	42
Oconee 2	612	87	Watts Bar 1	518	74
Oconee 3	779	111	Watts Bar 2	524	74
McGuire 1	115	17	Bellefonte 1	444	64
McGuire 2	73	11	Bellefonte 2	327	47
Beaver Valley 1	735	104	Hartsville A1	463	65
Beaver Valley 2	272	39	Hartsville A2	328	45
Crystal River 3	676	96	Yellow Creek 1	90	13
Turkey Point 3	695	99	Yellow Creek 2	50	8
Turkey Point 4	694	99	Comanche Peak 1	412	58
St. Lucie 1	894	113	Comanche Peak 2	368	53
St. Lucie 2	486	70	Davis-Besse 1	248	31
Hatch 1	312	43	Callaway 1	360	51
Hatch 2	289	40	Vermont Yankee	675	93
Vogtle 1	547	78	Surry 1	748	102
Vogtle 2	416	60	Surry 2	620	77
River Bend 1	465	65	North Anna 1	365	47
Clinton 1	528	74	North Anna 2	295	38
Cook 1	948	135	WNP 2	650	90
Cook 2	933	133	WNP 1	394	56
Duane Arnold	562	79	WNP 3	617	89
Oyster Creek	777	108	Point Beach 1	620	88
Wolf Creek	191	27	Point Beach 2	591	84
Shoreham	270	38	Kewaunee	634	90
Waterford 3	421	61	Yankee	340	48
Maine Yankee	980	140	Brunswick 2	72	10
Three Mile Island 1	723	103	Brunswick 1	80	11
Grand Gulf 1	247	35	Morris BWR pool	150	20
Grand Gulf 2	340	48	Morris PWR pool	175	25
Cooper	771	107	West Valley BWR pool	17	2
Nine Mile Point 1	700	97	West Valley PWR pool	60	8
Nine Mile Point 2	243	33		70,553	9,927

Table A-19. Number of shipments to an MRS facility from eastern and western reactors

Reactor name	100% by Truck	100% by Rail	Reactor name	100% by Truck	100% by Rail
irley 1	307	56	Humboldt Bay[a]	86	12
irley 2	1[illegible]3	45	Diablo Canyon 2[a]	209	30
ilo Verde 1[a]	366	52	Diablo Canyon 1[a]	252	36
ilo Verde 2[a]	339	49	Susquehanna	516	71
ilo Verde 3[a]	332	47	Susquehanna 2	483	67
kansas Nuclear One 1	762	108	Peach Bottom 2	1,126	156
kansas Nuclear One 2	495	43	Peach Bottom 3	1,126	156
ilvert Cliffs 1	89[illegible]	127	Limerick 1	500	70
ilvert Cliffs 2	853	121	Limerick 2	287	40
lgrim 1	761	105	Trojan[a]	805	117
binson 2	581	83	Fitzpatrick	864	127
unswick 2	799	111	Indian Point 3	714	102
unswick 1	791	109	Seabrook 1	343	49
irris 1	160	23	Seabrook 2	177	26
rry 1	722	100	Salem 1	791	113
rry 2	579	80	Salem 2	764	109
esden 1	136	18	Hope Creek 1	365	51
esden 2	909	126	Ginna	503	71
esden 3	825	114	Rancho Seco 1[a]	721	103
ad-Cities 1	862	119	Summer	215	31
ad-Cities 2	815	113	San Onofre 1[a]	203	29
ion 1	858	122	San Onofre 2[a]	306	44
ion 2	824	117	San Onofre 3[a]	348	49
iSalle 1	669	93	South Texas Project 1	539	77
iSalle 2	632	87	South Texas Project 2	453	64
ron 1	593	85	Browns Ferry 1	944	135
ron 2	552	78	Browns Ferry 2	821	140
aidwood 1	570	81	Browns Ferry 3	986	137
aidwood 2	484	69	Sequoyah 1	588	113
nnecticut Yankee	702	100	Sequoyah 2	571	108
dian Point 1	80	11	Watts Bar 1	465	66
dian Point 2	762	108	Watts Bar 2	424	61
g Rock Point	104	14	Bellefonte 1	315	45
alisades	796	113	Bellefonte 2	199	29
idland 2	304	43	Hartsville A1	284	40
idland 1	261	37	Hartsville A2	194	26
a Crosse	143	19	Comanche Peak 1	294	42
rmi 2	609	85	Comanche Peak 2	257	33
conee 1	759	108	Davis Besse 1	321	43
conee 2	612	87	Callaway 1	260	38
conee 3	779	111	Vermont Yankee	675	93
Guire 1	334	44	Surry 1	748	106
Guire 2	268	39	Surry 2	620	88
atawba 1	241	31	North Anna 1	469	58
atawba 2	198	25	North Anna 2	420	50
aver Valley 1	735	105	WNP 2[a]	605	84
aver Valley 2	154	22	WNP 1[a]	251	36
rystal River 3	676	96	WNP 3[a]	448	63
rkey Point 3	695	99	Point Beach 1	620	88
rkey Point 4	694	99	Point Beach 2	591	84
t. Lucie 1	914	130	Kewaunee	634	90
t. Lucie 2	375	54	Yankee	340	48
atch 1	512	61	Brunswick 2	72	10
atch 2	482	57	Brunswick 1	80	11
ogtle 1	415	59	Shoreham	201	28
ogtle 2	290	41	Waterford 3	291	42
iver Bend 1	329	45	Maine Yankee	980	140
linton 1	407	57	Three Mile Island	723	103
nok 1	948	135	Grand Gulf 1	318	45
ook 2	933	133	Grand Gulf 2	210	30
rnold	572	79	Cooper	771	107
yster Creek	777	108	Nine Mile Point 1	700	97
ood Creek	184	27	Nine Mile Point 2	185	26

8 0 0 0 8 1 2 1 0

Table A-19. Number of shipments to an MRS facility from eastern and western reactors

Reactor name	100% by Truck	100% by Rail	Reactor name	100% by Truck	100% by Rail
Millstone 1	304	111	Fort Calhoun 1	534	76
Millstone 2	549	135	Morris BWR pool	150	20
Millstone 3	227	33	Morris PWR pool	175	25
Monticello	693	96	West Valley BWR pool	17	2
Prairie Island 1	650	92	West Valley PWR pool	60	8
Prairie Island 2	631	90			
			Total	70,568	9,934

* Considered a western reactor for this analysis.

8 0 0 0 8 1 2 1 1

Table A-20a. Number of cask shipments: total cask-shipments from reactors

Destination	Mode	Number of cask shipments		
		PWR	BWR	Total
Repository	100 % truck	43,611	26,942	70,553
	100 % rail	6,190	3,737	9,927
MRS facility, all spent fuel	100 % Truck	44,222	26,346	70,568
	100 % Rail	6,267	3,667	9,934
MRS facility, eastern spent fuel only	100 % Truck	40,915	24,382	65,297
	100 % Rail	5,793	3,390	9,183

Table A-20b. Number of cask-shipments: total cask shipments of consolidated spent fuel from MRS facility[a]

Destination (repository site)	Cask size (tons)	All spent fuel	Eastern fuel only
Salt sites[b]	100	8,074	7,500
	150	2,103	1,900
Tuff	100	8,050	7,500
	150	3,186	3,000
Basalt	100	6,610	6,100
	150	1,823	1,700

[a] Estimates of shipment numbers.
[b] Richton, Deaf Smith, or Davis Canyon.

8 0 0 0 8 1 2 1 2

Table A-21. Summary of the risks of transporting spent fuel and high-level wastes for disposal in the authorized system*

Mode and risk type	Salt			Tuff	Basalt
	Richton	Deaf Smith	Davis Canyon	(Yucca Mt)	(Hanford)
100% truck					
Radiological	6.3	7.9	9.5	11	12
Nonradiological	19	24	30	36	39
100% rail					
Radiological	0.2	0.2	0.3	0.3	0.3
Nonradiological	1.8	2.1	2.6	3.0	3.2

* Risks expressed in numbers of fatalities from radiological and nonradiological causes. The numbers of fatalities from radiological causes include first- and second-generation genetic effects.

Table A-22. Summary of the risks of transportation for the improved-performance system[a,b]

Mode and risk type	Richton	Deaf Smith	Davis Canyon	Yucca Mt.	Hanford
100% Truck, 100-ton cask[c,d]					
Radiological	5.3	5.4	5.4	5.7	5.7
Nonradiological	21	30	35	42	39
100% rail, 100-ton cask[d,e]					
Radiological	0.2	0.3	0.3	0.3	0.3
Nonradiological	6.9	16	22	27	24
100% truck, 150-ton cask[c,f]					
Radiological	5.3	5.3	5.4	5.7	5.7
Nonradiological	17	19	21	27	23
100% rail, 150-ton cask[e,f]					
Radiological	0.2	0.2	0.2	0.3	0.2
Nonradiological	3.0	5.4	6.9	12	7.8

[a] All spent fuel assumed to be sent first to the MRS facility and from there to the repository; all high-level waste assumed to be sent directly to the repository.

[b] Risks expressed in numbers of fatalities from radiological and nonradiological causes. The numbers of radiological fatalities include first- and second-generation genetic effects.

[c] Shipment by truck from reactors and HLW processing plants; shipment in dedicated trains from MRS facility to repository.

[d] Shipment in general-commerce trains from reactors and HLW processing plants; shipment in dedicated trains from MRS facility.

[e] The 100-ton cask carries ready-to-emplace disposal containers.

[f] The 150-ton cask carries thin-walled canisters to be encapsulated in disposal containers at the repository.

8 0 0 0 8 1 2 1 4

Table A-23. Summary of the risks of transporting for disposal in the improved-performance system[a,b]

Mode and risk type	Salt			Tuff	Basalt
	Richton	Deaf Smith	Davis Canyon	(Yucca Mt.)	(Hanford)
100% truck, 100-ton cask[c,d]					
Radiological	5.4	5.0	5.0	5.3	5.3
Nonradiological	20	28	32	39	35
100% rail, 100-ton cask[d,e]					
Radiological	0.2	0.2	0.3	0.3	0.3
Nonradiological	6.5	15	20	25	22
100% truck, 150-ton cask[c,f]					
Radiological	5.3	5.0	5.0	5.2	5.2
Nonradiological	17	18	19	24	21
100% rail, 150-ton cask[d,f]					
Radiological	0.2	0.2	0.2	0.3	0.2
Nonradiological	2.8	5.0	6.4	11	7.3

[a] Spent fuel from eastern reactors assumed to be sent first to the MRS facility and from there to the repository; spent fuel from western reactors assumed to be sent directly to the repository. All high-level waste assumed to be sent directly to the repository.

[b] Risks expressed in numbers of fatalities from radiological and nonradiological causes. The numbers of radiological fatalities include first- and second-generation genetic effects.

[c] Shipment by truck from reactors and HLW processing plants; shipment in dedicated trains from MRS facility to repository.

[d] Shipment in general-commerce trains from reactors and HLW processing plants, shipment in dedicated trains from MRS facility.

[e] The 100-ton cask carries ready-to-emplace disposal containers.

[f] The 150-ton cask carries thin-walled canisters to be encapsulated in disposal containers at the repository.

8 0 0 0 8 1 2 1 5

Table A-24. Transportation risks for authorized system from spent fuel only

Mode and risk type	Salt: Richton	Salt: Deaf Smith	Salt: Davis Canyon	Tuff (Yucca Mt.)	Basalt (Hanford)
RADIOLOGICAL RISK[a]					
Truck transportation					
Normal occupational fatalities	0.7	1.0	1.2	1.4	1.6
Normal nonoccupational fatalities	3.8	5.2	6.5	7.7	8.4
Accident nonoccupational fatalities	0.02	0.03	0.03	0.04	0.04
Total fatalities	4.6	6.2	7.7	9.2	10
Rail transportation					
Normal occupational fatalities	0.06	0.07	0.09	0.1	0.1
Normal nonoccupational fatalities	0.08	0.08	0.1	0.1	0.1
Accident nonoccupational fatalities	0.02	0.02	0.02	0.02	0.02
Total fatalities	0.2	0.2	0.2	0.2	0.2
NONRADIOLOGICAL RISK					
Truck transportation					
Normal nonoccupational fatalities	0.2	0.2	0.4	0.4	0.4
Accident occupational fatalities	2.7	3.9	5.2	6.4	6.8
Accident nonoccupational fatalities	9.6	14	18	23	24
Accident occupational injuries	5.5	7.7	10	12	13
Accident nonoccupational injuries	160	220	290	370	380
Total fatalities	13	18	24	29	31
Rail transportation					
Normal nonoccupational fatalities	0.1	0.1	0.1	0.2	0.2
Accident occupational fatalities	0.07	0.09	0.1	0.1	0.1
Accident nonoccupational fatalities	1	1.3	1.7	2.1	2.1
Accident occupational injuries	9.2	12	15	19	19
Accident nonoccupational injuries	1.9	2.4	3.2	4.0	4.0
Total fatalities	1.2	1.5	1.9	2.4	2.4

[a] Radiological fatalities include first- and second-generation genetic effects.

0 0 0 0 9 1 2 1 6

Table A-25. Transportation risks for the authorized system from high-level waste only

Mode and risk type	Salt: Richton	Salt: Deaf Smith	Salt: Davis Canyon	Tuff (Yucca Mt.)	Basalt (Hanford)
RADIOLOGICAL RISK*					
ck transportation					
Normal occupational fatalities	0.3	0.3	0.3	0.3	0.3
Normal nonoccupational fatalities	1.5	1.5	1.5	1.8	1.8
Accident nonoccupational fatalities	0.001	0.001	0.001	0.001	0.001
Total fatalities	1.8	1.8	1.8	2.1	2.1
l transportation					
Normal occupational fatalities	0.03	0.03	0.03	0.04	0.04
Normal nonoccupational fatalities	0.03	0.03	0.03	0.04	0.04
Accident nonoccupational fatalities	0.0011	0.001	0.001	0.002	0.001
Total fatalities	0.6	0.06	0.07	0.08	0.08
NONRADIOLOGICAL RISK					
ck transportation					
Normal occupational fatalities	0.02	0.1	0.05	0.1	0.02
Accident occupational fatalities	1.4	1.3	1.3	1.6	1.6
Accident nonoccupational fatalities	4.8	4.7	4.7	5.7	5.8
Accident occupational injuries	2.7	2.6	2.6	3.1	3.2
Accident nonoccupational injuries	76	75	75	90	91
Total fatalities	6.2	6.2	6.1	7.4	7.4
l transportation					
Normal occupational fatalities	0.03	0.04	0.04	0.04	0.04
Accident occupational fatalities	0.04	0.04	0.04	0.04	0.05
Accident nonoccupational fatalities	0.6	0.6	0.6	0.6	0.7
Accident occupational injuries	5.3	5.3	5.4	5.3	6.6
Accident nonoccupational injuries	1.1	1.1	1.1	1.1	1.4
Total fatalities	0.6	0.6	0.7	0.6	0.8

* Radiological fatalities include first- and second-generation genetic effects.

Table A-26. Total transportation risks for the authorized system

Mode and risk type	Salt: Richton	Salt: Deaf Smith	Salt: Davis Canyon	Tuff (Yucca Mt.)	Basalt (Hanford)
RADIOLOGICAL RISK[a]					
ck transportation					
Normal occupational fatalities	1	1.3	1.5	1.7	1.9
Normal nonoccupational fatalities	5.3	6.6	8.0	9.5	10
Accident nonoccupational fatalities	0.03	0.03	0.03	0.04	0.04
Total fatalities	6.3	7.9	9.5	11	12
il transportation					
Normal occupational fatalities	0.1	0.1	0.1	0.1	0.1
Normal nonoccupational fatalities	0.1	0.1	0.1	0.1	0.2
Accident nonoccupational fatalities	0.02	0.02	0.02	0.02	0.02
Total fatalities	0.2	0.2	0.3	0.3	0.3
NONRADIOLOGICAL RISK					
uck transportation					
Normal nonoccupational fatalities	0.2	0.3	0.4	0.6	0.4
Accident occupational fatalities	4.1	5.2	6.5	8	8.4
Accident nonoccupational fatalities	14	18	23	28	30
Accident occupational injuries	8.1	10	13	16	17
Accident nonoccupational injuries	230	300	370	450	470
Total fatalities	19	24	30	37	39
il transportation					
Normal nonoccupational fatalities	0.2	0.2	0.2	0.2	0.2
Accident occupational fatalities	0.1	0.1	0.2	0.2	0.2
Accident nonoccupational fatalities	1.5	1.8	2.2	2.6	2.8
Accident occupational injuries	14	17	21	25	26
Accident nonoccupational injuries	3	3.5	4.3	5.1	5.4
Total fatalities	1.8	2.1	2.6	3.0	3.2

[a] Radiological fatalities include first- and second-generation genetic effects.

8 0 0 0 8 1 2 1 8

Table A-27. Transportation risks for the improved-performance system from shipping spent fuel from reactors to the MRS facility[a]

Mode and risk type	Salt: Richton	Salt: Deaf Smith	Salt: Davis Canyon	Tuff (Yucca Mt.)	Basalt (Hanford)
RADIOLOGICAL RISK[b]					
Truck transportation					
Normal occupational fatalities	0.6	0.6	0.6	0.6	0.6
Normal nonoccupational fatalities	3	3	3	3	3
Accident nonoccupational fatalities	0.02	0.02	0.02	0.02	0.02
Total fatalities	3.6	3.6	3.6	3.6	3.6
Rail transportation					
Normal occupational fatalities	0.05	0.05	0.05	0.05	0.05
Normal nonoccupational fatalities	0.07	0.07	0.07	0.07	0.07
Accident nonoccupational fatalities	0.02	0.02	0.02	0.02	0.02
Total fatalities	0.1	0.1	0.1	0.1	0.1
NONRADIOLOGICAL RISK					
Truck transportation					
Normal nonoccupational fatalities	0.2	0.2	0.2	0.2	0.2
Accident occupational fatalities	2	2	2	2	2
Accident nonoccupational fatalities	7	7	7	7	7
Accident occupational injuries	4.1	4.1	4.1	4.1	4.1
Accident nonoccupational injuries	120	120	120	120	120
Total fatalities	9.1	9.1	9.1	9.1	9.1
Rail transportation					
Normal nonoccupational fatalities	0.1	0.1	0.1	0.1	0.1
Accident occupational fatalities	0.05	0.05	0.05	0.05	0.05
Accident nonoccupational fatalities	0.8	0.8	0.8	0.8	0.8
Accident occupational injuries	7	7	7	7	7
Accident nonoccupational injuries	1.4	1.4	1.4	1.4	1.4
Total fatalities	0.9	0.9	0.9	0.9	0.9

[a] Estimated risks of shipping all spent fuel from reactors to the MRS facility. The risks are the same for all four of the scenarios discussed in the text.

[b] Radiological fatalities include first- and second-generation genetic effects.

8 0 0 0 8 1 2 1 9

Table A-28. Transportation risks for the improved-performance system from shipping consolidated spent fuel from the MRS facility to the repository[a]

Risk type	Salt: Richton	Salt: Deaf Smith	Salt: Davis Canyon	Tuff (Yucca Mt.)	Basalt (Hanford)
	RADIOLOGICAL RISK[b]				
Normal occupational fatalities	0.002	0.004	0.006	0.006	0.005
Normal nonoccupational fatalities	0.02	0.02	0.02	0.03	0.03
Accident nonoccupational fatalities	0.006	0.01	0.01	0.01	0.01
Total fatalities	0.02	0.04	0.04	0.05	0.04
	NONRADIOLOGICAL RISK				
Normal nonoccupational fatalities	0.01	0.09	0.1	0.1	0.07
Accident occupational fatalities	0.3	0.9	1.3	1.6	1.4
Accident nonoccupational fatalities	5	14	19	24	21
Accident occupational injuries	47	130	180	220	190
Accident nonoccupational injuries	9.7	26	36	46	40
Total fatalities	5.4	15	20	25	22

[a] Estimated risks from shipping consolidated spent fuel from the MRS facility to the repository. All shipments assumed to be by dedicated train in 100-ton casks carrying ready-to-emplace disposal containers.

[b] Radiological fatalities include first- and second-generation genetic effects.

Table A-29. Transportation risks for the improved-performance system from shipping secondary waste from the MRS facility to the repository[a]

Type of risk	Salt: Richton	Salt: Deaf Smith	Salt: Davis Canyon	Tuff (Yucca Mt.)	Basalt (Hanford)
	RADIOLOGICAL RISK[b]				
ormal occupational fatalities	0.0008	0.001	0.0[illegible]	0.002	0.002
ormal nonoccupational fatalities	0.005	0.008	0.00[illegible]	0.01	0.014
ccident nonoccupational fatalities	0.006	0.01	0.01	0.02	0.02
Total fatalities	0.008	0.02	0.02	0.03	0.02
	NONRADIOLOGICAL RISK				
ormal nonoccupational fatalities	0.008	0.02	0.03	0.04	0.03
ccident occupational fatalities					
ccident nonoccupational fatalities					
ccident occupational injuries					
ccident nonoccupational injuries	—	—	—	—	—
Total fatalities	0.008	0.02	0.03	0.04	0.03

[a] Estimated risks of shipping secondary waste (spent-fuel-assembly hardware, high-activity low-level waste, and contact-handled transuranic waste) from the MRS facility to the repository. All secondary-waste shipments assumed to be by dedicated train in 100-ton casks.

[b] Radiological fatalities include first- and second-generation genetic effects.

Table A-30. Transportation risks for the improved-performance system from shipping high-level waste to the repository[a]

Mode and risk type	Salt: Richton	Salt: Deaf Smith	Salt: Davis Canyon	Tuff (Yucca Mt.)	Basalt (Hanford)
RADIOLOGICAL RISK[b]					
Truck transportation					
Normal occupational fatalities	0.3	0.3	0.3	0.3	0.3
Normal nonoccupational fatalities	1.5	1.5	1.5	1.8	1.8
Accident nonoccupational fatalities	0.001	0.001	0.001	0.001	0.001
Total fatalities	1.8	1.8	1.8	2.1	2.1
Rail transportation					
Normal occupational fatalities	0.03	0.03	0.03	0.04	0.04
Normal nonoccupational fatalities	0.03	0.03	0.03	0.04	0.04
Accident nonoccupational fatalities	0.001	0.001	0.001	0.002	0.001
Total fatalities	0.06	0.06	0.07	0.08	0.07
NONRADIOLOGICAL RISK					
Truck transportation					
Normal nonoccupational fatalities	0.02	0.1	0.05	0.1	0.02
Accident occupational fatalities	1.4	1.3	1.3	1.6	1.6
Accident nonoccupational fatalities	4.8	4.7	4.7	5.7	5.8
Accident occupational injuries	2.7	2.6	2.6	3.1	3.2
Accident nonoccupational injuries	76	75	75	90	91
Total fatalities	6.2	6.2	6.2	7.4	7.4
Rail transportation					
Normal nonoccupational fatalities	0.03	0.04	0.04	0.06	0.04
Accident occupational fatalities	0.04	0.04	0.04	0.05	0.05
Accident nonoccupational fatalities	0.6	0.6	0.6	0.7	0.7
Accident occupational injuries	5.3	5.3	5.4	6.9	6.6
Accident nonoccupational injuries	1.4	1.1	1.1	1.4	1.4
Total fatalities	0.63	0.64	0.66	0.84	0.79

[a] Estimated risk of shipping high-level waste directly to the repository. All shipments assumed to be in 100-ton casks.

[b] Radiological fatalities include first- and second-generation genetic effects.

8 0 0 0 8 1 2 2 2

Table A-31. Total transportation risks for the improved-performance system[a]

Mode and risk type	Salt: Richton	Salt: Deaf Smith	Salt: Davis Canyon	Tuff (Yucca Mt.)	Basalt (Hanford)
RADIOLOGICAL RISK[b]					
Truck transportation[c]					
Normal occupational fatalities	0.9	0.8	0.9	0.9	0.9
Normal nonoccupational fatalities	4.8	4.4	4.5	4.7	4.8
Accident nonoccupational fatalities	0.03	0.05	0.05	0.06	0.05
Total fatalities	5.3	5.4	5.4	5.7	5.7
Rail transportation[d]					
Normal occupational fatalities	0.09	0.09	0.09	0.1	0.1
Normal nonoccupational fatalities	0.1	0.1	0.1	0.1	0.1
Accident nonoccupational fatalities	0.03	0.04	0.04	0.05	0.04
Total fatalities	0.2	0.3	0.3	0.3	0.3
NONRADIOLOGICAL RISK					
Truck transportation[c]					
Normal nonoccupational fatalities	0.2	0.4	0.4	0.5	0.3
Accident occupational fatalities	3.7	4.3	4.6	5.2	5.0
Accident nonoccupational fatalities	17	25	30	36	33
Accident occupational injuries	54	130	180	230	200
Accident nonoccupational injuries	200	220	230	250	250
Total fatalities	21	30	35	42	39
Rail transportation[d]					
Normal nonoccupational fatalities	0.2	0.3	0.3	0.4	0.3
Accident occupational fatalities	0.4	1.0	1.4	1.7	1.5
Accident nonoccupational fatalities	6.3	15	20	25	22
Accident occupational injuries	59	140	190	240	210
Accident nonoccupational injuries	12	25	39	49	43
Total fatalities	6.9	16	22	27	24

[a] Estimated risks of shipping (1) all spent fuel from reactors to the MRS facility, (2) consolidated spent fuel from the MRS facility to the repository, (3) secondary waste from the MRS facility to the repository, and (4) high-level waste directly to the repository. All shipments from the MRS facility assumed to be in 100-ton casks.

[b] Radiological fatalities include first- and second-generation genetic effects.

[c] Shipment by truck from reactors and HLW processing plants; shipment in dedicated trains from MRS facility to repository.

[d] The 100-ton cask carries ready-to-emplace disposal containers.

8 0 0 0 8 1 2 2 3

A.8.3.9 Uncertainties

The results presented here are to be used only in comparing potential repository sites because their absolute values, though considered to be representative, have acknowledged uncertainties associated with them. Important ones include the following:

1. The risk analysis (Section A.8.2.8) was performed on a national scale, using aggregate input from large regions. As a result, these inputs are averaged and may not accurately reflect information for a specific route.

2. The packaging capacities are not known at this time nor are actual exposure rates for new casks.

3. Some inputs will be refined during the studies conducted concurrently with site characterization and during the preparation of the environmental impact statement.

A.9 COST ANALYSIS

Early efforts at defining the transportation-system equipment and operating requirements for the repository were initiated in the late 1970s, when it was recognized that transportation is an important factor in repository siting. This section summarizes the method, assumptions, and models used in analyzing the costs of waste transportation.

A.9.1 OUTLINE OF METHOD

The analysis in this environmental assessment makes use of the models developed to evaluate the costs of transporting waste to a repository. The analysis is dependent on a logistics code, WASTES, which analyzes the cost of transport and hardware requirements (Shay et al., 1985). The hardware costs, both maintenance and capital, are evaluated by using the output from WASTES. The total costs can therefore be thought of as the composite value of shipping costs, hardware capital expenditures, and maintenance allowances. All three factors are highly dependent on the assumptions underlying the analysis.

A.9.2 ASSUMPTIONS

In calculating costs, the spent-fuel discharge data published in a recent DOE report (Heeb et al., 1985) were used. In all scenarios a total of 62,000 MTU of spent fuel is shipped from individual reactor sites. The specific amounts of spent fuel to be shipped from each reactor site were selected on a yearly basis by applying the following criteria:

1. Reactors experiencing a loss of full-core-reserve (FCR) capacity within a given year were given the highest priority.

2. Reactors undergoing decommissioning were given the next highest priority 2 years after their last year of operation.

3. The oldest fuel remaining at reactors was given final priority.

The other major assumptions used in this analysis are described below (see Cashwell et al., 1985, for details).

A.9.3 MODELS

The WASTES model was used to calculate shipping costs and the size of the cask fleet. This model has been benchmarked against past analyses. A good discussion of the capabilities of WASTES is presented by Shay et al. (1985).

A.9.4 COST ESTIMATES

The costs of transporting waste in the various scenarios are shown in Table A-32. Estimates for the authorized system and two scenarios for the improved-performance system are presented in sufficient detail to show the costs of shipping the various types of waste. Only summary results are presented for the other scenarios, but details are available in the report by Cashwell et al. (1985). The results for the same two scenarios are provided in Tables A-33 and A-34 except that different detail is highlighted. In these tables, the three major cost components are shown for spent-fuel shipments only. The basis for the capital and maintenance costs is given in Tables A-35 and A-36. It should be noted in Table A-35 that the cask-maintenance costs are for 15 years--the assumed life of a cask. Table A-36 estimates the numbers of casks needed over the lifetime of the repository for each of the various scenarios.

The costs of transporting high-level waste are given in Tables A-37 and A-38 for each of the repository sites and for each mode considered.

A.9.5 LIMITATIONS OF RESULTS

The results presented should be used only to compare the potentially acceptable sites. As absolute values, they are limited for several reasons:

1. No attempt was made to escalate costs for inflation. All costs are in constant 1985 dollars.

2. The transportation-distance estimates will be affected by the selected routes.

8 0 0 0 8 1 2 2 5

Table A-32. Total transportation cost
(millions of dollars)

Mode and waste type	Repository Site				
	Richton	Deaf Smith	Davis Canyon	Yucca Mt.	Hanford
AUTHORIZED SYSTEM					
100% Truck					
Spent fuel	722	922	1,080	1,286	1,345
Defense high-level waste	207	195	214	237	254
Commercial high-level waste[a]	7	8	10	15	15
100% Rail					
Spent fuel	699	832	917	1,024	1,055
Defense high-level waste	272	279	278	308	308
Commercial high-level waste[a]	10	10	11	12	12
Totals					
Truck from origin	936	1,127	1,305	1,538	1,615
Rail from origin	982	1,122	1,207	1,345	1,376
IMPROVED-PERFORMANCE SYSTEM					
1. All fuel to the MRS facility					
100% truck from origin					
Spent fuel	600	600	600	600	600
Defense high-level waste	207	195	214	237	254
Commercial high-level waste[a]	7	8	10	15	15
100% rail from origin					
Spent fuel	594	593	593	593	593
Defense high-level waste	272	279	278	308	308
Commercial high-level waste[a]	10	10	11	12	12
Rail from MRS, 100-ton casks					
Spent fuel in disposal containers	421	638	728	800	693
Assembly hardware and high-activity waste	80	124	144	164	173
Contact-handled transuranic waste	8	9	9	10	10
Rail from MRS, 150-ton casks					
Spent fuel in disposal containers	157	212	236	412	248
Assembly hardware and high-activity waste	87	123	140	147	172
Contact-handled transuranic waste	8	9	10	10	11

Table A-32. Total transportation cost (Continued)
(millions of dollars)

Mode and waste type	Repository Location				
	Richton	Deaf Smith	Davis Canyon	Yucca Mt.	Hanford
IMPROVED-PERFORMANCE SYSTEM (Continued)					
1. All fuel to the MRS facility (Continued)					
Total cost, 100-ton casks					
Truck from origin	1,323	1,576	1,709	1,828	1,748
Rail from origin	1,384	1,654	1,767	1,889	1,792
Total cost, 150-ton casks					
Truck from origin	1,065	1,149	1,210	1,422	1,301
Rail from origin	1,127	1,227	1,268	1,483	1,345
2. Western-reactor spent fuel directly to the repository					
Total cost, 100-ton casks					
Truck from origin	1,265	1,439	1,560	1,674	1,562
Rail from origin	1,328	1,537	1,640	1,760	1,628
Total cost, 150-ton casks					
Truck from origin	1,046	1,084	1,126	1,308	1,205
Rail from origin	1,109	1,182	1,206	1,394	1,271

* High-level waste from the West Valley Demonstration Project.

8 0 0 0 8 1 2 2 7

Table A-33 Costs of transportation from reactors to repository in the authorized system[a,b] (millions of dollars)

Repository site	Shipping	Capital	Maintenance	Total
		ALL SHIPMENTS BY RAIL		
Richton	390	202	108	699
Deaf Smith	477	232	123	832
Davis Canyon	534	250	134	917
Yucca Mountain	604	275	146	1,024
Hanford	626	280	150	1,055
		ALL SHIPMENTS BY TRUCK		
Richton	442	181	99	722
Deaf Smith	595	212	116	922
Davis Canyon	717	235	128	1,080
Yucca Mountain	876	266	145	1,286
Hanford	922	274	149	1,345

[a] Spent fuel only.
[b] Values have been rounded.

8 0 0 0 8 1 2 2 8

Table A-34. Costs of transportation in the improved performance system[a,b] (millions of dollars)

Repository site	Shipping	Capital	Maintenance	Total
RAIL SHIPMENTS TO AND FROM THE MRS FACILITY				
Richton	598	248	256	1,102
Deaf Smith	799	354	212	1,365
Davis Canyon	895	277	306	1,477
Yucca Mountain	963	379	227	1,569
Hanford	906	354	211	1,471
TRUCK SHIPMENTS TO, AND RAIL SHIPMENTS FROM, THE MRS FACILITY				
Richton	623	236	250	1,108
Deaf Smith	824	342	207	1,372
Davis Canyon	919	265	300	1,485
Yucca Mountain	988	367	222	1,576
Hanford	931	342	206	1,479

[a] All spent fuel sent first to the MRS facility and from there to the repository, after consolidation. All shipments in 100-ton casks.

[b] Cost estimates do not include high-level waste, and values have been rounded.

Table A-35. Capital and maintenance costs
(millions of 1985 dollars)

Transportation mode	Capital[a]	Maintenance[b]
Reactor to MRS facility		
Truck cask	1.5	0.075
Rail cask	2.5	0.125
MRS facility to repository		
100-ton rail cask	2.5	0.125
150-ton rail cask	2.75	0.125
Rail package for transuranic waste[c]	1.6	0.075
Defense high-level waste[d]		
Truck cask	1.1	0.06
Rail cask	1.8	0.09

[a] Capital costs are for each cask and include the cost of trailer or railcar.

[b] Maintenance costs are per package-year for the assumed 15-year cask life.

[c] Based on two packages per railcar.

[d] Includes commercial high-level waste from the West Valley Demonstration Project.

8 0 0 0 8 1 2 3 0

Table A-36. Total requirements for transportation packaging
(Number of casks)

Mode and waste type	Repository site: Richton	Deaf Smith	Davis Canyon	Yucca Mt.	Hanford
AUTHORIZED SYSTEM					
100% truck					
Spent fuel	124	145	161	182	188
Defense high-level waste	40	43	48	50	53
Commercial high-level waste	2	2	2	4	4
100% rail					
Spent fuel	81	93	100	110	112
Defense high-level waste	34	36	38	42	44
Commercial high-level waste	2	2	2	2	2
IMPROVED-PERFORMANCE SYSTEM					
1. All spent fuel to the MRS facility					
100% truck from origin					
Spent fuel	106	106	106	106	106
Defense high-level waste	40	44	48	51	56
Commercial high-level waste	2	2	2	4	4
100% rail from origin					
Spent fuel	67	67	67	67	67
Defense high-level waste	34	37	38	42	47
Commercial high-level waste	2	2	2	2	2
Rail from MRS, 100-ton casks					
Spent fuel in disposal containers	55	70	75	80	70
High-activity waste	4	4	4	4	4
Contact-handled TRU waste	2	2	2	2	2
Rail from MRS, 150-ton casks					
Spent fuel in canisters	20	20	20	30	20
High-activity waste	8	8	8	6	10
Contact-handled TRU waste	2	2	2	2	2
2. Western-reactor spent fuel to the repository					
100% Truck from origin					
Spent fuel	111	108	106	105	106
Defense high-level waste	40	44	48	51	56
Commercial high-level waste	2	2	2	4	4
100% rail from origin					
Spent fuel	70	69	67	67	67
Defense high-level waste	34	37	38	42	47
Commercial high-level waste	2	2	2	2	2
Rail from MRS, 100-ton casks					
Spent fuel in disposal canisters	50	60	70	70	60
High-activity waste	4	4	4	4	4
Contact-handled TRU work	2	2	2	2	2
Rail from MRS, 150-ton casks					
Spent fuel in canisters	20	20	20	30	20
High-activity waste	8	8	8	6	8
Contact-handled TRU waste	2	2	2	2	2

8 0 0 0 8 1 2 3 1

Table A-37. Costs of transporting high-level waste by truck[a] (millions of 1985 dollars)

Source and destination	Shipping	Capital	Maintenance	Total
Savannah River Plant				
Hanford	135	48	26	210
Yucca Mountain	110	42	23	175
Deaf Smith	63	31	17	111
Richton	34	22	12	68
Davis Canyon	97	40	22	158
Hanford				
Hanford	NA	NA	NA	NA
Yucca Mountain	10	3	3	16
Deaf Smith	15	4	4	23
Richton	24	6	4	34
Davis Canyon	9	3	3	15
Idaho National Engineering Laboratory				
Hanford	26	10	8	44
Yucca Mountain	29	10	8	47
Deaf Smith	40	12	10	62
Richton	74	16	14	105
Davis Canyon	23	10	8	41
West Valley Demonstration Plant[b]				
Hanford	9	4	2	15
Yucca Mountain	8	4	2	15
Deaf Smith	5	2	1	9
Richton	4	2	1	7
Davis Canyon	7	2	1	10

[a] Values have been rounded.

[b] Commercial high-level waste.

8 0 0 0 8 1 2 7 2

Table A-38. Costs of transporting high-level waste by rail[a]
(Millions of 1985 dollars)

Source and destination	Shipping	Capital	Maintenance	Total
SRP to				
Hanford	142	65	32	240
Yucca Mountain	126	54	27	208
Deaf Smith	92	43	22	157
Richton	56	32	16	105
Davis	118	50	25	193
Hanford to				
Hanford	NA	NA	NA	NA
Yucca Mountain	15	5	4	25
Deaf Smith	20	5	4	30
Richton	26	7	5	39
Davis	14	5	4	24
INEL to				
Hanford	44	14	11	69
Yucca Mountain	48	16	12	77
Deaf Smith	64	16	12	92
Richton	91	22	16	129
Davis	39	13	10	61
West Valley to				
Hanford	7	4	2	12
Yucca Mountain	7	4	2	12
Deaf Smith	5	3.6	2	10
Richton	4	4	2	10
Davis	6	4	2	11

[a] Values have been rounded.

8 0 0 0 8 0 1 2 3 3

3. Published tariffs were used in this analysis where available; however, under the deregulation that has recently occurred, the DOE will be able to negotiate with carriers for rates and services, and shipping costs may change.

A.10 BARGE TRANSPORTATION TO REPOSITORIES

The most likely way in which barge transportation would be used to make shipments to a repository would be to complete a partial leg of the journey. In all cases, barges cannot be loaded directly from the reactor-pool loading area without the use of heavy-haul truck equipment or a railcar. In the barge scenario for eastern reactors evaluated by Tobin and Meshkov (1985), it was considered likely that a reactor within 483 kilometers (300 miles) of a large port capable of handling large railcasks and served by a railroad would ship by rail and then use a barge through an intermodal transfer. The eastern reactors for which barge transport was considered to be a feasible option are listed in Table A-39. The shipment from the reactor would then proceed as far as possible by barge, and then another intermodal transfer would occur back to a railroad. This transfer point was assumed to be either in the Gulf of Mexico or on the Mississippi River. Therefore, the shipment would arrive at the repository by railcar. The possible exception where barge loadings and unloadings could be made directly would be a specially designed cask-handling facility at the MRS facility. Because a barge has tremendous capacity (equivalent to at least four rail casks), it is highly inefficient to use small truck casks.

The results given in Table A-40 for the risk from barge transportation generally show that barge transportation increases occupational exposure for normal operations during the shipment of spent fuel. Because barge shipments require intermodal transfer at both ends of the journey, the workers involved in this activity receive relatively high radiation doses and account for the large increase in occupational exposure over the rail mode. The exposure of the public is also increased by the intermodal transfers.

The results presented in Table A-40 are a first attempt at characterizing barge transportation. The numbers are expected to be refined as further studies are conducted to provide models of similar detail as those available for the truck and rail modes. As in previous studies for truck and rail modes, when data are not well characterized, assumptions are made that tend to overpredict the actual values. However, reactor-specific results presented by Tobin and Meshkov (1985) suggest that under several circumstances the barge mode may reduce risk.

Tobin and Meshkov did not investigate the consequences of barge accidents because a previous study (Unione et al., 1978) was found to contain analyses for barge accidents that were similar to those used by Sandquist et al. (1985) for truck and rail accidents. The results of that study are shown in Tables A-41 and A-42. These results can be compared with the equivalent categories in Table A-5. Table A-42 is comparable to results for water release. The results show accidents from barges to be of the same order as for other modes.

8 0 0 0 8 1 2 3 4

Table A-39. Reactor sites included in barge study

Direct to water[a]				Rail to water[b]	
Transfer at Houston[c]		Transfer at Memphis[d]		Transfer at Houston	
Plant	State	Plant	State	Plant	State
runswick	North Carolina	Big Rock Point	Michigan	Hatch	Georgia
alvert Cliffs	Maryland	Browns Ferry	Alabama	McGuire	North Carolina
rystal River	Florida	Cook	Michigan	North Anna	Virginia
ariey	Alabama	Davis-Besse	Ohio	Peach Bottom	Pennsylvania
ndian Point	New York	Dresden	Illinois	Robinson	South Carolina
laine Yankee	Maine	Fitzpatrick	New York	Summer	South Carolina
Hillstone	Connecticut	Ginna	New York	Susquehanna	Pennsylvania
yster Creek	New Jersey	Kewaunee	Wisconsin	Three Mile Island	Pennsylvania
ilgrim	Massachusetts	Nine Mile Point	New York	Vermont Yankee	Vermont
alem	New Jersey	Palisades	Michigan		
t. Lucie	Florida	Point Beach	Wisconsin		
urry	Virginia	Sequoyah	Tennessee		
urkey Point	Florida	Zion	Illinois		

[a] Plants located on a waterway.
[b] Plants located within 300 miles of port.
[c] Shipments to Houston are by ocean.
[d] Shipments to Memphis are by inland waterway.

8 10 10 0 8 0 1 1 2 3 5

Table A-40. Projected latent cancers for shipments to repositories from reactors with barge access[a,b]

Type of transfer	Deaf Smith		Yucca Mountain		Hanford	
	Barge/rail	All rail	Barge/rail	All rail	Barge/rail	All rail
Offshore to Gulf of Mexico						
Nonoccupational	0.03	0.02	0.04	0.03	0.05	0.03
Occupational	0.09	0.014	0.1	0.02	0.1	0.02
Inland waterways to Mississippi River						
Nonoccupational	0.02	0.01	0.03	0.02	0.03	0.015
Occupational	0.08	0.01	0.08	0.015	0.08	0.015
Rail to water and Gulf of Mexico						
Nonoccupational	0.05	0.01	0.06	0.01	0.06	0.01
Occupational	0.05	0.007	0.06	0.01	0.06	0.01
Total, 35 reactor sites						
Nonoccupational	0.10	0.04	0.13	0.05	0.14	0.06
Occupational	0.22	0.03	0.24	0.05	0.24	0.05
Total	0.32	0.07	0.37	0.10	0.38	0.10

[a] Considers shipments from reactors listed in Table A-39 according to schedule given by Tobin and Meshkov (1985).

[b] Analysis was made only for three potential repository sites.

8 0 0 0 8 1 2 3 6

Table A-41. Summary of the radiological air-release consequences of airborne releases from barge accidents[a]

Accident class[c]	Latent-cancer fatalities[b] Average	Maximum
4	$5 \times 10^{-[illegible]}$	2×10^{-3}
5	6×10^{-8}	2×10^{-4}
6	0.01	0.2

[a] Estimates based on data presented by Unione et al. (1978, Table 6.4).

[b] Based on the assumption that a population dose of 1 man-rem induces 0.0002 latent-cancer fatality plus first- and second-generation genetic effects.

[c] Accident classes from Wilmot et al. (1983).

Table A-42. Summary of the radiological consequences of waterborne releases from barge accidents[a]

Specific dose pathway	Latent-cancer fatalities[b]
Drinking water	1.0
Fresh-water fish	4
Shoreline deposits	0.02
Irrigated crops	0.1
Total of all pathways	5

[a] Estimates based on data presented by Unione et al. (1978, Table 6.16).

[b] Based on the assumption that a population dose of 1 man-rem induces 0.0002 latent-cancer fatality plus first-and second generation genetic effects.

Shipping by barge may be more expensive than the rail mode. Tobin and Meshkov suggest that shipping spent fuel by barge and rail to a repository could cost from $18 to $47 per kilogram of uranium, but these numbers are high because new cost estimates for casks are lower than those used in their study. If values from Table A-35 are substituted, the adjusted cost for barge transportation becomes $27 to $34 per kilogram of uranium. This compares with a range for rail of $13 to $17 per kilogram of uranium, or approximately half the barge and rail cost. The barge-and-rail cost can be reduced by adding more casks to each barge; Tobin and Meshkov assume four railcasks on a barge. It is feasible to ship at least six casks on a barge.

A primary objective of the Tobin and Meshkov study was to determine whether barge transportation is a discriminating factor in site selection. It can be inferred, however, from Table A-40 and from the preliminary estimates of cost per kilogram of uranium shipped that barge transportation will augment the other modes and will be used in special circumstances where the other modes are not available. Since all shipments in the region of the repository site will be completed by rail or truck even if barges are used, no site has a significant advantage because of its proximity to a nearby port. For example, the Richton site may appear to be better than Yucca Mountain because of its proximity to the Gulf of Mexico, but there is no advantage because a shipment to either site must be completed by rail. Similarly, barges on the Columbia River could arrive within about 16 miles of the Hanford site, but this option does not appear reasonable or probable for eastern reactors because of the additional crew exposure, cost, and time required to complete a shipment via the Panama Canal. Administrative concerns, including safeguarding and travel through foreign countries, add to the unlikeliness of this option. As can be seen in Figure A-4, some reactors west of the longitude 100°W could ship to the Hanford site using intermodal transfers. The Trojan plant in Oregon as well as the Humboldt Bay and Diablo Canyon plants in California could possibly ship directly if the proper dock facilities were available. It is not likely that a barge can land at San Onofre in California. Power plants in Arizona and the Rancho Seco plant in California are also not likely to ship by barge because rail shipments would have to be made to a suitable port. In each case, this port is likely to be densely populated, and therefore there is little incentive to use barges.

No additional insight for ranking sites is gained from Table A-40. At this preliminary stage in the evaluation of the barge mode for its feasibility and safety, it is concluded that the barge option is not a discriminating element in comparing sites.

A.11 EFFECT OF THE SECOND REPOSITORY ON TRANSPORTATION ESTIMATES

The analyses that have been discussed to this point (see Section A.8.3) do not explicitly consider the effect of the second repository; however, the siting guideline on transportation requires the second repository to be considered in the cost and risk analyses. A supplementary analysis was performed to predict the expected uncertainty in the results for a single repository when a second repository is added to the waste-management system.

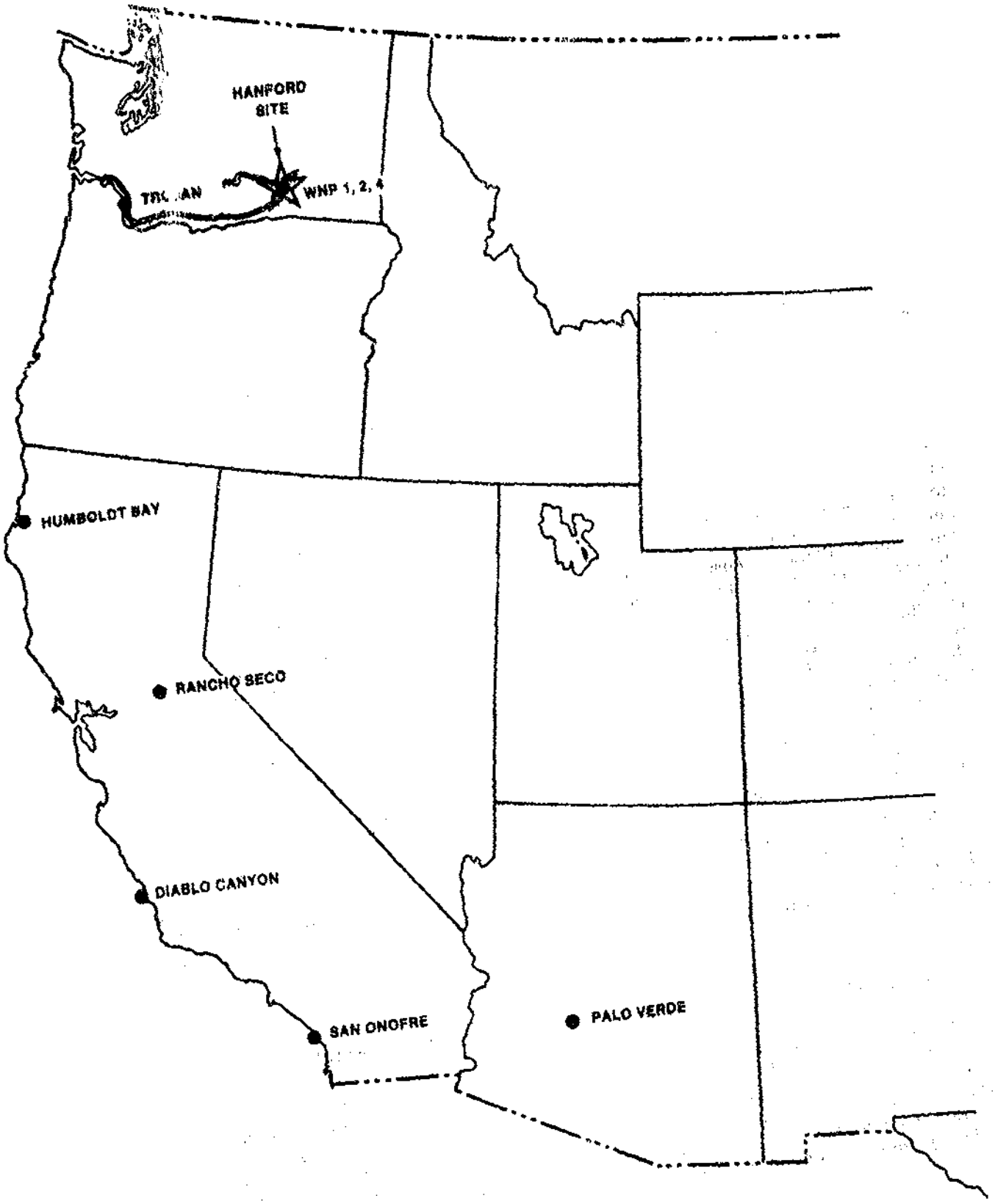

Figure A-4. Reactors west of 100° W longitude.

2 0 0 0 0 8 1 1 2 3 9

A.11.1 SINGLE-REPOSITORY ANALYSES

The impacts resulting from shipments from reactors to the repository have been evaluated for both the authorized system and the improved-performance system.

In the authorized system, spent fuel and high-level waste are shipped directly to the repository. The spent fuel that was assumed to be shipped is generally the oldest fuel, except when a reactor that is running out of storage capacity is given preference. The geographic location of the fuel is not considered.

In the scenarios analyzed for the improved-performance system, similar assumptions were made about the fuel that is shipped, but the fuel is sent first to the MRS facility and then to the repository. Four variations of the improved-performance system were considered. The first two assumed that all of the spent fuel that is received by the repository is routed through the MRS facility. These two variations differ only in the size of the cask assumed to be used for shipments from the MRS facility to the repository (100 and 150 tons). Defense high-level waste is sent directly to the repository; it does not pass through the MRS facility.

Two other variations were generated by taking into account the geographic distribution of some of the fuel. In these variations, about 4,500 MTU of spent fuel from the reactors west of the Rockies is sent to the first repository without passing through the MRS facility. The remaining fuel is preferentially selected by age except for cases where reactors have no storage capacity. These two variations are also distinguishable because two different cask sizes were assumed for each.

None of the variations of the improved-performance system or the authorized system fully consider the geographic distribution of fuel; some do not consider it at all.

A.11.2 LOGIC SUPPORTING THE SUPPLEMENTARY ANALYSIS

If a second repository is introduced into the waste-management system, the spent fuel that will be sent to the first repository can be chosen not only for the age of the fuel but also for the proximity of the fuel to the repository. Logic and the mandate of the Act appear to dictate that fuel closest to the first repository should be shipped to it, with the remainder being shipped to the second repository. When an MRS facility is added to the waste-management system, the ideal fuel selection for the first repository would be the fuel farthest from the second repository (approximately nearest the first repository).

The second repository will enter the system several years after the first. Consequently, its effect on the population of reactors shipping to the first repository will be somewhat reduced because the reactors with storage problems would likely not be restricted from shipment to a more distant first repository as long as their storage problems remained. The supplementary analysis more closely represents a system that simultaneously has two

8 0 0 0 8 1 2 4 0

repositories in operation and therefore will manifest the greatest effect of regionality on the transportation impacts.

A.11.3 DESCRIPTION OF SUPPLEMENTARY ANALYSES

Two separate analyses were performed: one that considered the MRS facility and another that did not. For each analysis, two cases were considered: (1) the first repository receives spent fuel from reactors closest to it and (2) the first repository receives spent fuel from reactors farthest from it (Figure A-5). Only Yucca Mountain is shown in Figure A-5; however, similar figures were generated for analyses for each of the five sites nominated as suitable for characterization.

The major assumptions are as follows:

- The cumulative spent-fuel quantities were assumed to be those of the "midcase" projection by the DOE's Energy Information Administration (EIA).
- Estimates based on adjusted "great circle" distances.
- Use of 150-ton casks for shipments from the MRS facility.
- All spent fuel routed through the MRS facility.
- Only spent fuel was assumed to be shipped.

The results are presented in Table A-43. Only cask-miles were calculated because cask-miles are a good surrogate measure of transportation costs and risks. Table A-44 contains the percentage variation from the single-repository values. It can be seen that the introduction of a second repository can produce a significant effect on the results for a single-repository analysis.

A.12 CRITERIA FOR APPLYING THE TRANSPORTATION GUIDELINE

The siting guideline on transportation (10 CFR 960.5-2-7) contains a number of terms that are subject to interpretation. These terms are underlined in Table A-45, which is a complete listing of both the favorable and the potentially adverse conditions of the guideline. Terms like "short," "economical," "cuts," and "fills" are clearly open to interpretation. These common terms generally defy the application of accepted objective definitions.

Early in the process of implementing the guideline, it was recognized that a consistent set of criteria was needed to apply the transportation guideline. In September 1984, an ad hoc transportation group was established to deal with transportation issues in the environmental assessments (EAs). The group included a member from the DOE Project Offices representing the three host rocks considered for the first repository and representing substantial expertise in the transportation of radioactive waste. One member had been instrumental in drafting the guideline itself. Before the issuance of the draft EAs, this group developed criteria for applying favorable conditions 1, 2, and 3 and potentially adverse conditions 1 and 3. These

8 0 0 0 3 1 2 4 1

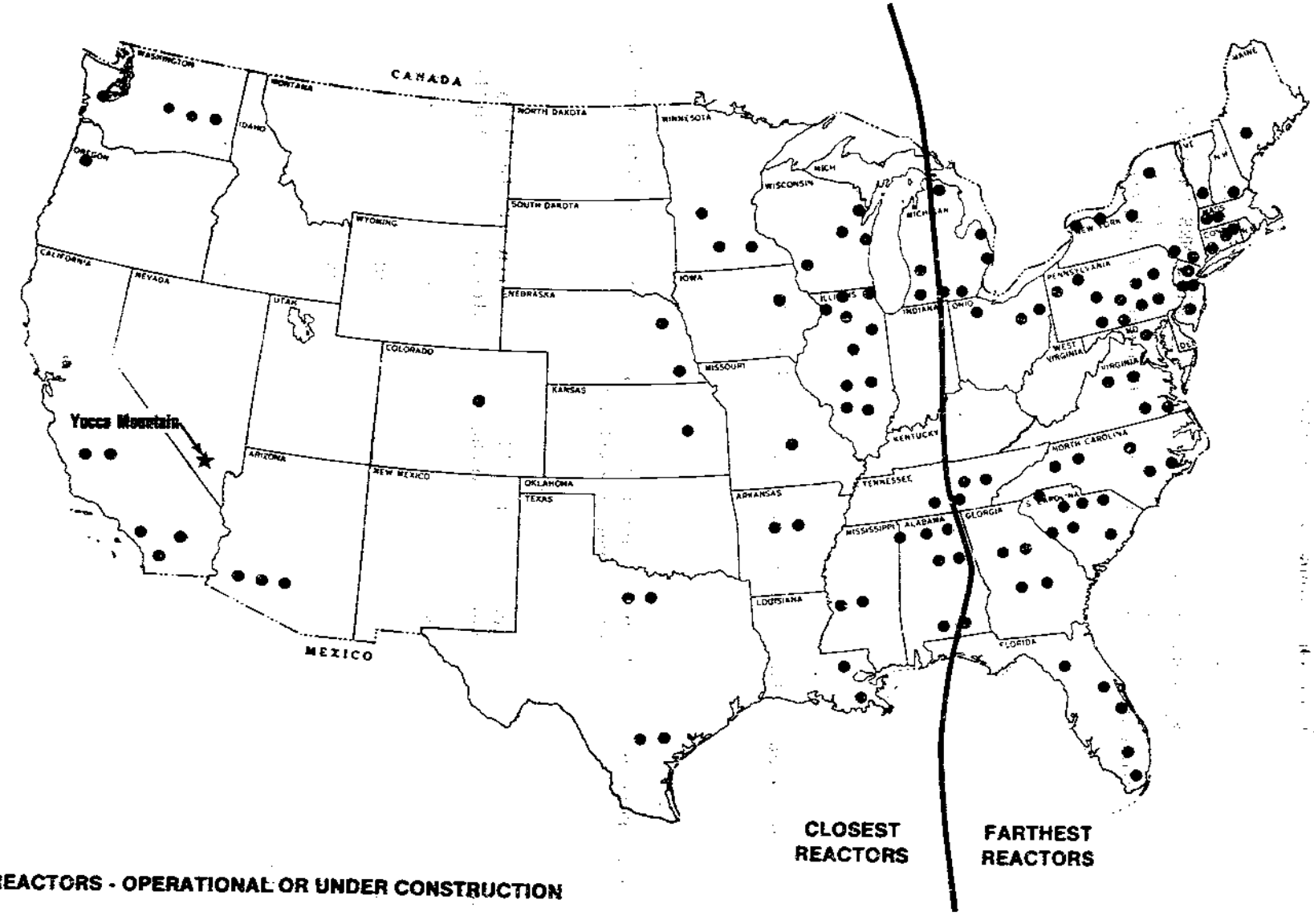

Figure A-5. Analysis of shipping from farthest and closest reactors to Yucca Mountain.

Table A-43. Cask-miles from reactors to potential repository locations with and without an MRS facility[a] (Millions of cask-miles)

Repository site	Without MRS facility			With MRS facility		
	Closest	EA Analysis	Farthest	Closest	EA Analysis	Farthest
Richton	6.5	11.0	15.3	5.1	9.2	14.0
Deaf Smith	11.6	15.4	18.7	6.8	10.9	15.7
Davis Canyon	14.1	18.8	22.7	7.8	11.9	16.7
Yucca Mountain	17.4	23.2	27.6	11.4	15.6	20.3
Hanford	19.2	24.6	28.9	8.6	12.8	17.5

[a] Estimates based on the shipment of 62,000 MTU of spent fuel.

Table A-44. Percent variation in cask-miles resulting from the introduction of second repository

Repository site	Without MRS facility		With MRS facility	
	Closest	Farthest	Closest	Farthest
Richton	-46	+40	-44	+52
Deaf Smith	-30	+23	-38	+44
Davis Canyon	-29	+22	-34	+40
Yucca Mountain	-29	+21	-27	+30
Hanford	-25	+19	-33	+37

8 0 0 0 8 1 2 4 3

Table A-45. Criteria for applying the transportation guideline

---

FAVORABLE CONDITIONS

(1) Availability of access routes from local existing highways and railroads to the site which have any of the following characteristics:

(i) Such routes are relatively short and economical to construct as compared to access routes for other comparable siting options.

(ii) Federal condemnation is not required to acquire rights-of-way for the access routes.

(iii) Cuts, fills, tunnels, or bridges are not required.

(iv) Such routes are free of sharp curves or steep grades and are not likely to be affected by landslides or rock slides.

(v) Such routes bypass local cities and towns.

Criterion

All parts of this favorable condition pertain to the access route to the repository. The access route is the road or railspur that must be constructed to connect existing roads or track with the site. Only one part need be present.

(i) The favorable condition is present if the access route is less than 10 miles long and costs less than $10 million. These criteria are applied to truck and rail routes separately.

(ii) If any part of the access route must be constructed over private land, it is assumed that Federal condemnation will be required, and the favorable condition is not present

(iii) All road or track construction requires cuts and fills. Cuts and fills for generally flat terrain are considered acceptable. The favorable condition is not present if bridges or tunnels are required.

(iv) The favorable condition is present if the access road is constructed over generally flat terrain.

(v) The favorable condition is not present if the access route passes through a highly populated area, as defined in 10 CFR Part 960, Subpart A, or 960.5-2-1(c)(2) (Federal Register, Vol. 49, pp. 47754 and 47763, respectively).

8 0 0 0 8 1 2 4 4

Table A-43. Criteria for applying the transportation guideline (Continued)

---

(2) Proximity to local highways and railroads that provide access to regional highways and railroads and are adequate to serve the repository without significant upgrading or reconstruction.

Criterion

This favorable condition pertains to that segment of existing track between the outer end of the access route and the nearest State, Federal, or interstate highway and the nearest mainline railroad that does not require upgrading or repair. This segment of road or track should be no longer than 10 miles and cost no more than $10 million.

(3) Proximity to regional highways, mainline railroads, or inland waterways that provide access to the national transportation system.

Criterion

This distance refers to the length of the road or track between the outer end of the access route and the nearest State, Federal, or interstate highway or the nearest mainline railroad. This distance should be no more than 30 miles. Distance to a waterway is not considered because a barge shipment would have to offload onto a railroad.

(4) Availability of a regional railroad system with a minimum number of interchange points at which train crew and equipment changes would be required.

Criterion

All sites have at least one railroad interchange point at the point where the site spur joins the mainline. All other interchanges within 125 miles of the site will be counted. The site with the fewest interchanges will be considered to have the favorable condition present.

(5) Total projected life-cycle cost and risk for transportation of all wastes designated for the repository site which are significantly lower than those for comparable siting options, considering locations of present and potential sources of waste, interim storage facilities, and other repositories.

Criterion

All sites will be compared; only one site will have the favorable condition present.

3 0 0 0 3 1 2 4 5

Table A-45. Criteria for applying the transportation guideline (Continued)

6) Availability of regional and local carriers--truck, rail, and water--which have the capability and are willing to handle waste shipments to the repository.

riterion

his favorable condition is present if any carrier--truck, rail, or water--is vailable within the minimum transportation study area.

7) Absence of legal impediment with regard to compliance with Federal regulations for the transportation of waste in or through the affected State and adjoining States.

riterion

his favorable condition will be addressed as explained in Appendix C.

8) Plans, procedures, and capabilities for response to radioactive waste transportation accidents in the affected State that are completed or being developed.

riterion

ny evidence that emergency-response plans, procedures, and capabilities exist ill be favorable. Evidence for all of these is required for a finding that he favorable condition is present.

9) A regional meteorological history indicating that significant transportation disruptions would not be routine seasonal occurrences.

riterion

he repository activity is significantly disrupted if it is not able to meet ts annual acceptance rate.

Table A-45. Criteria for applying the transportation guideline (Continued)

POTENTIALLY ADVERSE CONDITIONS

(1) Access routes to existing local highways and railroads that are expensive to construct relative to comparable siting options.

Criterion

An expensive access route is considered to be one that costs more than $10 million.

(2) Terrain between the site and existing local highways and railroads such that steep grades, sharp switchbacks, rivers, lakes, landslides, rock slides, or potential sources of hazard to incoming waste shipments will be encountered along access routes to the site.

Criterion

This potentially adverse condition is present if the terrain over which the access route must pass is not generally flat and if the access route must cross a river or lake.

(3) Existing local highways and railroads that could require significant reconstruction or upgrading to provide adequate routes to the regional and national transportation system.

Criterion

This potentially adverse condition is present if a significant reconstruction or upgrading of a truck or rail route costs more than $10 million. This criterion is applied separately to truck and rail routes.

(4) Any local condition that could cause the transportation-related costs, environmental impacts, or risk to public health and safety from waste transportation operations to be significantly greater than those projected for other comparable siting options.

Criterion

Examples of local conditions that are potentially adverse are proximity to a bombing range, extreme costs, and despoiling of the environmental and aesthetic qualities of pristine land.

8 0 0 0 8 1 2 4 7

criteria were applied during the ranking process documented in Chapter 7 of the draft EAs.

The process by which the criteria were developed relied heavily on the collective transportation expertise of the ad hoc group. Rules-of-thumb were often used to make estimates in the context of indefinite terms. For example, the cost of a mile of new highway or railroad track is often assumed to be $1 million when the route traverses flat terrain. Such an estimate might be used when much additional information is not available. The application of such rules, experience, and informed judgment allowed more-definitive criteria to be developed while considering the requirement to judge transportation conditions in the context of "comparable siting options." In other words, the criteria values were developed by fully considering the range and distribution of values for all of the five sites nominated as suitable for characterization.

The comments on the draft EAs noted other inconsistencies in the findings reported for the transportation guideline, particularly for the conditions that contain the term "regional". The DOE then decided to develop criteria for all of the conditions in the transportation guideline. Through repeated discussions with the ad hoc committee members, the final criteria presented in Table A-45 were promulgated in August 1985. Again, the process of criteria development relied on the judgment of the transportation ad hoc group.

A.13 COMMON QUESTIONS REGARDING TRANSPORTATION

A.13.1 PRENOTIFICATION

Many States wish to be notified in advance of certain radioactive-waste shipments.

Whether prenotification results in an increase in safety is the subject of considerable discussion among Federal regulatory agencies and State and local governments. Currently, the NRC, under Congressional mandate, requires NRC licensees to notify States in advance of spent-fuel and certain radioactive-waste shipments (10 CFR 71.97 and 73.37(f)). The DOT requires postnotification of shipments (49 CFR 173.22(d)). In an effort to understand the issue and to gauge the efficacy of the NRC regulation, the DOE sponsored a study (Pellettieri and Welles, 1985). Currently, the DOE and the DOT have completed a joint study that surveyed the State, local, and facility notification requirements for hazardous materials (Dively et al., 1985).

The DOE currently provides State officials with generic notification of its shipments of radioactive material. This notification reviews the type and quantity of shipments but does not designate the time and the date of shipment. For current shipments in support of the OCRWM research and development program, the DOE is supplementing this generic notification with courtesy communications to an appropriate officer of each State through which the shipment will pass. In light of the number of spent-fuel shipments to repositories, the DOE will evaluate its current procedures for tracking radioactive-waste shipments and consider a number of additional options. For

example, an effective real-time shipment-tracking system may be a preferable alternative to prenotification. Decisions will be based on the best technology available and applicable laws and regulations in use at the time of shipment to a waste-management facility.

A.13.2 EMERGENCY RESPONSE

Emergency response to a transportation accident involving radioactive material is another concern of State and local officials.

State and local jurisdictions have the primary responsibility for emergency response to incidents occurring in connection with all hazardous materials, including spent-fuel shipments. Federal assistance can be provided in many ways, however. For example, the DOE will make available from its resources such radiological advice and assistance as is requested and appropriate to protect public health and safety and to cope with radiological hazards. DOE personnel will respond to requests from NRC licensees; Federal, State, and local authorities; and private persons or companies, including carriers. Assistance can be obtained from any one of eight DOE regional centers, which are capable of responding to radiological incidents on a 24-hour basis. Requests for aid are handled directly through the DOE regional centers or through an emergency clearing house called CHEMTREC (Chemical Transportation Emergency Center) that is sponsored and funded by the chemical industry. The DOE offices, when requested, will provide radiation assistance teams.

For States hosting facilities developed under the Act, the DOE will seek to negotiate written agreements that can address assistance and funding for emergency-response preparations. In other States, funding or assistance in lieu of funding (e.g., training courses, equipment, etc.) will continue to be available through the Federal Emergency Management Agency (FEMA) or other Federal agencies. Examples of the type of assistance already provided by the Federal Government are the emergency-response workshops for first responders sponsored by the DOE at various locations in the country each year as part of its compliance training program.

The FEMA has coordinated the development of the interim Federal Radiological Emergency Response Plan (Federal Register, Vol. 49, p. 35896). The interim plan outlines procedures to be taken in the event of nuclear accidents, including those involving the transportation of radioactive waste, and is designed to provide coordinated Federal response in support of State and local governments. Under the plan, State and local governments have the primary responsibility for responding to emergencies; Federal technical assistance is provided on request. In addition, the FEMA has published interim Guidance for Developing State and Local Radiological Emergency Response Plans and Preparedness for Transportation Accidents (FEMA, 1983). This guidance, which is currently being revised, provides a basis for State and local governments to develop emergency plans and improve emergency preparedness for transportation accidents involving radioactive materials.

A.13.3 HIGHWAY ROUTING

A.13.3.1 Highway routing regulations

The routing of radioactive-waste shipments is a primary concern of State, local, and tribal officials. On January 19, 1981, the DOT by its authority under the Hazardous Materials Transportation Act, published a final rule governing the highway routing of radioactive materials. Designated HM-164, this rule has been codified as 49 CFR Parts 171, 172, 173, and 177. The DOE will, of course, comply with all DOT regulations.

According to HM-164, highway carriers of "highway route controlled quantity radioactive materials" (e.g., spent nuclear fuel) are required to use "preferred routes." A preferred route consists of an interstate highway, including the use of interstate beltways or bypasses when available to avoid city centers, or alternative routes that are designated by a State routing agency (which includes the appropriate authorities of Indian Tribes). State-designated alternative routes must be selected in accordance with DOT guidelines for selecting preferred highway routes (DOT, 1984) or an equivalent routing analysis that adequately considers the overall risk to the public.

The DOT stated that it followed three basic concepts in devising a highway-routing framework for radioactive materials:

1. Route selection should be based on some valid measure of reduced risk to the public.

2. Uniform and consistent rules for route selection are needed from both a practical and a safety standpoint.

3. Local views should be carefully considered in routing decisions because routing is a site-specific activity unlike other transportation controls, such as marking and packing (Federal Register, Vol. 46, p. 5299).

The DOT's approach to routing acknowledges that public policy for the routing of radioactive materials should be based on a consideration of the overall risk involved in transporting such materials. The risk depends on such factors as accident rates, total travel time, traffic patterns, population density, road conditions, time of travel, and driver training. Further, the DOT recognized the need to balance local and national interests in routing decisions while providing for uniformity and consistency of transportation regulations. With regard to the acknowledged need to provide for local input in routing decisions, the DOT provided for the designation of alternative routes to interstate highways by State routing agencies in consultation with affected localities, neighboring States, and Indian Tribes and in accordance with DOT guidelines, to ensure the consideration of all impacts and continuity of designated routes.

Carriers of spent fuel may deviate from a preferred route under the following three circumstances:

1. Emergency conditions that would make continued use of the preferred route unsafe.

2. To make necessary rest, fuel, and vehicle-repair stops.

3. To the extent necessary to pick up, deliver, or transfer a large-quantity package of radioactive materials (49 CFR 177.825(b)(2)).

HM-164 has numerous other provisions designed to ensure the safe highway shipment of radioactive materials. These include the requirement for the provision of written route plans to the shipper and specific driver-training requirements, which include knowledge of procedures to be followed in an accident or other emergency.

There are several methods by which the DOE can support the highway-routing efforts of the States and the DOT. On request, the DOE will assist the States as practicable in the evaluation and determination of State-designated alternative routes. The DOE, as the shipper of record, will continue to notify its carriers of the State-designated alternative routes and will instruct that these routes be used during all shipments. Moreover, the carrier will be instructed that all safety and routing requirements must be met and that lack of compliance will result in appropriate sanctions, including the potential suspension of carriers (41 CFR 109-40.103-1). Federal and State reports of carrier performance, postnotification of routes, and DOE tracking of actual shipments will provide mechanisms by which operations can be monitored. In addition to diligent and consistent observance of these currently available procedures, the DOE will continue to coordinate with the States concerning the routing of any highway route controlled quantities (49 CFR 173.403) of radioactive materials shipped by the DOE.

A.13.3.2 State and local ordinances

As discussed in the preceding section, the DOT derives its authority to regulate hazardous-materials transportation principally from the Hazardous Materials Transportation Act (HMTA). The HMTA (Section 112(a)) preempts "...any requirement of a state or political subdivision thereof, which is inconsistent with any requirement set forth in [the HMTA] or regulations issued under [the HMTA]." Thus, State or local actions are not necessarily precluded; only those that are "inconsistent" are preempted. The DOT can, however, grant an exemption from this blanket preemption provision to allow an inconsistent State or local requirement to remain in effect. Such an exemption can be granted if, mainly because of local considerations, the requirement (1) affords an equal or greater level of protection to the public than is afforded by the requirements of the HMTA or of regulations issued under the HMTA and (2) does not unreasonably burden commerce.

In its general discussion of the highway-routing rule, the DOT notes its conclusion that "the public risks in transporting [radioactive] materials by highway are too low to justify the unilateral imposition by local governments of bans and other severe restrictions on the highway mode of transportation" (Federal Register, Vol. 46, p. 5299).

8 0 0 0 8 1 2 5 1

Appendix A to 49 CFR Part 177 delineates DOT policy regarding the consistency of State and local rules with DOT highway-routing requirements for the purpose of advising State or local governments how they can exercise their responsibilities with respect to the regulation of motor carriers. The DOT generally regards State and local requirements to be inconsistent if they--

- Prohibit the transportation of large-quantity radioactive materials by highway between any two points without providing an alternative route for the duration of the prohibition.
- Conflict with NRC or DOT physical-security requirements.
- Require additional or special personnel, equipment, or escort.
- Require additional or different shipping paper entries, placards, or other hazard-warning devices.
- Require filing route plans or other documents containing information that is specific to individual shipments.
- Require prenotification.
- Require accident or incident reporting other than as immediately necessary for emergency assistance.
- Unnecessarily delay transportation.

A.13.4 RAILROADS

A.13.4.1 Railroad routing

There are no regulatory requirements for the routing of rail shipments. Rail-shipment routes depend largely on the railroad to which the shipment is originally consigned and how that (and each successive) railroad handles interconnections with other railroads.

A.13.4.2 Rail regulations

Several government agencies perform inspection-and-enforcement activities to promote the safe transportation of radioactive materials on the nation's railroads. Since rail is a predominantly interstate mode of transportation, the Federal Government has long been considered the entity best equipped to develop, promulgate, and enforce a uniform set of safety regulations for the transportation of hazardous materials by rail.

The safety and safeguards regulations for shipments of radioactive material by rail, in many cases, are the same as those for highway shipments. The NRC has issued general routing guidelines for rail shipments of spent

8 0 0 0 8 1 2 5 2

fuel, which are included in its physical-protection requirements that were promulgated to guard against acts of sabotage for both rail and truck spent-fuel shipments. The DOT has issued specific rules limiting both the number and the duration of rail stops and designating the placement of cars carrying spent fuel in the makeup of the train. In addition, there are standards for track quality and other operating features of importance to safety of rail transport.

Shippers who prepare material for rail transportation are required to comply with DOT regulations found in 49 CFR Part 173 before offering any hazardous material shipment to a carrier. The responsibilities of rail carriers of radioactive waste are outlined in DOT regulations 49 CFR Part 174. In accepting a shipment, the carrier inspects it visually to ascertain that the hazardous material is not leaking, that specific rail equipment (air and handbreaks, journal boxes, and trucks) is working properly, and that appropriate placards are provided. The carrier cannot accept packages that are leaking or damaged. In addition to the DOT requirements, rail companies inspect railcars periodically to ensure that they are mechanically safe for operation. In particular, certain equipment is routinely inspected at interchange points by the carrier.

Carrier operations are also subject to DOT regulations covering safety enforcement procedures, track safety standards, and accident-reporting procedures. Under the conditions of 49 CFR 171.15 and 171.16, the carrier must notify the DOT immediately of any unintentional release of a hazardous material during the course of transportation and must submit a written hazardous materials incident report to DOT within 15 days of such an event.

Although jurisdiction over the transport of radioactive waste by rail is vested primarily in the Federal Government, States and local governments that wish to assume specific responsibilities in this area also have a role. The Federal Rail Safety Act (45 U.S.C. 434) directs that a State may enforce its own railroad safety regulation provided that the State regulation is (1) consistent with Federal regulations, (2) necessary to eliminate or reduce an essentially local safety hazard, and (3) not a burden on the free flow of interstate commerce.

The DOE's Office of Civilian Radioactive Waste Management (OCRWM) is investigating means for facilitating a cooperative effort among affected Federal and State agencies and the railroad industry in forging shipping arrangements that are safe, efficient, and equitable. There appears to be a strong willingness by all affected parties to work toward this goal.

The DOE will reinforce the DOT's and the NRC's inspection-and-enforcement activities through the establishment of a comprehensive quality-assurance and quality-control program to address each aspect of the transportation process, including the integrity of the shipping casks and the procedures for handling the casks. The quality-assurance program will implement systematic procedures designed to ensure and provide demonstrable evidence that program goals, such as safety, reliability, and maintainability, are achieved in a cost-effective manner.

8 0 0 0 8 1 2 5 3

A.13.4.3 Dedicated trains

The use of "dedicated trains" involves the designation of specific equipment (locomotives, cask cars, buffer cars, and cabooses) for the use of a particular commodity between fixed origin and destination points. In many respects, it is similar to the "sole-use" vehicle that is commonly employed by motor carriers for specific commodities (one example is the transportation of bulk, low-specific-activity radioactive material).

Special arrangements to expedite the movement of dedicated trains can be made among railroads. For example, the equipment "dedicated" for sole use may be owned by the originating carrier. This equipment could be used for the full length of the move. There may be no switching or interchange with other carriers at terminals along the route. After delivery, the empty cars are returned to the origin for the next movement, possibly under the same expedited process as the loaded train. The originating carrier and the carriers that own and operate the rail lines to be used by the dedicated train would agree on the apportionment of revenues among themselves for the entire move.

A.13.5 INSURANCE COVERAGE FOR TRANSPORTATION ACCIDENTS

The Price-Anderson Act of 1957 (42 U.S.C. Sections 2014 and 2210, as amended) provides extensive liability coverage for damages suffered by the public in the event of nuclear accidents at certain facilities (which include commercial nuclear power reactors and DOE contractor-operated facilities) or accidents that occur in the course of transportation to or from such facilities. Liability coverage extends to all potentially responsible parties (except, in some instances, the Federal Government, whose liability would be covered under the Federal Tort Claims Act) and is not limited to parties who actually purchase insurance or enter into indemnity agreements with the Federal Government.

State law is generally used to determine liability and the extent of damages in the event of a nuclear incident; the Price-Anderson Act in turn establishes a system for paying for those damages. The Act places restrictions on the use of State law in the event of an "extraordinary nuclear occurrence" (ENO) at certain facilities--an occurrence that involves substantial offsite releases of radiation and is likely to result in substantial offsite damages to persons or property. When the Federal Government determines that an extraordinary nuclear occurrence has occurred, certain defenses available under State law must be waived. One waiver requires the imposition of strict liability, without proof of negligence on the part of any responsible party. Defenses related to governmental immunity are also waived. The Price-Anderson Act further declares that in the event of an extraordinary nuclear occurrence, defenses based on statutes of limitations will be waived if a suit is brought within "three years from the date that the claimant first knew, or reasonably could have known, of his injury or damage and the cause thereof, but in no event more than twenty years after the date of a nuclear incident." A State statute of limitations that allows a greater period of time for filing suit would remain in effect.

8 0 0 0 8 1 2 5 4