DOE/EIS-0503

Final New England Clean Power Link Project Environmental Impact Statement Volume I

U.S. DEPARTMENT OF ENERGY
OFFICE OF ELECTRICITY DELIVERY AND ENERGY RELIABILITY
WASHINGTON, DC

OCTOBER 2015

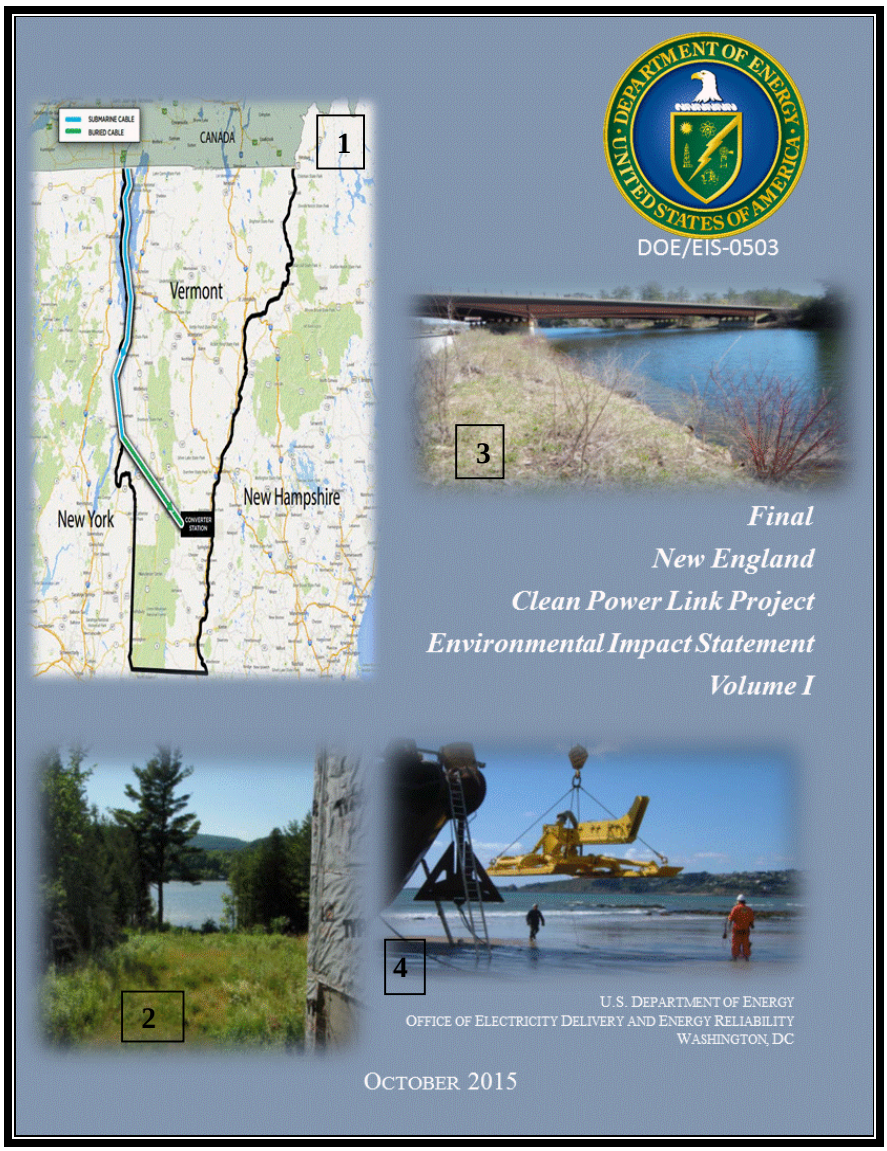

Cover Photo Credits

1. TDI-NE (*http://wamc/files/styles/default/public/201410/new-england-clean-power-link-map-ctsy-tdi-new-england.jpg" alt="">)*
2. NECPL exit from Lake Champlain (Benson, Vermont) courtesy of TDI-NE
3. Lake Bomoseen, Fair Haven, Vermont courtesy of TDI-NE
4. TDI-NE 2014a

FINAL

NEW ENGLAND CLEAN POWER LINK PROJECT
ENVIRONMENTAL IMPACT STATEMENT

DOE/EIS-0503

VOLUME I: IMPACT ANALYSES

U.S. DEPARTMENT OF ENERGY
OFFICE OF ELECTRICITY DELIVERY
AND ENERGY RELIABILITY

COOPERATING AGENCIES

U.S. ENVIRONMENTAL PROTECTION AGENCY
U.S. ARMY CORPS OF ENGINEERS
U.S. COAST GUARD

OCTOBER 2015

This Page Intentionally Left Blank

COVER SHEET

RESPONSIBLE FEDERAL AGENCY
U.S. Department of Energy (DOE),
Office of Electricity Delivery and Energy Reliability

COOPERATING AGENCIES
U.S. Environmental Protection Agency (EPA), U.S. Army Corps of Engineers (USACE), U.S. Coast Guard (USCG)

TITLE
New England Clean Power Link Transmission Line Project Final Environmental Impact Statement (EIS) (DOE/EIS-0503)

LOCATION
Grand Isle, Chittenden, Addison, Rutland, and Windsor counties in Vermont

CONTACTS
For additional information on this Final EIS contact:
Mr. Brian Mills, National Environmental Policy Act (NEPA) Document Manager
Office of Electricity Delivery and Energy Reliability, OE-20
U.S. Department of Energy
Washington, DC 20585
Telephone: (202) 586-8267
Brian.Mills@hq.doe.gov

ABSTRACT: Champlain VT, LLC, d/b/a Transmission Developers Inc. - New England (TDI-NE) applied to the U.S. Department of Energy (DOE) to construct, operate and maintain a 154-mile long electric transmission line in the United States from the border with Canada, near the town of Alburgh, Vermont. The New England Clean Power Link (NECPL) Project would consist of one 1,000-megawatt, high voltage direct current (HVDC) transmission line and a new converter station in Ludlow, Vermont. This Environmental Impact Statement (EIS) addresses the potential environmental impacts of the proposed transmission line (Preferred Alternative) and the No Action Alternative. The proposed transmission cable would include both aquatic (underwater) and terrestrial (primarily underground) segments in Vermont. The underwater portions of the transmission cable would be buried in the beds of Lake Champlain, and the terrestrial portions would be buried, principally in roadway rights-of-way and railway beds. The transmission cable would consist of two transmission cables. A new converter station in Ludlow, Vermont, would convert the electrical power from DC to alternating current (AC) and interconnect to Vermont Electric Power Company's existing substation in Cavendish, Vermont.

PUBLIC COMMENTS: Comments on the Draft EIS were accepted for a 60-day period following publication of EPA's Notice of Availability (NOA) in the *Federal Register* on June 12, 2015. The DOE held two public meetings on the Draft EIS (July 15, 2015 in South Burlington, Vermont and July 16, 2015 in Rutland, Vermont). All comments were considered during preparation of the Final EIS. ***Appendix M–Comment Response Document*** of this Final EIS contains revisions and new information based in part on comments received on the Draft EIS. Vertical bars in the margins marking changed text indicate the locations of these revisions and new information. Deletions are not indicated.

The Final EIS analyzes the potential environmental impacts of the DOE issuing a Presidential permit for the proposed NECPL Project, which is DOE's proposed Federal action (Preferred Alternative). If the DOE determines that granting a Presidential permit is in the public interest, the information contained in this Final EIS will also help to inform the DOE's decision regarding potential mitigation measures and other conditions of the permit. Copies of the Final EIS are available for public review at 11 local libraries as noted in ***Appendix B–EIS Distribution List*** of the Final EIS or a copy may be requested from Mr. Brian Mills. The Final EIS also is available on the NECPL Project EIS Web site (http://necplinkeis.com/). The DOE will announce its decision on the Proposed Action in a Record of Decision (ROD) in the *Federal Register* no sooner than 30 days after EPA publishes the NOA of the Final EIS.

Table of Contents

Cover Sheet....i
Table of Contents....iii
List of Appendices....vi
Table of Figures....vi
Table of Tables....vii
Summary....S-1
S.1 Background....S-1
S.2 DOE's Purpose of and Need for Agency Action....S-2
S.3 Applicant's Objectives....S-2
S.4 Public Participation and Interagency Coordination....S-2
S.5 Alternatives Analyzed....S-6
S.5.1. No Action Alternative....S-6
S.5.2. DOE's Proposed Action....S-7
S.6 Proposed NECPL Project Overview....S-7
S.6.1. Construction and Schedule....S-11
S.6.1.1. Aquatic Transmission Cable Installation....S-11
S.6.1.2. Terrestrial Direct Current Transmission Cable Installation....S-13
S.7 Alternatives Considered but Eliminated from Further Detailed Analysis....S-15
S.7.1. Collocating the Cables....S-15
S.7.2. Other Alternatives....S-15
S.7.3. Conservation and Demand Reduction Measures....S-15
S.7.4. Transmission Technologies....S-15
S.8 Summary of Potential Effects Associated with the Proposed NECPL Project....S-16
1 Purpose of and Need for the Action....1-1
1.1 Background....1-1
1.2 DOE's Purpose of and Need for Agency Action....1-2
1.3 DOE's Proposed Action....1-2
1.4 TDI-NE's Objectives....1-2
1.5 Public Participation and Interagency Coordination....1-3
1.5.1 Public Scoping....1-4
1.5.2 Issues Outside the Scope of this EIS – Canada....1-5
1.5.3 Interagency Coordination....1-5
1.5.4 Federal, State, and Local Authorizations and Approvals....1-5
1.5.5 Draft EIS Public Review....1-7
1.6 Organization of this Final EIS....1-8
2 Proposed Action and Alternatives....2-1
2.1 Proposed Action....2-1
2.2 No Action Alternative....2-1
2.3 Proposed NECPL Project Overview....2-1
2.3.1 Issuance of the Certificate of Public Good....2-7
2.4 Proposed NECPL Project Location, Design, and Construction Methods....2-7
2.4.1 Description of Route Segments....2-7
2.4.2 Aquatic Direct Current Transmission Cable....2-8
2.4.3 Horizontal Directional Drilling....2-11
2.4.4 Terrestrial Direct Current Transmission Cable....2-12
2.4.5 Ludlow HVDC Converter Station....2-15
2.4.6 Coolidge Substation Interconnection....2-15
2.4.7 Construction and Schedule....2-15
2.4.8 Decommissioning....2-21

2.5 Alternatives Considered but Eliminated from Further Detailed Analysis 2-21
2.5.1 Collocating the Cables 2-21
2.5.2 Other Alternatives 2-22
2.5.3 Transmission Technologies 2-22
2.6 Summary of Potential Effects of the Proposed NECPL Project 2-23
3 Affected Environment 3-1
3.1 Lake Champlain Segment 3-1
3.1.1 Land Use 3-1
3.1.2 Transportation and Traffic 3-3
3.1.3 Water Resources and Quality 3-5
3.1.4 Aquatic Habitats and Species 3-11
3.1.5 Aquatic Protected and Sensitive Species 3-13
3.1.6 Terrestrial Habitats and Species 3-15
3.1.7 Terrestrial Protected and Sensitive Species 3-16
3.1.8 Terrestrial Wetlands 3-18
3.1.9 Geology and Soils 3-19
3.1.10 Cultural Resources 3-21
3.1.11 Infrastructure 3-24
3.1.12 Recreation 3-26
3.1.13 Public Health and Safety 3-27
3.1.14 Noise 3-33
3.1.15 Hazardous Materials and Wastes 3-35
3.1.16 Air Quality 3-36
3.1.17 Socioeconomics 3-40
3.1.18 Environmental Justice 3-42
3.2 Overland Segment 3-45
3.2.1 Land Use 3-45
3.2.2 Transportation and Traffic 3-46
3.2.3 Water Resources and Quality 3-48
3.2.4 Aquatic Habitats and Species 3-48
3.2.5 Aquatic Protected and Sensitive Species 3-53
3.2.6 Terrestrial Habitats and Species 3-55
3.2.7 Terrestrial Protected and Sensitive Species 3-57
3.2.8 Terrestrial Wetlands 3-61
3.2.9 Geology and Soils 3-62
3.2.10 Cultural Resources 3-63
3.2.11 Infrastructure 3-69
3.2.12 Recreation 3-79
3.2.13 Public Health and Safety 3-79
3.2.14 Noise 3-81
3.2.15 Hazardous Materials and Wastes 3-82
3.2.16 Air Quality 3-83
3.2.17 Socioeconomics 3-83
3.2.18 Environmental Justice 3-85
4 Environmental Consequences of the No Action Alternative 4-1
5 Environmental Consequences of the Proposed NECPL Project 5-1
5.1 Lake Champlain Segment 5-1
5.1.1 Land Use 5-1
5.1.2 Transportation and Traffic 5-1
5.1.3 Water Resources and Quality 5-4
5.1.4 Aquatic Habitats and Species 5-8

5.1.5 Aquatic Protected and Sensitive Species 5-14
5.1.6 Terrestrial Habitats and Species 5-18
5.1.7 Terrestrial Protected and Sensitive Species 5-19
5.1.8 Terrestrial Wetlands 5-20
5.1.9 Geology and Soils 5-20
5.1.10 Cultural Resources 5-23
5.1.11 Infrastructure 5-24
5.1.12 Recreation 5-27
5.1.13 Public Health and Safety 5-28
5.1.14 Noise 5-30
5.1.15 Hazardous Materials and Wastes 5-33
5.1.16 Air Quality 5-34
5.1.17 Socioeconomics 5-35
5.1.18 Environmental Justice 5-38
5.2 Overland Segment 5-38
5.2.1 Land Use 5-38
5.2.2 Transportation and Traffic 5-40
5.2.3 Water Resources and Quality 5-42
5.2.4 Aquatic Habitats and Species 5-44
5.2.5 Aquatic Protected and Sensitive Species 5-45
5.2.6 Terrestrial Habitats and Species 5-46
5.2.7 Terrestrial Protected and Sensitive Species 5-49
5.2.8 Terrestrial Wetlands 5-52
5.2.9 Geology and Soils 5-57
5.2.10 Cultural Resources 5-59
5.2.11 Infrastructure 5-60
5.2.12 Recreation 5-63
5.2.13 Public Health and Safety 5-64
5.2.14 Noise 5-65
5.2.15 Hazardous Materials and Wastes 5-68
5.2.16 Air Quality 5-69
5.2.17 Socioeconomics 5-71
5.2.18 Environmental Justice 5-71
6 Cumulative and Other Impacts 6-1
6.1 Cumulative Impacts Analysis 6-1
6.1.1 Other Actions Considered for Potential Cumulative Impacts 6-1
6.1.2 Cumulative Impacts 6-5
6.1.3 Water Resources and Quality 6-5
6.1.4 Aquatic Habitats and Species 6-6
6.1.5 Aquatic Protected and Sensitive Species 6-7
6.1.6 Terrestrial Habitats and Species 6-7
6.1.7 Terrestrial Protected and Sensitive Species 6-7
6.1.8 Geology and Soils 6-7
6.1.9 Cultural Resources 6-8
6.1.10 Infrastructure 6-8
6.1.11 Recreation 6-8
6.1.12 Public Health and Safety 6-9
6.1.13 Air Quality 6-9
6.1.14 Noise 6-9
6.1.15 Socioeconomics 6-9
6.2 Unavoidable Adverse Environmental Effects 6-10

6.3 Relationship Between Short-Term Uses of the Environment and the Maintenance and Enhancement of Long-Term Productivity 6-10
6.4 Irreversible and Irretrievable Commitments of Resources 6-10
6.5 Conflicts Among the Proposed NECPL Project and the Objectives of Federal, Regional, State, and Local Land Use Plans, Policies, and Controls 6-12
6.6 Energy Requirements and Conservation Potential 6-12
6.7 Natural or Depletable Resource Requirements and Conservation Potential 6-12
6.8 Effects on Urban Quality, Historical and Cultural Resources, and the Design of the Built Environment, including Reuse and Conservation Potential 6-12
7 List of Preparers 7-1
8 References 8-1
9 Acronyms and Abbreviations 9-1
10 Glossary 10-1
11 Index 11-1

LIST OF APPENDICES

Appendix A Scoping Summary Report
Appendix B EIS Distribution
Appendix C Detailed Maps of the NECPL Project Transmission System
Appendix D Project Route Alternatives Considered but Eliminated from Further Analysis
Appendix E CWA Section 404 and Section 10 Permit
Appendix F Vermont 248 Application Cover Letter
Appendix G Applicant Proposed General Mitigation Measures
Appendix H ESA Section 7 Documentation
Appendix I NHPA Section 106 Documentation
Appendix J Environmental Justice Analysis Background
Appendix K Air Quality Analysis Background
Appendix L Contractor Disclosure Statement
Appendix M Comment Response Document

TABLE OF FIGURES

Figure S-1 NECPL Project Overview S-3
Figure 2-1 Overview of Alburgh Segment from Canada to Lake Champlain 2-2
Figure 2-2 NECPL Project Overview 2-5
Figure 2-3 Example Aquatic HVDC Transmission Cable Cross-Section 2-9
Figure 2-4 Representative Schematic of Protection Measures for Aquatic Transmission Cables 2-10
Figure 2-5 Typical Articulated Concrete Mats 2-10
Figure 2-6 Example HDD Techniques 2-11
Figure 2-7 Typical HDD Landfall Drill Rig Operation 2-12
Figure 2-8 Example Terrestrial HVDC Transmission Cable Cross-Section 2-13
Figure 2-9 Cross-section of Underground system 2-14
Figure 2-10 A Typical Staging Area for Construction Equipment in A Roadway ROW 2-14
Figure 2-11 Typical Aquatic Transmission Cable Installation Process 2-16
Figure 2-12 Example of Water Jet Trenching (Jet Plow) Device 2-17
Figure 2-13 Typical Cable Plow Dimensions 2-18
Figure 3-1 Lake Champlain Ferry Routes 3-4

Figure 3-2 Regions of Lake Champlain Segment 3-9
Figure 3-3 Recreational Area and Activities 3-29
Figure 3-4 Major Stream Crossings in the Overland segment 3-51
Figure 3-5 NECPL Proposed Electrical Line Crossings....3-71
Figure 3-6 Water Source Protection Areas 3-73
Figure 3-7 NECPL Proposed Project Santiary Sewer Line Crossings 3-77
Figure 4-1 Percent of Fuel Types used to Produce New England's Electic Energy from 2000 to 2024 4-2
Figure 6-1 Proposed Green Line Infrastructure Alliance Project Route 6-2

TABLE OF TABLES

Table S-1 Summary of Project Route....S-8
Table S-2 Summary of Potential Effects of the Proposed NECPL Project S-17
Table 1-1 Proposed NECPL Project Presidential Permit Application Milestones....1-3
Table 1-2 Public Scoping Meeting Dates and Locations 1-4
Table 1-3 Potential Permits and Approvals Associated with the Proposed NECPL Project....1-6
Table 1-4 Sections and Appendices in the NECPL Project Final EIS 1-8
Table 2-1 Summary of Project Route....2-8
Table 2-2 Summary of Potential Effects of the Proposed NECPL Project 2-23
Table 3-1 Region of Influence for NECPL Project Resources 3-2
Table 3-2 Nutrient Criteria for Class A(1), Class A(2), and Class B Waters 3-8
Table 3-3 2013 Lake Champlain Minimum and Maximum Values of Key Water Quality Parameters 3-11
Table 3-4 Common Fish Species in Lake Champlain and their Life History Characteristics 3-14
Table 3-5 Federal and State Protected Terrestrial Wildlife Species that May Occur within the Lake Champlain Segment ROI....3-17
Table 3-6 Known Cultural Resources in the APE for the Lake Champlain Segment....3-24
Table 3-7 Magnetic Field Levels of Various Household Appliances 3-33
Table 3-8 Noise Levels from Common Sources....3-34
Table 3-9 Ambient Air Quality....3-38
Table 3-10 2011 Lake Champlain Segment Air Emissions Inventory....3-40
Table 3-11 Population Summary for the Lake Champlain Segment....3-41
Table 3-12 Overview of 2012 Employment by Industry for Lake Champlain Segment*....3-41
Table 3-13 2013 Unemployment for Lake Champlain Segment 3-42
Table 3-14 Demographic Makeup of Grand Isle, Chittenden, Addison, and Rutland Counties Compared to Vermont 3-43
Table 3-15 2013 Poverty level in the Lake Champlain Segment Compared to Vermont 3-44
Table 3-16 2013 Percent of Low-Income Population in the Lake Champlain Segment Compared to Vermont....3-44
Table 3-17. Habitats and Land Cover Types Occurring in the ROI of the Overland Segment 3-46
Table 3-18 Common Submerged Aquatic Vegetation Species in Vermont Waters 3-49
Table 3-19 Vermont-listed Threatened and Endangered Fish Species, Status, and Habitat....3-55
Table 3-20 Observed Non-Native Invasive Species within the Overland Segment ROI....3-56
Table 3-21 Potentially Significant Natural Communities within the Overland Segment ROI....3-57
Table 3-22 Vermont-Listed Terrestrial Plant Species Identified within the Overland Segment ROI.....3-58
Table 3-23 Federal and State Protected Terrestrial Wildlife Species that May Occur within the Overland Segment ROI 3-59
Table 3-24 Known Archaeological Sites in the Overland Segment Area of Potential Effect 3-67

Table 3-25 Field Identified Archaeological Resources in the Overland Segment Area of Potential Effect 3-68
Table 3-26 State Register and National Historic Architectural Properties in the Overland Segment Area of Potential Effect 3-69
Table 3-27 2011 Overland Segment Air Emissions Inventory 3-83
Table 3-28 Overland Segment Population Summary 3-84
Table 3-29 2013 Overland Segment Overview of Employment by Industry 3-85
Table 3-30 2013 Overland Segment Unemployment 3-85
Table 3-31 2013 Overland Segment Demographics for Rutland and Windsor Counties Compared to Vermont 3-86
Table 3-32 2013 Poverty Levels for Rutland and Windsor Counties Compared to Vermont 3-86
Table 3-33 2013 Percent of Low-Income Population in the Overland Segment Compared to Vermont 3-87
Table 4-1 2013-2014 ISO-New England's Vermont State Profile of Electrical Generation Sources 4-3
Table 5-1 Summary of Modeled Water Quality parameters as a Result of Cable Installation in Lake Champlain 5-6
Table 5-2 Noise Produced by Typical Construction Equipment.....5-31
Table 5-3 Peak One-hour Duration Noise Levels Typical of Construction on Water.....5-32
Table 5-4 Estimated Air Emissions Resulting from Construction Activities in the Lake Champlain Segment 5-34
Table 5-5 Estimated Greenhouse Gas Emissions Resulting from Construction Activities in the Lake Champlain Segment.....5-35
Table 5-6 Proposed Clearing in Potentially Significant Communities along the Overland Segment 5-48
Table 5-7 Proposed Effects on Wetlands and Wetland Buffers within the Project Area 5-52
Table 5-8 Noise Levels Typical of Construction on Land.....5-67
Table 5-9 Estimated Air Emissions Resulting from Construction Activities in the Overland Segment 5-70
Table 5-10 Estimated Greenhouse Gas Emissions Resulting from Construction Activities in the Overland Segment 5-70
Table 6-1 Present and Reasonably Foreseeable Power Generation Projects Identified in 2015.....6-4
Table 6-2 Present and Reasonably Foreseeable Transmission Projects 6-5

SUMMARY

S.1 BACKGROUND

The proposed New England Clean Power Link (NECPL) Transmission Line Project (Project) consists of an approximately 154-mile long, 1,000-megawatt (MW), high-voltage direct current (HVDC) electric power transmission system that will have both aquatic (underwater) (≈ 98 miles) and terrestrial (underground) (56 miles) segments in the state of Vermont. The Project includes a transmission cable that would run from the United States and Canada border to Ludlow, Vermont, and associated equipment. The Project would terminate at the existing Vermont Electric Power Company (VELCO) substation in Cavendish, Vermont, and interconnect with the transmission system operated by Independent System Operator New England (ISO-New England). In addition to the transmission line itself, the system would include a new direct current (DC)-to-alternating current (AC) HVDC converter station in the town of Ludlow, Vermont.

On May 20, 2014, Champlain VT, LLC, d/b/a Transmission Developers, Inc.-New England (TDI-NE) applied to the U.S. Department of Energy (DOE) for a Presidential permit in accordance with Executive Order (EO) 10485, as amended by EO 12038, and the regulations at *10 Code of Federal Regulations* (CFR) 205.320 et seq. (2000), "Application for Presidential Permit Authorizing the Construction, Connection, Operation, and Maintenance of Facilities for Transmission of Electric Energy at International Boundaries." TDI-NE submitted a minor route revision on October 9, 2014.

As required by 10 CFR 205.320(a), any entity "who operates an electric power transmission or distribution facility crossing the border of the United States, for the transmission of electric energy between the United States and a foreign country, shall have a Presidential Permit, in compliance with EO 10485, as amended by EO 12038." EO 10485, as amended by EO 12038, authorizes the Secretary of Energy "[u]pon finding the issuance of the permit to be consistent with the public interest, and, after obtaining the favorable recommendations of the Secretary of State and the Secretary of Defense thereon, to issue to the applicant, as appropriate, a permit for [the] construction, operation, maintenance, or connection" of "facilities for the transmission of electric energy between the United States and a foreign country." The DOE determines whether issuing a Presidential permit would be consistent with the public interest and assesses the environmental effects of the proposed project, the effect of the proposed project on electric reliability, and other factors that the DOE considers relevant to the public interest.

The DOE Office of Electricity Delivery and Energy Reliability is responsible for reviewing Presidential permit applications and determining whether to grant a permit for electrical transmission facilities that cross the United States' international border. If the DOE issues the Presidential permit to TDI-NE (OE Docket Number PP-400), it would authorize TDI-NE to construct, operate, maintain, and connect the United States' portion of the Project at the international border near the village of Alburgh, Vermont.

The DOE determined that issuance of a Presidential permit would constitute a major federal action and that an Environmental Impact Statement (EIS) is the appropriate level of environmental review under the National Environmental Policy Act (NEPA) of 1969 (42 United States Code [U.S.C.] 4321 et seq.). The DOE prepared this EIS in compliance with NEPA requirements, the Council on Environmental Quality's (CEQ) regulations for implementing NEPA (40 CFR Parts 1500-1508), the DOE's implementing procedures for NEPA (10 CFR Part 1021), and other applicable regulations, including Compliance with Floodplain and Wetland Environmental Review Requirements (10 CFR Part 1022). This Final EIS contains revisions and new information based in part on comments received on the Draft EIS. Vertical bars in the margins marking changed text indicate the locations of these revisions and new information. Deletions are not indicated.

Other environmental review requirements are being implemented in coordination with or integrated with the NEPA process to the extent possible, namely, floodplains and wetlands assessments in accordance with EO 11988 and EO 11990, respectively and 10 CFR Part 1022, DOE floodplain and wetland environmental review requirements; Clean Air Act Conformity requirements; threatened and endangered species consultation required under the Endangered Species Act (ESA); and consultation under the National Historic Preservation Act (NHPA).

S.2 DOE'S PURPOSE OF AND NEED FOR AGENCY ACTION

The purpose of and need for the DOE's action is to decide whether to issue a Presidential permit for the Project. Although the DOE does not have siting or project alignment authority, projects proposed in applications for Presidential permits are evaluated as "connected actions" to the proposed Presidential permit that would authorize the border crossing.

The DOE will consider the effects analysis presented in this EIS in deciding whether to issue the permit to TDI-NE.

S.3 APPLICANT'S OBJECTIVES

In the Presidential permit application, TDI-NE noted that the proposed NECPL Project would be a merchant transmission facility that would deliver clean, renewable hydroelectric power from the Canadian province of Quebec into Vermont and ISO-New England through the 1,000-MW transmission line (TDI-NE 2014a). Specifically, TDI-NE stated that the NECPL Project would:

- further New England states' energy and environmental policy goals;
- diversify fuel supply in New England;
- reduce carbon emissions in New England;
- improve the economic competitiveness of the New England states; and
- provide economic benefits to Vermont and other New England states.[1]

S.4 PUBLIC PARTICIPATION AND INTERAGENCY COORDINATION

The public participation and interagency coordination elements of the NEPA process promote open communication between the lead federal agency and other regulatory agencies, Native American tribes, stakeholder organizations, and the public. On August 26, 2014, the DOE issued a Notice of Intent (NOI) to prepare an EIS for the Proposed Action and conduct public scoping (79 *Federal Register* 50901). The NOI explained that the DOE would prepare an EIS to assess the potential environmental effects of its Proposed Action to grant a Presidential permit to TDI-NE to construct, operate, maintain, and connect a new electric transmission line across the United States-Canada border in northern Vermont. The NOI also announced the DOE's public scoping process and invited the public to participate. The DOE's NOI was placed on the Project Web site[2] and on TDI-NE's Web site[3]. The DOE invited several federal and state agencies to participate as cooperating agencies in preparing this EIS because of their special expertise or jurisdiction by law (40 CFR 1501.6). The cooperating agencies for the Project are the U.S. Environmental Protection Agency (EPA) Region 1, the U.S. Coast Guard (USCG), and the U.S. Army Corps of Engineers (USACE), New England District. Each agency has a defined role relative to this EIS.

[1] See www.necplinkeis.com for additional information regarding TDI-NE's project objectives.
[2] http://www.necplinkeis.com
[3] http://necplink.com

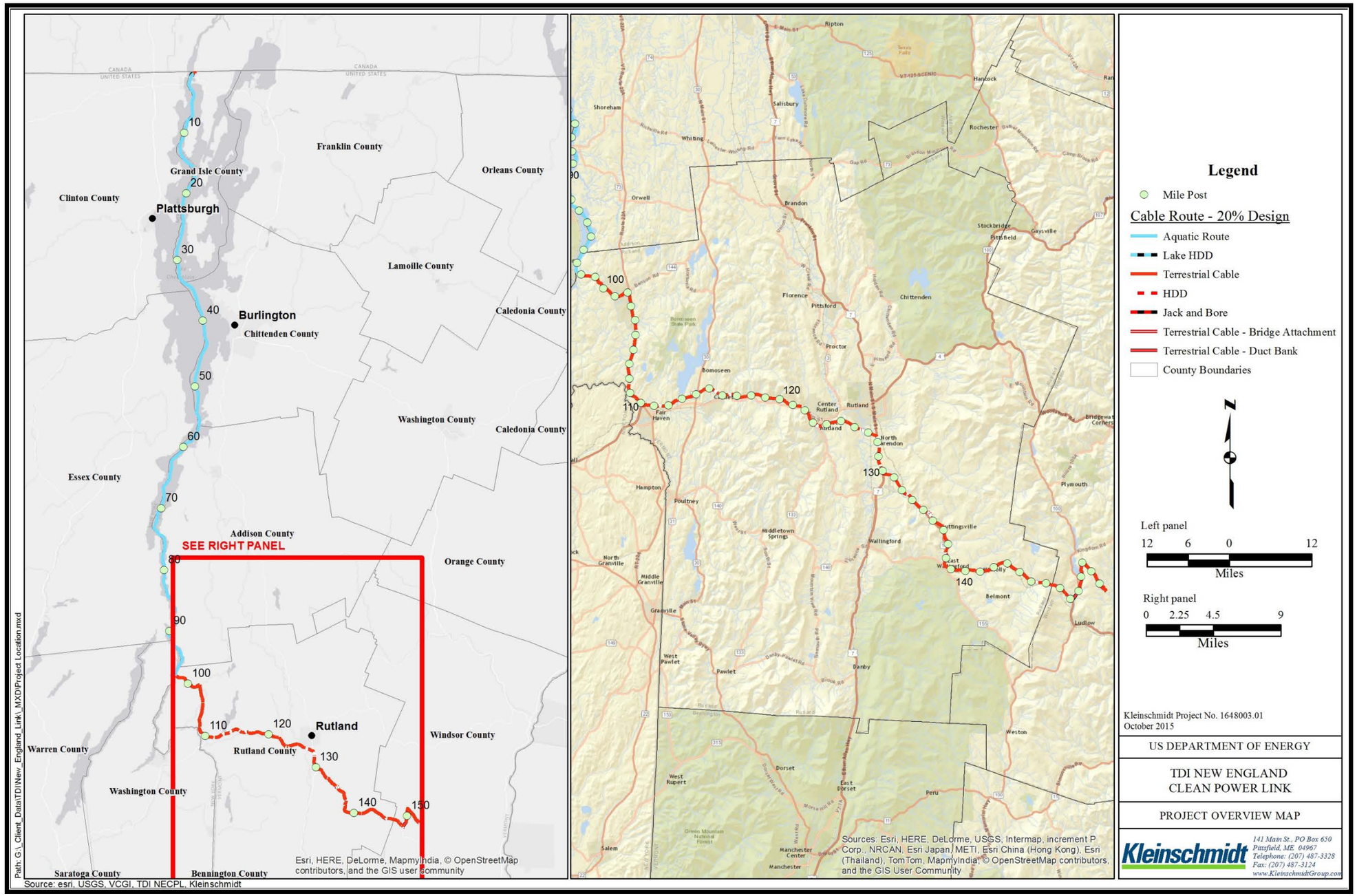

FIGURE S-1. NECPL PROJECT OVERVIEW

This Page Intentionally Left Blank

Public Scoping

The purpose of scoping is to provide interested agencies, stakeholder organizations, Native American tribes, and the public an opportunity to provide comments regarding potentially significant environmental issues and the scope of the EIS. The DOE provided a 45-day public scoping period starting August 26, 2014, and ending on October 10, 2014, to receive comments regarding the scope of the EIS. During the scoping period, the DOE held two public scoping meetings; one in Burlington, Vermont, and one in Rutland, Vermont. The DOE selected these locations because of their proximity to the proposed Lake Champlain Segment of the Project (Burlington) and to the Overland Segment (Rutland). TDI-NE held an open house beginning at 5 PM at each scoping meeting to provide Project information to interested parties. TDI-NE presented information about the proposed Project route; the technology to be used in constructing, operating and maintaining the HVDC transmission cable; and potential environmental issues.

All comments received during the scoping process were summarized in a Scoping Report issued on November 19, 2014, and made available on line at the Project Web site[4].

One individual gave verbal comments, which were transcribed by a court reporter. ***Appendix A, Scoping Summary Report,*** contains transcripts of the scoping meetings. The DOE received 12 written letters and emails from private citizens, government agencies, and non-governmental organizations providing comments on scoping. ***Appendix A*** and the Project Web site[5] contain the comments received during the scoping period, along with materials that were submitted for the record.

The following general issues and concerns were raised during the scoping period for the NECPL Project:

- potential for collocating the cables in the proposed location for the Champlain Hudson Power Express (CHPE) Project;
- potential effects of burying the transmission line in Lake Champlain, particularly resuspension of sediments and resultant effects, especially from phosphorus and mercury, on water quality, drinking water, and recreation (fishing, boating and swimming);
- potential for trenching techniques that would stir up solid sediments containing phosphorus, mercury, and other contaminants and cause them to dissolve and become active pollutants in Lake Champlain;
- potential effects of electric and magnetic fields (EMFs) on magnetic compass deviation;
- potential effects of heat produced by the cable on aquatic and geologic/soil resources;
- potential effects on navigation related to identifying and verifying sufficient burial depth and protection to prevent anchor fouling and damage of the transmission line; and
- potential spread of invasive species during construction and use of construction vessels.

The DOE considered the scoping comments in preparing this EIS.

Draft EIS Public Review Period

The DOE provided a 60-day review and comment period beginning June 12, 2015 with publication by the EPA of the Notice of Availability (NOA) of the Draft EIS in the *Federal Register*. ***Appendix B*** contains the EIS mailing list. The DOE also provided copies of the Draft EIS to federal, state, and local agencies with jurisdiction by law and to any stakeholder or member of the public that requested a copy. Comments on the Draft EIS were solicited via the Project Web site at necplinkeis.com or sent directly to the DOE.

[4] http://www.necplinkeis.com
[5] http://www.necplinkeis.com

During the review and comment period for the Draft EIS, the DOE held public hearings in Rutland and Burlington Vermont. The public hearings were recorded by a court reporter; however, since no one submitted any written or oral comments at the two public meetings, the transcripts are not appended to this Final EIS. Each of the three cooperating agencies provided comments on the Draft EIS. Other commenters included an individual, Department of the Interior, Vermont State Historic Preservation Officer (VTSHPO), and a tribe. The DOE considered all comments received during the Draft EIS comment period in preparing the Final EIS.

Appendix M to the Final EIS includes a summary of the comments received on the Draft EIS and responses to those comments. The comments generally fall into the following categories.

- Edits to reflect updated technical information: TDI-NE provided edits to the Draft EIS that updated the Project-specific technical details that mirror technical information provided by TDI-NE in other federal and state applications since publication of the Draft EIS. Edits were made to promote consistency between the EIS and other state and federal permits. Similar edits were requested by the USCG and USACE.
- Alternatives – The USACE requested that the DOE consider the alternatives described in the USACE 404 permit. The DOE provided in ***Appendix E*** a link to the most recently filed 404 permit application.
- Aquatic Resources – EPA recommended various additions to the water resource analyses; USCG recommended that the DOE include the Navigation Risk Assessment; USACE recommended addressing effects on invasive species during and after construction.
- Terrestrial Resources – Commenters requested details on the Project construction period; the effects on long-eared bat; permanent direct impacts to wetlands and temporary impacts. The DOE addressed these comments in Sections 5.1.6, 5.1.7, 5.2.6, and 5.2.7.
- Cultural Resources – The Vermont State Historic Preservation Office commented on the Region of Influence (ROI) for cultural resources in the Overland Segment, the blasting plan, and direct adverse effects of potential *National Register* eligible sites. The DOE addressed these comments in Sections 5.1.10 and 5.2.10.
- Public Comments – Only one public comment was received. This commenter objects to the Project on behalf of the stolen and destroyed terrain by dams, impoundments and corporations to sell power to the New England grid.

A NOA for the Final EIS will be published in the *Federal Register*. The Final EIS will be distributed to all individuals and parties that submitted substantive comments on the Draft EIS and to other interested parties who request a copy of the Final EIS. A Record of Decision (ROD) will be issued no sooner than 30 days following publication of the NOA for the Final EIS.

S.5 ALTERNATIVES ANALYZED

This Final EIS addresses the No Action Alternative and the DOE's Proposed Action. The Applicant, referred in this document as TDI-NE's, proposed NECPL Project is described in ***Section S.6***.

S.5.1. No Action Alternative

According to CEQ and the DOE regulations, an EIS must consider the No Action Alternative. The No Action Alternative establishes the baseline against which the potential environmental effects of a proposed action can be evaluated. Under the No Action Alternative, the DOE would not issue a Presidential permit to TDI-NE for the Project; the transmission system would not be constructed, and potential effects from the Project would not occur.

S.5.2. DOE's Proposed Action

The DOE's Proposed Action (Preferred Alternative) is the issuance of a Presidential permit that would authorize the construction, operation, and maintenance of the Project, which would cross the United States-Canada border. This EIS has been prepared to comply with NEPA and to support the DOE's decision regarding issuing the Presidential permit for the proposed Project.

S.6 PROPOSED NECPL PROJECT OVERVIEW

TDI-NE proposes to develop the NECPL Project as a merchant transmission facility to connect renewable power from Canada to Northeast power markets. TDI-NE estimates that the total capital cost for the Project would be $1.2 billion and that it would be in-service by 2019 (TDI-NE 2014a, 2014b).

The Project includes construction, operation, and maintenance of an approximately 154-mile long, 1,000-MW, high-voltage electric power transmission system originating in the Canadian Province of Quebec and terminating at a proposed new HVDC converter station in Ludlow, Vermont. The NECPL transmission system includes aquatic (underwater) and terrestrial (underground) segments in the state of Vermont. The underwater portions of the transmission cable would be buried in Lake Champlain, except at depths greater than 150 feet, where the cables would be placed on the lakebed and self-burial is expected to occur unless cable crosses an existing utility or another cable. The terrestrial portions of the transmission cable would be buried underground within existing roadway right-of ways (ROWs) and, to a small extent, railroad ROWs and property controlled by TDI-NE. At two specific stream/river crossings in Ludlow, TDI-NE proposes to place the cables in conduits and attach the conduits to a bridge or culvert headwall. The HVDC transmission line consists of two cables, one positively charged and the other negatively charged. Two solid, dielectric (no fluids), cross-linked polyethylene (XLPE) cables, each approximately 154-miles long, would have a nominal operating voltage of approximately +/- 300 to 320 kilovolts (kV). The proposed new HVDC converter station in Ludlow, Vermont, would convert the electrical power from DC to AC and then connect to the existing 345-kV Coolidge Substation in Cavendish, Vermont, which is owned by the Vermont Electric Power Company (VELCO) (TDI-NE 2014a).

The transmission cable route is divided into two segments: Lake Champlain (underwater) and Overland (terrestrial). ***Table S-1*** summarizes the Project route, including the corridor type and approximate length for each section. ***Appendix C*** provides the transmission system route maps.

TABLE S-1. SUMMARY OF PROJECT ROUTE

Cable Section	Segment	Corridor Type	Approximate Length (miles)
United States/Canada Border to Alburgh, Vermont	Lake Champlain	Terrestrial	0.5
Lake Champlain at Alburgh, Vermont to Benson, Vermont	Lake Champlain	Aquatic	97.6
Benson east (along local roads) to Vermont Route 22A	Overland	Terrestrial	4.3
Vermont Route 22A south to U.S. Route 4 in Fair Haven	Overland	Terrestrial	8.2
U.S. Route 4 east to U.S. Route 7 in Rutland	Overland	Terrestrial	17.4
Route 7 south to Route 103, North Clarendon	Overland	Terrestrial	2.7
Vermont Route 103 south/southeast to Railroad ROW in Shrewsbury	Overland	Terrestrial	3.8
Green Mountain Railroad Corporation Railroad ROW south to Route 103 in Wallingford	Overland	Terrestrial	3.5
Route 103 ROW south/southeast to Route 100 in Ludlow	Overland	Terrestrial	10.6
Route 100 ROW north to Town Roads in Ludlow	Overland	Terrestrial	0.8
Ludlow town roads to proposed new HVDC Converter Station	Overland	Terrestrial	4.5
Proposed AC cable alignment from the new Converter Station in Ludlow to the existing VELCO Coolidge substation in Cavendish, Vermont along town roads	Overland	Terrestrial	0.6

Source: TDI-NE 2014b; updated in TRC 2015

The Vermont Public Service Board (VTPSB) must approve the siting of Vermont electric transmission facilities before site preparation or construction may begin. TDI-NE has completed all phases of the VTPSB approval process, including an evidentiary hearing on October 20, 2015, except for the filing of a post-hearing brief. The post-hearing brief must be filed by November 10, 2015. VTPSB will issue its decision after reviewing the brief. More information is available via www.necplink.com.

Aquatic Direct Current Transmission Cable

TDI-NE proposes to install transmission XLPE HVDC cables rated at +/- 300 to 320kV (depending upon the manufacturer) in the Lake Champlain Segment. The polyethylene insulation in the XLPE cable eliminates the need for fluid insulation, enables the cable to operate at higher temperatures with lower dielectric losses, improves transmission reliability, and reduces risk of network failure (TDI-NE 2014a). Underwater cable installation activities would be limited to certain times of the year to avoid life-cycle effects on aquatic species in the Project area. The majority of the transmission cables would be buried beneath the bed of Lake Champlain at depths of 3 to 5 feet to prevent unrelated aquatic operations in the waterways from disturbing the cables. In depths greater than 150 feet the cables are proposed to be laid on the bottom of the lake and self-burial is expected to occur unless cable crosses an existing utility or another cable. The actual burial depth would depend on factors such as the presence of existing infrastructure, the potential for anchor damage, the identification of archaeological or historic resources, local geological or topographical obstacles, or other environmental concerns. Burial depths would depend on available aquatic construction equipment, soil types and depth to bedrock, existing utilities, and the types of lake activities that occur in an area and their potential threat to cable integrity. Where the transmission cables cross an existing utility such as a pipeline or another cable, they would be laid over the existing utility, and articulated concrete mats would be installed over the cable crossing. Articulated concrete mats are typically small, pre-formed, concrete blocks that are

9 to 12 inches thick and are interconnected by cables or synthetic ropes in a two-dimensional grid ranging in size from 6 feet by 6 feet to 8 feet by 25 feet.

Horizontal Directional Drilling

TDI-NE would use horizontal directional drilling (HDD) to install the transmission cables in transition areas between aquatic and terrestrial portions of the Project route and to install cables under certain roadway or railway crossings in situations where trenching is not possible, or under environmentally sensitive areas such as lakes, rivers, wetlands, or archaeology sites. TDI-NE anticipates that the largest, most complex, HDD operation would occur at the two land-to-water transitions in Alburgh and Benson, Vermont.

At each proposed HDD location, two separate drill holes would be required, one for each of the cables. Each cable would be installed within a 10-inch-diameter, or larger, high-density polyethylene (HDPE), tube-shaped duct, or conduit. A minimum of 6 feet is required between each drill path to maintain appropriate separation between the cables. After the HDPE conduits are in place, the transmission cables are pulled through these pipes, which remain in place to protect the transmission cable.

For drilling operations extending from land into water, the directional drill would exit the ground in water at a depth sufficient to avoid affecting the littoral zone. To minimize turbidity in Lake Champlain associated with the HDD operation, TDI-NE may use a receiver casing. A large-diameter pipe segment would be pushed into the lake bottom at the planned HDD exit point. The slope of the exit shaft would be set at a grade suitable for the HDD exit slope. The HDD drill head would be steered into the bottom of the receiver casings and would continue up the shaft to the cable-laying barge. The shaft would be left in-place until the borehole is ready to receive the bore casing or cable. At that time, sediment and turbid water would be pumped out of the shaft into holding tanks on the barge, and the shaft would be removed and treated water released back into the lake.

As a potential alternative to receiver casings at the exit point of land-to-water HDD operations, a temporary rectangular cofferdam would be constructed at the offshore exit-hole location to reduce turbidity associated with the dredging and HDD operations and to help maintain the exit pit. The cofferdam would be approximately 16 feet by 30 feet with a dredged entry/exit pit typically 6 to 8 feet deep and would be constructed using steel sheet piles driven by a barge-mounted crane. The area inside the cofferdam would be excavated to create an exit pit at the water ward end of the borehole.

TDI-NE expects to employ at least three different sized HDD rigs on the Project, requiring staging areas of varying sizes depending on the length of the drill at the particular location, proximity to sensitive areas such as wetlands, access limits, and other constraints.

Terrestrial Direct Current Transmission Cable

The buried transmission line would begin at the United States and Canada border, continue into Alburgh (0.5 miles) and then approximately 56 miles from Benson to the proposed new HVDC converter station in the town of Ludlow, Vermont. The outer sheathing insulation of the underground transmission cables would be composed of an ultraviolet-stabilized, extruded polyethylene layer. The underground transmission cables would have an outside diameter of 4.5 inches, and each 1-foot length of cable would weigh approximately 30 pounds.

The two cables within the system typically would be laid side by side approximately 12 to 18 inches apart in a trench approximately 4 to 5 feet deep to provide for at least 3 feet of cover over the cables. After the cables are laid in the open trench, the trenches would be backfilled with low-thermal-resistivity material, such as well-graded sand to fine gravel, stone dust, or crushed stone. A protective

cover of HDPE, concrete, or polymer blocks would be placed directly above the backfill material. A marker tape would then be placed 2 to 3 feet above the cables.

Installing underground transmission cables along existing ROWs (road and railroad) would be completed via trenching techniques along this portion of the route, and HDD installation would be used in certain areas. A typical staging area for construction equipment in a roadway ROW would be approximately 20 to 50 feet wide along one side of the roadway.

Trenchless technologies, such as HDD, horizontal boring, or pipe jacking, may be used where the transmission line would cross roadways, railroads, or significant environmental resources. Horizontal boring is similar to HDD but uses an auger-type drill head (i.e., a rotating screwshaped blade) to remove soil from the borehole. Pipe jacking involves pushing a casing pipe into the soil along the desired alignment and removing the soil from within the casing pipe (TDI-NE 2014a).

Ludlow HVDC Converter Station

The HVDC transmission cables would terminate at the proposed HVDC converter station in Ludlow, Vermont. The new Ludlow HVDC Converter Station would convert the electrical power from DC to AC. An underground HVAC line would run approximately 0.6 miles to connect to the nearby existing Coolidge Substation located in Ludlow and Cavendish, Vermont. The "compact type" new HVDC converter station would have a total site footprint (i.e., building and associated areas and equipment) of approximately 4.5 acres, although the cleared area could be approximately 10 acres due to required grading, laydown areas, construction trailers, and setbacks. The main building would be approximately 165 feet by 325 feet with a height of approximately 52 feet. The new HVDC converter station would be powered by electricity taken directly from the proposed NECPL Project. The facility would not require onsite personnel during normal operations.

TDI-NE controls the property for the proposed new HVDC converter station which is adjacent to previously disturbed farmland and an overhead transmission line corridor.

Coolidge Substation Interconnection

The new Ludlow HVDC Converter Station would deliver its energy by underground cable to the existing Coolidge 345-kV substation, which is located on an approximately 6-acre parcel owned by VELCO. The Coolidge Substation is the Project's point of interconnection with the ISO-New England transmission system.

Additional Engineering Details – Heat

The operation of the transmission cables would result in the generation of heat, which reduces the electrical conductivity of the cables; therefore, before laying the cables, the trenches would be backfilled with low-thermal-resistivity material, such as sand, to prevent heat from one cable from affecting a nearby cable. Should circumstances dictate that debris be removed from the lake and disposed of on land, disposal would be arranged in accordance with applicable federal, state and local codes, regulations and guidelines. A protective layer of weak concrete or a similar protective material would be installed directly above the backfill material. A marker tape would be placed 2 to 3 feet above the cables. The top of the soil covering the trench might be slightly crowned to compensate for settling.

Additional Engineering Details – Electric and Magnetic Fields

For electrical transmission lines, EMF levels decrease with increasing distance from the line. The EMF strength is inversely proportional to the square of the distance from the transmission line; however, when HVDC cables are close to each other, the opposing magnetic fields substantially cancel each other. Over time, magnetic fields produced by DC sources are constant, but those produced by AC sources vary in both magnitude and polarity. Since DC magnetic fields are static, they do not induce

currents in surrounding stationary objects or humans (NIEHS 2002; Vitatech 2012). The proposed NECPL cable would carry DC. Electrical fields are measured in units of kilovolts per meter (kV/m), and magnetic fields are measured in unit of gauss (G). This EIS discusses magnetic field strength in units of milligauss (mG), or one thousandth of a G. Common household devices produce EMFs when they are connected to a source of electricity. Modern lifestyles rely upon a suite of electronic devices contributing to the baseline or natural background exposure to EMFs.

Results of a numerical study that calculated the expected magnetic field within the Lake Champlain Segment suggest that the fields would diminish quickly with distance from the transmission cable (Exponent 2014a). At 10 feet from the cables, the expected magnetic field deviation would be only 10 percent of the ambient background geomagnetic level, and at 25 feet the deviation would be only 1 percent of the ambient level (Exponent 2014). The strongest magnetic field expected anywhere along the submarine portion of the route is predicted to occur 1 foot above the lakebed (Exponent 2014). The level produced would be approximately 0.1 percent of the general public exposure limit of 4,000,000 mG recommended by the International Commission for Non-Ionizing Radiation Protection (ICNRP). The risk to public health and safety from EMFs during the operation and maintenance of the proposed transmission cable is so small that it is practically zero.

S.6.1. Construction and Schedule

TDI-NE anticipates that the permitting phase of the proposed NECPL Project could continue through mid-2016, with major construction commencing in 2018. Installation of the cables is proposed to be completed between 2016 and 2018.

S.6.1.1. AQUATIC TRANSMISSION CABLE INSTALLATION

The general sequence for installing the aquatic DC transmission cables would be as follows:

- pre-installation clearing
- cable installation
- post-installation survey

To the extent practical, the aquatic transmission cables would be buried in Lake Champlain to a target depth of between 3 and 5 feet, or the maximum reasonably attainable depth. Factors that may influence attainable depth include the lakebed bedrock and substrate. The first step in the installation of the aquatic transmission cables would involve clearing the proposed route of debris (e.g., logs, out-of-service cables) by dragging various types of grapnels (i.e., a long sliding prong, a series of giffords[6], and a series of rennies[7]) along the route. The specific type of grapnels to be utilized would be determined prior to construction in consultation with the contractor (TRC 2015). The next step would be installing the transmission cables using either a jet plow or a shear plow. The two HVDC underwater cables associated with the Project would be bundled and laid together within the same trench. The cables would be initially placed in a vertical position (one on top of the other) in the trench, although sediment conditions could allow for slumping into a horizontal position (side-by-side) relative to each other (TRC 2015). Cable burial would generally be performed at the same time the cable is laid or at

[6] A gifford grapnel is composed of units of four hooks at right angles to each other. The hooks resemble a crane hook with a broad hookseat to form a cup to hold the hooked cable. It can be used on any type of bottom but was originally designed for rocky or coral environments**.** Often used in tandem with a rennie grapnel.

[7] The rennie chain Grapnel is built of flat links, each having a double fluke bolted to it; links are shackled together in sets of four in the form of a chain, successive links and flukes being at right angles to each other. The Rennie chain grapnel can be used on any type of seabed but was originally designed for rocky environments. It is normally used with a set of Gifford grapnels to provide weight and back-up for varying seabed conditions.

a later date, as deemed appropriate or necessary due to subsurface conditions. The cables would be laid by a specially outfitted lay-barge.

The plowing process would be conducted using either a dynamically positioned cable ship or a positioned cable barge towing a plow device that simultaneously lays and embeds the aquatic transmission cables in a trench. If a barge is used, it would propel itself along the route with its forward winches; other moorings would hold the alignment during the installation. A four-point mooring system would allow a support tug to move the anchors while the installation and burial proceeds. A dynamically positioned cable ship would use thrusters and a propulsion system to tow the plow without the use of anchors.

The skid-mounted plow would be towed by the barge or cable ship because it has no propulsion system. The transmission cables would be deployed from the vessel to a funnel device on the plow. The plow would be lowered to the lakebed, and the plow blade would cut into the lakebed while it is towed along the pre-cleared route for a simultaneous lay-and-bury operation. The plow would then bury both cables in the same trench.

The buried aquatic cable in the northern part of Lake Champlain would be installed using water-jetting techniques. The water-jetting process uses jets of pressurized water to fluidize the sediments. The jet plow is fitted with hydraulic pressure nozzles that create a downward and backward flow within the trench, allowing the transmission cable to settle into the trench under its own weight before the sediment settles back into the trench.

A shear plow would be used to install portions of the transmission line route where the sediment stiffness is low and the waterway is narrow, which is expected to be in the southern portion of Lake Champlain. For the shear plowing technique, the plow is tethered to a surface support vessel that tows the plow along the lakebed. The plow creates a trench approximately 2 feet wide and 3 to 5 feet deep where the cables will settle. In limited areas along the aquatic route, the necessary burial depths for the protection of the transmission cables might not be achievable due to geology (e.g., areas of bedrock) or existing submerged infrastructure (e.g., other electric cables, natural gas pipelines). In these instances, the transmission cables would be buried as deep as possible or simply laid on the lake bottom and covered with articulated concrete mats for protection.

Both water jetting and mechanical plowing (i.e., jet plow and shear plow) would displace lakebed sediment within a narrow trench, which would permit the transmission cables to sink under their own weight. The displaced sediment would settle, and the trench would refill naturally following the installation of the transmission cables. The bottom area directly disturbed by water jetting or mechanical plowing varies depending upon sediments and depth of installation but would encompass a range from 12 to 16 feet in width depending on the width of the installation device (TDI-NE 2014a).

Given the limitations on barge size and the amount of transmission cable that could be carried on board, TDI-NE estimates that the cable-laying vessel would be able to carry approximately 15 miles of cable. This would result in approximately 8 segments that would require 16 splices for the 2 HVDC cables for the approximately 98-mile-long aquatic portion of the Lake Champlain Segment.

S.6.1.2. TERRESTRIAL DIRECT CURRENT TRANSMISSION CABLE INSTALLATION

The general sequence for installing the underground terrestrial DC transmission cables along road ROWs would be as follows:

- survey work, initial clearing operations (where necessary), and stormwater and erosion control installation;
- trench excavation;
- cable installation and splicing;
- backfilling; and
- restoration and revegetation.

Most of the supplies and equipment required for installing terrestrial transmission cable within the typical trench would be up to 4 feet wide at the top and approximately 4 to 6 feet deep to allow for proper depth and the 1-foot separation required between the two transmission cables to allow for heat dissipation (TDI-NE 2014a).

The underground transmission cables would require several joints; a flat pad would be installed under each joint for splicing activities. The number of joints would be determined either by the maximum length of cable that could be transported or by the maximum length of cable that could be pulled. The jointing would be performed in a jointing pit; typical segment lengths would range from 0.1 to 0.5 miles. The Overland Segment of the transmission line within the road ROWs could require more than 200 splices as part of the installation process. Along the road ROWs in normal terrain, where soil conditions range from organic, loam, sand, gravel, or other unconsolidated material, the trench would be excavated using wheeled or tracked construction vehicles where possible.

Along road ROWs, the transmission cables would be installed in the cleared area; where that is not possible due to constraints the cables would be installed under the road. If forested areas exist within the ROW, minor clearing would occur. If shallow bedrock is encountered, the rock would be removed by the most suitable technique given the relative hardness, fracture susceptibility, and expected volume of material. TDI-NE's preferred approach is mechanical removal. If that is not possible, then TDI-NE would evaluate alternatives, including a more shallow cable installation with enhanced concrete or steel cover protection, an increase in the amount of cover (if the changed topography is not problematic), or blasting to achieve the standard depth. Blasting, if needed, would be conducted only to the extent necessary to remove rock to allow the cables to be buried.

Six construction methods are proposed for installing the transmission line across waterbodies and small streams, although TDI-NE will consider others (VHB 2015[8]):

- **Aerial Crossing**. At aerial crossings, the transmission cable would be suspended above the stream being crossed in two locations where the fascia of an existing bridge or the headwall of an existing culvert provides a suitable face for attachment and the structure owner allows this configuration.
- **At Culvert Crossing**. Where feasible, the Project proposes to complete "At Culvert" crossings by excavating a trench within the roadway or within the embankment adjacent to the roadway and installing the transmission cable a minimum of five feet beneath the existing culvert.
- **Over Culvert Crossing**. At over culvert crossings, the proposed cable would be installed in the roadway embankment above an existing culvert.
- **Duct Bank Crossing.** At one location, a duct bank is proposed to be installed beneath the road surface in conjunction with a Vermont Agency of Transportation (VTrans) roadway improvement project.

[8] http://www.necplink.com/regulatory-documents.php

- **HDD.** Using this method, cable conduits would be installed under the streambed, avoiding any disturbance of the streambed, and the cables would then be pulled through the conduits.
- **Open Trench Excavation.** The open cut method of construction involves deploying temporary in-stream flow diversion structures, digging an open trench excavation (OTE) across the stream channel, installing the transmission cable, backfilling with suitable materials, and restoring the stream bank and channel bottom. This category includes dam and pump crossing and open cut.

The specific stream crossing method would be selected with prior approval from state and federal agencies as required by permit conditions

Ephemeral and intermittent streams that are dry at the time of crossing would be crossed only by the open-cut method with prior approval from state and federal agencies as required by permit conditions.

In wetland areas, the transmission cables would be installed by trenching. The typical sequence of activities would include clearing vegetation, installing erosion controls, trenching, installing cable, backfilling, and restoring the ground surface. TDI-NE notes that they cannot commit at this time to having the trench plugs remain in place until they receive guidance from state agencies as to what materials they might require be used. The trench plugs cannot be left in place if they could present a heat dissipation issue during operations. Equipment mats or low-ground-pressure, tracked vehicles would be used to minimize compaction and rutting. To expedite revegetation of wetlands, the top 1 foot of wetland soil would be stripped from over the trench, retained, and subsequently spread back over and across the backfilled trench area to facilitate wetland regrowth by maintaining physical and chemical characteristics of the surface soil and preserving the native seed bank. Trench plugs or other methods would be used to prevent draining of wetlands or surface waters into the trench.

The permanent ROW required for maintenance and operation of the transmission line along the terrestrial portions of the Project route would be approximately 12 feet wide along roadway ROWs. The permanent ROW would provide protection of the transmission cables against third-party damage and facilitate any required maintenance or repair. The transmission cables within the trench generally would be separated by a distance of approximately 1 foot.

Measures to Minimize Environmental Impacts

TDI-NE developed industry-accepted Best Management Practices (BMPs) and other environmental mitigation measures that it would implement before and after construction and during construction to minimize environmental impacts. Those plans and BMPs are discussed in ***Section 5*** of the EIS.

Operations and Maintenance

The proposed NECPL Project has an expected life span of 40 years or more. The HVDC and short sections of HVAC transmission cables are designed to be relatively maintenance-free and operate within the specified working conditions. Selected portions or aspects of the transmission system would be inspected to ensure equipment integrity is maintained (TRC 2015).

ROW Maintenance

During Project operation, TDI-NE proposes to clear vegetation on an as-needed basis within the 12-foot wide Project corridor, over the transmission cables. Vegetation management would include mowing, selective cutting to prevent the establishment of large trees (i.e., greater than 20 feet tall) directly over the trenched transmission line, and vegetation clearing on an as-needed basis to conduct repairs.

Decommissioning
Decommissioning of the Project transmission system would consist of de-energizing and abandoning the transmission cables in place. If decommissioning plans change, applicable regulations at the time of decommissioning would be met (DOE 2014).

S.7 ALTERNATIVES CONSIDERED BUT ELIMINATED FROM FURTHER DETAILED ANALYSIS

S.7.1. Collocating the Cables

Some stakeholders requested that TDI-NE consider collocating the CHPE and NECPL cables in a single trench. Collocating the cables would significantly increase the probability of a single, common mode failure[9] that could cause the outage of both cables. The loss of the two cables would result in the deficit of 2,000-MW of energy resources to eastern New York and New England. The reliability consequence of such a contingency was first studied with the proposal to construct a 2,000-MW HVDC from Raddison, Quebec, to Sandy Pond, New Hampshire, commonly called the New England Phase II HVDC transmission line. The Mid-Atlantic Area Council, East Central Area Reliability, and Northeast Power Coordinating Council (MEN) studied the issue extensively because the potential loss of 2,000-MW in eastern New York and New England would cause a major blackout in the three reliability regions. The results of the studies led to an inter-Area (PJM[10], NY, NE) operating procedure that limits the transfer on the Phase II HVDC line (ISO-New England). Thus, the two projects' cables are being proposed to be constructed in separate trenches with sufficient separation to preclude the single, common-mode outage of both sets of cables (TDI-NE 2014a).

S.7.2. Other Alternatives

TDI-NE evaluated several alternatives relative to the Project's purpose, need, and geographic requirements, as well as the practicability and environmental consequences of each alternative. A summary of the practical alternatives to the Project and a discussion of the potential environmental impacts of each alternative (TDI-NE 2014a) is presented in ***Appendix D***.

S.7.3. Conservation and Demand Reduction Measures

The energy demand forecasts for ISO-New England anticipate a 10-year growth rate of 1.3 percent a year for the summer peak demand, 0.6 percent a year for the winter peak demand, and 1.0 percent a year for the annual use of electric energy. Although demand is anticipated to grow relatively slowly, the *Regional System Plan* identifies the need for additional reliable capacity and fuel certainty. New England has become an "energy constrained system" due in part to heavy dependence on natural-gas-fired generation and the planned retirement of more than 4,000-MW of resources between June 2014 and June 2017 (ISO-NE 2014). The proposed NECPL Project would help address the needs and future goals identified in the *Regional System Plan*.

S.7.4. Transmission Technologies

Transmission technologies for HVDC can transport electricity from Canada to the New England area. The transmission technology that is selected greatly influences the system design, construction, and the resulting potential environmental effects (DOE 2014). The DOE analyzed the two types of transmission technologies in the CHPE FEIS (Chapter 2, Section 2.5.4, pp2-48 to 2-50); therefore,

[9] Common mode failure is when one event causes multiple systems to fail.
[10] PJM refers to Pennsylvania, New Jersey and Maryland

because the technology proposed for the Project is identical to that previously analyzed, the description of the technologies and advantages of each are incorporated herein by reference.

S.8 SUMMARY OF POTENTIAL EFFECTS ASSOCIATED WITH THE PROPOSED NECPL PROJECT

A summary of potential effects from the construction, operation, maintenance, and emergency repairs associated with the Proposed NECPL Project and the No Action Alternative are presented in ***Table S-2.*** The full impact analysis is presented in ***Section 5*** (Environmental Consequences) and ***Section 6*** (Cumulative Impacts) of the EIS.

While no specific alternative power generation sources have been identified under the No Action Alternative, it is assumed that future demand growth for electric power would be met by a mix of other power generation sources. The No Action Alternative is presented in ***Section 4*** of the EIS.

TABLE S-2. SUMMARY OF POTENTIAL EFFECTS OF THE PROPOSED NECPL PROJECT

	Proposed NECPL Project		
	Lake Champlain Segment	**Overland Segment**	**No Action Alternative**
State	Vermont	Vermont	Vermont
Counties	Grand Isle, Chittenden, Addison, Rutland	Rutland, Windsor	N/A
Milepost Range	0.0 to 97 (Canada to Alburgh to Lake Champlain to Benson)	98 to 154 (Benson Overland to Ludlow)	N/A
Corridor Type	Aquatic; limited terrestrial	Terrestrial	N/A
Construction Method	Trenching; HDD for Alburgh to Lake Champlain; diver lay, jet plow; shear plow; bottom lay HDD from Lake Champlain to Benson.	Trenching; HDD; blasting; jack and bore.	N/A
Construction Period	Cable installation: 7 months.	Cable installation: 18 months to 2 years.	N/A
Effects on Resource Areas from Project Construction, Operation and Maintenance (O&M), and Repairs			
Land Use	**Construction**: Minor, temporary displacement of vessel traffic. **O&M/Repair**s: Minimal effects on navigation and no effect to anchorage areas, which would be avoided; potential for minimal disruption of commercial and recreational use of lake.	**Construction**: Temporary disturbance of surrounding land uses along road ROWs; traffic patterns may be temporarily changed (e.g., detours, closures); temporary staging areas would be limited to ROWs to the extent possible and additional work space sited outside of ROW would have a temporary conversion from current use to construction use; all areas would be regraded and revegetated. **O&M/Repairs**: No effect on land uses.	No new land use effects would occur.

	Proposed NECPL Project		
	Lake Champlain Segment	**Overland Segment**	**No Action Alternative**
Transportation and Traffic	**Construction**: Potential short-term effect on ferry operations and commercial and recreational use of lake when ferry guidance cables are removed; timing with ferry cable maintenance outages would reduce any adverse impacts; no effect on any federal navigation channels or anchorage areas. **O&M/Repairs**: Potential for anchor snags is likely to be insignificant and location of transmission cable would be placed on navigation chart; barges may affect commercial and recreational use temporarily.	**Construction**: Local, temporary disturbances within the ROW; temporary increase in truck traffic along Project route roads especially during construction of the new Ludlow Converter Station (average 50 trucks per day). **O&M/Repairs**: No adverse effects anticipated because cable would be underground and within existing road and railroad ROWs; emergency repairs would be similar to construction but on a much smaller scale and duration.	No new effects on transportation and traffic would occur.
Water Quality	**Construction**: Temporary, minor increase in turbidity and resuspension of sediments from trenching and lakebed disturbance; increased turbidity may reduce light levels and oxygen levels; phosphorus concentration levels would temporarily increase at cable installation points; effects on water quality would be within limits of Vermont standards; no effect on groundwater. **O&M/Repairs**: Minimal heat transfer effects-0.9 degrees F immediately above the cable; for bedrock and self-burial installation configuration, temporary increase in water temperature of 1 degree F but would be in the normal water temperature fluctuations in Lake Champlain.	**Construction**: Minor, temporary increases in erosion and run off into surface waters during construction; minor temporary increase in turbidity in groundwater quality due to blasting and could increase bedrock fracturing. **O&M/Repairs**: No adverse effects.	No new effects on water quality would occur.

	Proposed NECPL Project		
	Lake Champlain Segment	**Overland Segment**	**No Action Alternative**
Aquatic Habitats and Species	**Construction**: Temporary minor increases in turbidity and sedimentation from dragging grapnel and jet and shear plowing; minor, temporary effects on submerged aquatic vegetation (SAV) in southern portion of the cable route; temporary increases in total suspended solids (TSS), reduction in prey, and releases of hydrocarbons may cause minor effects on fish, especially in shallower zones. Approximately 2.5 acres would be covered in concrete mats. **O&M/Repairs**: Insignificant effect of EMFs and increased temperature from cable.	**Construction**: Minimal effects due to resuspension of sediments and increased turbidity; the proposed Project would cross 11 named streams and 39 unnamed tributaries (perennial streams) and Lake Bomoseen. **O&M/Repairs**: Negligible effect of EMFs and increased temperature from cable.	No new effects on aquatic habitats and species would occur.
Aquatic Protected and Sensitive Species	**Construction**: No aquatic federal threatened and endangered species are present; local, temporary, minor effects on state-listed species from noise and increased sedimentation; sediment quality would be within Vermont standards; use of concrete mats represent approximately 4 percent of total cable coverage (2.5 acres) and would not affect habitat for state listed Lake sturgeon and overall construction would not create a barrier to Lake sturgeon migration into rivers for spawning. No anticipated effect from EMFs since only 4 percent of underwater cable would be atop the lakebed. **O&M/Repairs**: No aquatic federal threatened and endangered species are present; emergency	**Construction**: No aquatic federal threatened and endangered species are present in the Overland Segment; state listed Lake sturgeon in streams along the Overland Route could be temporarily affected through sediment disturbance and increased turbidity. No effect from EMFs. **O&M/Repairs**: Effects on state-listed species similar to those described for non-protected aquatic habitats and species.	No new effects on aquatic protected and sensitive species would occur.

	Proposed NECPL Project		
	Lake Champlain Segment	**Overland Segment**	**No Action Alternative**
	repairs would have effects similar to those of construction but would involve a smaller area over a shorter period.		
Terrestrial Habitats and Species	**Construction**: Minor temporary effect on vegetation in the Alburgh section of the cable route-removal of vegetation and trampling caused by construction equipment; no existing forest would be temporarily disturbed or permanently converted; noise associated with construction may cause temporary avoidance of forage, roosting, and nest areas near construction corridor, no EMF effects are anticipated. **O&M/Repairs**: No effects from operations anticipated because the cables would be buried. Temporary, minor effects associated with noises generated by maintenance activities (i.e., mowing in the ROW and human activity).	**Construction**: Temporary and permanent removal of some vegetation, including trampling during construction (e.g., soil excavation, soil compaction); some minor, temporary disturbance of forested areas, particularly in the fringe habitat near ROWs; conversion of 5.51 acres of forested habitat to herbaceous communities (0.74 acres permanently converted); blasting may result in temporary adverse effects on birds and wildlife that would avoid the foraging areas; one area of deer wintering area habitat (0.32 acres) would be affected. **O&M/Repairs**: Increases in soil temperature may cause minor alterations of terrestrial vegetation; mowing and maintenance may temporarily displace wildlife; occasional clearing of trees along the permanent project corridor would occur.	No new effects on terrestrial habitats and species would occur.
Terrestrial Protected and Sensitive Species	**Construction**: Noise from construction may have a temporary adverse effect on bald eagles and bats that may temporarily avoid foraging	**Construction**: No adverse effect on bald eagles, the Indiana bat, or northern long-eared bat; no adverse	No new effects on terrestrial protected and

	Proposed NECPL Project		
	Lake Champlain Segment	**Overland Segment**	**No Action Alternative**
	areas near construction; migratory waterfowl could be temporarily affected by construction noise-anticipated to occur for short duration at any one location. **O&M/Repairs**: Effects would be minimal and temporary as a result of watercraft performing the maintenance or emergency services which may displace birds, bats and waterfowl.	effect on state-listed rattlesnakes or eastern rat snake due to protective measures; no adverse effect on sandpipers; limited loss of woodlands and migratory bird habitat; no EMF effects on terrestrial species are anticipated. **O&M/Repairs**: No anticipated effects.	sensitive species would occur.
Wetlands	**Construction**: Two wetlands are associated with Alburgh portion of the route but both would be avoided so there would be no effect on terrestrial wetlands. **O&M/Repairs**: No effect.	**Construction**: No direct permanent impacts (i.e., permanent wetland fills) are proposed; temporary direct effects on 4.5 acres; 0.74 acres of permanent effects within the proposed Project corridor potentially resulting in habitat disturbance and alteration of local wetland hydrology and reduction of wetland function; there would be some limited clearing of palustrine forested (PFO) wetlands that overlap the Permanent Project Corridor. Clearing in PFO wetlands would result in conversion of these wetlands to palustrine emergent (PEM) or palustrine scrub-shrub (PSS) wetlands. **O&M/Repairs**: No significant effects on wetland species and function. No	No new effects on wetlands would occur.

	Proposed NECPL Project		
	Lake Champlain Segment	**Overland Segment**	**No Action Alternative**
		anticipated effects from increased temperatures.	
Geology and Soil	**Construction**: Temporary disturbance of 119 to 179 cubic yards of sediment in the cofferdam area if used; temporary, minor sediment disturbance if receiver casings is used; grapnel clearing may result in temporary disturbance to sediments; proposed Project would not affect bedrock layer as it would not be permeated to install the cable. **O&M/Repairs**: No maintenance is expected; effects of repairs would be similar to those of construction, except in a much smaller area.	**Construction**: Temporary, local effects on soil including erosion, sedimentation, and potential compaction and increased runoff; 4-5 acres (10 total acres due to grading) would be permanently cleared for the new Ludlow Converter Station; potential local effects on bedrock due to blasting, if needed. **O&M/Repairs**: May be a slight elevation in soil temperature immediately surrounding the cable but no adverse effects are anticipated.	No new effects on geology and soils would occur.
Cultural Resources	**Construction**: May adversely affect 3 known underwater archaeological sites, 2 of which are eligible for National Register of Historic Places (NRHP); the DOE is working with the VTSHPO to avoid, minimize, or mitigate any potential adverse effects. **O&M/Repairs**: No adverse effects anticipated.	**Construction**: May adversely affect 23 properties that are listed in the state register or NRHP; 4 known terrestrial sites; revised Overland Segment route specifically avoids historic village; potential to adversely affect properties not previously identified or listed. The DOE is working with VTSHPO to avoid, minimize, or mitigate any potential any effects. **O&M/Repairs**: No adverse effects.	No new effects on cultural resources would occur.
Infrastructure	**Construction**: No effect on local infrastructure anticipated; some excess soils would be disposed of at local solid waste management facility.	**Construction**: No anticipated effects on infrastructure.	No new effects on infrastructure would occur.

	Proposed NECPL Project		
	Lake Champlain Segment	**Overland Segment**	**No Action Alternative**
	O&M/Repairs: No effect on local infrastructure anticipated, including EMF effects on communications infrastructure.	**O&M/Repairs**: No anticipated effects on infrastructure, including EMF effects on communications infrastructure.	
Recreation	**Construction**: Short-term displacement of recreational users during construction; temporary closure of fishing platform in Alburgh; temporary delay or interruption of ferry operations; no adverse effects from EMFs; however, boaters may see a small deviation if using a compass; global positioning system (GPS) would not be affected. **O&M/Repairs**: Minimal effects if repairs are needed; repairs probably would be restricted to a small geographic area; no permanent aboveground facilities would be constructed; no adverse effects on recreationists or recreational activities are anticipated from EMFs.	**Construction**: Short-term, temporary disturbances of recreational facilities and access near the Project route, especially cyclists using the roads along the construction route. **O&M/Repairs**: No adverse effects anticipated from EMFs.	No new effects on recreation use and access would occur.
Public Health and Safety	**Construction**: Minor effects on contractors' health and safety; no effects on general public health and safety; no adverse effects from EMFs. **O&M/Repairs**: Potential health and safety risks to contractors during operations; emergencies, if any, would be brief (i.e., less than 30 days) and local.	**Construction**: Minor effects on contractors' health and safety; no effects on general public health and safety; no adverse effects from EMFs. **O&M/Repairs**: Potential health and safety risks to contractors during operations; emergencies, if any, would be brief (i.e., less than 30 days) and local.	No new effects on public health and safety would occur.
Noise	**Construction**: Local temporary increases in noise (i.e., 1 hour peak of up to 80 dBA at 35	**Construction**: Local temporary increases in noise during cable	No new effects on noise from construction,

	Proposed NECPL Project		
	Lake Champlain Segment	**Overland Segment**	**No Action Alternative**
	feet) during cable installation but is limited to those areas where the cable enters and exits Lake Champlain; boaters may notice the increase in noise across the water; waterfowl and other birds would likely relocate temporarily away from construction noise. **O&M/Repairs**: No adverse effects of operation; temporary noise increases during maintenance, localized to specific geographic area.	installation; noise increases in the ROW probably would not be noticeable due to existing traffic and activity; temporary adverse effect of blasting on local area which would be temporary and expected to be a rare occurrence. **O&M/Repairs**: No adverse effects of operation; temporary noise increases during maintenance, localized to specific geographic area.	operation and maintenance would occur.
Hazardous Materials	**Construction**: Hazardous materials used in construction equipment present the potential for spill contamination of water or land in staging areas and could have a temporary adverse impact on water quality and sediments. **O&M/Repairs**: Minimal amount of oils, solvents, and other hazardous materials from operations and potential emergency repairs.	**Construction**: Cables do not contain hazardous fluids - no effect on soils; storage and use of hazardous materials during construction presents the potential for spill contamination in staging areas and in the ROW. **O&M/Repairs**: Minimal amount of oils, solvents, and other hazardous materials from operations and potential emergency repairs.	No new effects from hazardous materials and wastes would.
Air Quality	**Construction**: Minor, local, temporary effects of use of diesel-powered engines, heavy equipment, barges, boats and generators; associated emissions of greenhouse gases (GHG) (9.9 tons per year).	**Construction**: Local, temporary effects of use of diesel powered engines, heavy equipment, and generators; associated emissions of GHG (4.5 tons per year) and fugitive dust. This represents a decrease over existing conditions.	No new effects from air quality would occur. GHG emissions would continue to occur at the present rate.

	Proposed NECPL Project		
	Lake Champlain Segment	**Overland Segment**	**No Action Alternative**
	O&M/Repairs: Effects of repairs would be less than those of construction; no violation of air quality standards.	**O&M/Repairs**: Effects of repairs would be less than those of construction; no violation of air quality standards. Operation of the Project is expected to decrease New England power plant emissions of carbon dioxide ("CO_2"), the primary constituent of GHGs by 32.9 million tons, equivalent to an 8.6% reduction, over a ten year study period; however, very little of that reduction would occur in Vermont, reflecting the limited in-state fossil-fueled generation.	
Socioeconomics	**Construction**: Minor, temporary increase in jobs in Vermont; no effect on population; no effects on children. **O&M/Repairs**: Employment in operation phase would be lower than in construction phase; tax payments to local towns and lease payments would provide funding to local economy; overall reduction in wholesale electric energy market prices.	**Construction**: Minor, temporary increase in jobs in Vermont; no effect on population or permanent housing or children. **O&M/Repairs**: Employment in operation phase would be lower than in construction phase; tax payments to local towns and lease payments would provide funding to local economy; overall reduction in wholesale electric energy market prices.	No new effects on socioeconomic resources would occur.

	Proposed NECPL Project		
	Lake Champlain Segment	**Overland Segment**	**No Action Alternative**
Environmental Justice	**Construction**: No disproportionate effect on minority or low-income populations. **O&M/Repairs**: No effect on minority or low-income populations.	**Construction**: No disproportionate effect on minority or low-income populations. **O&M/Repairs**: No effect on minority or low-income populations.	No new effects on environmental justice would occur.

1 PURPOSE OF AND NEED FOR THE ACTION

1.1 BACKGROUND

The proposed New England Clean Power Link (NECPL) Transmission Line Project (Project) consists of an approximate 154-mile long, 1,000-megawatt (MW), high-voltage direct current (HVDC) electric power transmission system that will have both aquatic (underwater) (≈ 98 miles) and terrestrial (underground) (≈ 56 miles) segments in the state of Vermont. The Project includes a transmission cable that would run from the United States and Canada border to Ludlow, Vermont, and associated equipment. The Project would terminate at the existing Vermont Electric Power Company (VELCO) substation in Cavendish, Vermont, and interconnect with the transmission system operated by Independent System Operator New England (ISO-New England). In addition to the transmission line itself, the system would include a new direct current (DC)-to-alternating current (AC) HVDC converter station in the town of Ludlow, Vermont.

On May 20, 2014, Champlain VT, LLC, d/b/a Transmission Developers, Inc.-New England (TDI-NE) applied to the U.S. Department of Energy (DOE) for a Presidential permit in accordance with Executive Order (EO) 10485, as amended by EO 12038, and the regulations at *10 Code of Federal Regulations* (CFR) 205.320 et seq. (2000), "Application for Presidential Permit Authorizing the Construction, Connection, Operation, and Maintenance of Facilities for Transmission of Electric Energy at International Boundaries." TDI-NE submitted a minor route revision on October 9, 2014.

As required by 10 CFR 205.320(a), any entity "who operates an electric power transmission or distribution facility crossing the border of the United States, for the transmission of electric energy between the United States and a foreign country, shall have a Presidential Permit, in compliance with EO 10485, as amended by EO 12038." EO 10485, as amended by EO 12038, authorizes the Secretary of Energy "[u]pon finding the issuance of the permit to be consistent with the public interest, and, after obtaining the favorable recommendations of the Secretary of State and the Secretary of Defense thereon, to issue to the applicant, as appropriate, a permit for [the] construction, operation, maintenance, or connection" of "facilities for the transmission of electric energy between the United States and a foreign country." The DOE determines whether issuing a Presidential permit would be consistent with the public interest and assesses the environmental effects of the proposed project, the effect of the proposed project on electric reliability, and other factors that the DOE considers relevant to the public interest.

The DOE Office of Electricity Delivery and Energy Reliability is responsible for reviewing Presidential permit applications and determining whether to grant a permit for electrical transmission facilities that cross the United States' international border. If the DOE issues the Presidential permit to TDI-NE (OE Docket Number PP-400), it would authorize TDI-NE to construct, operate, maintain, and connect the United States' portion of the Project at the international border near the village of Alburgh, Vermont. This Final EIS contains revisions and new information based in part on comments received on the Draft EIS. Vertical bars in the margins marking changed text indicate the locations of these revisions and new information. Deletions are not indicated.

The DOE determined that issuance of a Presidential permit would constitute a major federal action and that an Environmental Impact Statement (EIS) is the appropriate level of environmental review under the National Environmental Policy Act (NEPA) of 1969 (42 United States Code [U.S.C.] 4321 et seq.). The DOE prepared this EIS in compliance with NEPA requirements, the Council on Environmental Quality's (CEQ) regulations for implementing NEPA (40 CFR Parts 1500-1508), the DOE's implementing procedures for NEPA (10 CFR Part 1021), and other applicable regulations, including Compliance with Floodplain and Wetland Environmental Review Requirements (10 CFR Part 1022).

This EIS has the following key objectives:

- Identify baseline conditions along the proposed NECPL Project corridor.
- Identify and assess reasonably foreseeable potential effects on the natural and human environment that may result from implementing the Project in the United States.
- Describe and evaluate reasonable alternatives to the Project in the United States, including the No Action Alternative.
- Identify specific mitigation measures, as appropriate, to minimize environmental effects.
- Facilitate decision-making by the DOE and other applicable federal and Vermont regulatory agencies responsible for issuing associated permits and approvals.

Section 2 provides detailed information about the Project. Additional information for the proposed NECPL Project is located on the DOE's Web site located at http://necplinkeis.com/, and TDI-NE Web site is at http://necplink.com/.

1.2 DOE'S PURPOSE OF AND NEED FOR AGENCY ACTION

The purpose of and need for the DOE's action is to decide whether to issue a Presidential permit for the Project. Although the DOE does not have siting or project alignment authority, projects proposed in applications for Presidential permits are evaluated as "connected actions" to the proposed Presidential permit that would authorize the border crossing.

The DOE will consider the effects analysis presented in this EIS in deciding whether to issue the permit to TDI-NE.

1.3 DOE'S PROPOSED ACTION

The proposed federal action is the issuance of the Presidential permit for the construction, operation, and maintenance of the proposed Project facilities in the United States at the border with Canada. This EIS analyzes potential environmental effects of the Proposed Action (Preferred Alternative) and the No Action Alternative. The proposed Project would involve actions in floodplains and wetlands; therefore, in accordance with 10 CFR Part 1022, "Compliance with Floodplain and Wetland Environmental Review Requirements," and EO 11988, this EIS includes an analysis of effects on floodplains and wetlands. If granted, the Presidential permit would authorize TDI-NE to construct, operate, maintain, and connect the proposed project across the international border between the United States and Canada.

1.4 TDI-NE'S OBJECTIVES

In the Presidential permit application, TDI-NE noted that the proposed NECPL Project would be a merchant transmission facility that would deliver clean, renewable hydroelectric power from the Canadian province of Quebec into Vermont and ISO-New England through the 1,000-MW transmission line (TDI-NE 2014a). Specifically, TDI-NE stated that the NECPL Project would:

- further New England states' energy and environmental policy goals;
- diversify fuel supply in New England;
- reduce carbon emissions in New England;
- improve the economic competitiveness of the New England states; and
- provide economic benefits to Vermont and other New England states.[11]

[11] See www.necplinkeis.com for additional information regarding TDI-NE's project objectives.

1.5 PUBLIC PARTICIPATION AND INTERAGENCY COORDINATION

The public participation and interagency coordination elements of the NEPA process promote open communication between the lead federal agency and other regulatory agencies, Native American tribes, stakeholder organizations, and the public. On August 26, 2014, the DOE issued a Notice of Intent (NOI) to prepare an EIS for the Proposed Action and conduct public scoping (79 *Federal Register* 50901). The NOI explained that the DOE would prepare an EIS to assess the potential environmental effects of its Proposed Action to grant a Presidential permit to TDI-NE to construct, operate, maintain, and connect a new electric transmission line across the United States-Canada border in northern Vermont. The NOI also announced the DOE's public scoping process and invited the public to participate. The DOE's NOI was placed on the Project Web site[12] and on TDI-NE's Web site[13]. ***Table 1-1*** is a chronology of the Presidential permit application process for the Project and public notices to date.

TABLE 1-1 PROPOSED NECPL PROJECT PRESIDENTIAL PERMIT APPLICATION MILESTONES

Date	Action	Summary
May 20, 2014	TDI-NE filed Presidential permit application with the DOE	TDI-NE filed application for a 1,000-MW HVDC transmission line from the United States-Canada border through Lake Champlain to a new HVDC converter station in Ludlow, Vermont.
June 23, 2014	TDI-NE filed supplemental information to the Presidential Permit Application	TDI-NE noted that it would own and operate the transmission facilities and that functional control would be turned over to ISO-New England once the Project is in service.
July 6, 2014	The DOE issued Notice of the Application for Presidential permit; NECPL Project	The DOE announced its receipt of TDI-NE's application for Presidential permit and provided notice for comments on the application and any motions to intervene as a party to the proceeding.
August 26, 2014	The DOE issued NOI to prepare an EIS and initiate public scoping	The DOE announced its intent to prepare an EIS and conduct public scoping meetings.
September 16-17, 2014	Public scoping meetings held	The DOE hosted two scoping meetings: Burlington, Vermont, and Rutland, Vermont.
October 9, 2014	Alternative routing submitted	TDI-NE submitted a minor route adjustment at Cuttingsville, Vermont, to avoid a historic district.
October 10, 2014	Public scoping period ended	The DOE received 12 comment letters via electronic mail or hard copy and one comment during the public scoping meeting in Rutland, Vermont.
June 12, 2015	Notice of Availability of DEIS	EPA published Notice of Availability of the Draft EIS for a 60-day public comment
July 15-16, 2015	Public Meeting on DEIS	The DOE held two public meetings to take comments on the Draft EIS-July 15 in South Burlington, Vermont and July 16 in Rutland, Vermont
August 11, 2015	Draft EIS Public Comment Period Ends	The DOE received one comment from an individual and five comment letters from federal and state agencies

[12] http://www.necplinkeis.com
[13] http://necplink.com

1.5.1 PUBLIC SCOPING

The purpose of scoping is to provide interested agencies, stakeholder organizations, Native American tribes, and the public an opportunity to provide comments regarding potentially significant environmental issues and the scope of the Draft EIS. The DOE provided a 45-day public scoping period starting August 26, 2014, and ending on October 10, 2014, to receive comments regarding the scope of the Draft EIS. During the scoping period, the DOE held two public scoping meetings; one in Burlington, Vermont, and one in Rutland, Vermont (***Table 1-2***). The DOE selected these locations because of their proximity to the proposed Lake Champlain Segment of the Project (Burlington) and to the Overland Segment (Rutland). TDI-NE held an open house beginning at 5 PM at each scoping meeting to provide Project information to interested parties. TDI-NE presented information about the proposed Project route; the technology to be used in constructing, operating and maintaining the HVDC transmission cable; and potential environmental issues.

TABLE 1-2 PUBLIC SCOPING MEETING DATES AND LOCATIONS

Meeting Date /Time	Location	Number of Attendees
September 16, 2014, 6:00 PM	Sheraton, Burlington Vermont	8
September 17, 2014; 6:00 PM	Holiday Inn, Rutland Vermont	4

All comments received during the scoping process were summarized in a Scoping Report issued on November 19, 2014, and made available on line at the Project Web site[14].

One individual gave verbal comments, which were transcribed by a court reporter. ***Appendix A, Scoping Summary Report,*** contains transcripts of the scoping meetings. The DOE received 12 written letters and emails from private citizens, government agencies, and non-governmental organizations providing comments on scoping. ***Appendix A*** and the Project Web site[15] contain the comments received during the scoping period, along with materials that were submitted for the record.

The following general issues and concerns were raised during the scoping period for the NECPL Project:

- potential for collocating the cables in the proposed location for the Champlain-Hudson Power Express project;
- potential effects of burying the transmission line in Lake Champlain, particularly resuspension of sediments and resultant effects, especially from phosphorus and mercury, on water quality, drinking water, and recreation (fishing, boating and swimming);
- potential for trenching techniques that would stir up solid sediments containing phosphorus, mercury, and other contaminants and cause them to dissolve and become active pollutants in Lake Champlain;
- potential effects of electric and magnetic fields (EMFs) on magnetic compass deviation;
- potential effects of heat produced by the cable on aquatic and geologic/soil resources;
- potential effects on navigation related to identifying and verifying sufficient burial depth and protection to prevent anchor fouling and damage of the transmission line; and
- potential spread of invasive species during construction and use of construction vessels.

The DOE considered the scoping comments in preparing this EIS.

[14] http://www.necplinkeis.com
[15] http://www.necplinkeis.com

1.5.2 ISSUES OUTSIDE THE SCOPE OF THIS EIS – CANADA

A few scoping comments focused on the potential effects of the Project on Canadian resources. This issue was dismissed from further detailed analysis because the DOE does not believe that an analysis of environmental and socioeconomic issues in Canada is appropriate. Although implementation of the Project would require construction of a transmission line and other infrastructure in Canada, NEPA does not require an analysis of environmental effects within another sovereign nation that result from actions approved by that sovereign nation. For that reason this EIS does not address potential environmental effects in Canada.

This approach is consistent with EO 12114, Environmental Effects Abroad of Major Federal Actions (January 4, 1979), which requires federal agencies to prepare an analysis of potentially significant effects of a federal action in certain defined circumstances and exempts agencies from preparing analyses in others. Section 2-3[b] of the EO does not require federal agencies to evaluate effects outside the United States when the foreign nation is participating with the United States, or is otherwise involved in the action. The Government of Quebec, through the Ministère du Développement durable, de l'Environnement, de la Faune et des Parcs, would review the potential environmental effects of the project in Québec as part of its authorization process associated with the facilities to be constructed in the province. The Canadian Government would authorize the Project and consider the environmental effects in its analysis. In both cases, Hydro-Québec would provide an environmental impact study to the authorities with the filings for the Project approval.

1.5.3 INTERAGENCY COORDINATION

The DOE invited several federal and state agencies to participate as cooperating agencies in preparing this EIS because of their special expertise or jurisdiction by law (40 CFR 1501.6). The cooperating agencies for the Project are the U.S. Environmental Protection Agency (EPA) Region 1, the U.S. Coast Guard (USCG), and the U.S. Army Corps of Engineers (USACE), New England District. Each agency has a defined role relative to this EIS.

The EPA has a unique responsibility in the NEPA review process. Under Section 309 of the Clean Air Act (CAA), the EPA is required to review and comment publicly on the environmental effects of major federal actions, including actions that are the subject of EISs. In this case, even though the EPA does not have a permitting responsibility for the NECPL Project, it reviewed and commented on the Draft EIS and will review the Final EIS and work with the DOE to help the Project avoid, minimize, and mitigate adverse environmental effects.

The USACE will consider the EIS in deciding whether to issue permits required under Section 10 of the Rivers and Harbors Act of 1899 and Section 404 of the Clean Water Act (CWA). In accordance with 33 CFR part 325 Appendix B (8)(c), the USACE will coordinate with the DOE to ensure that the USACE can adopt the NECPL Project EIS to support its decision-making requirements regarding the Section 10 and Section 404 permit applications submitted by TDI-NE.

The USCG will serve as a subject matter expert to advise the DOE regarding effects on navigation under the authority of the Ports and Waterways Safety Act, 33 U.S.C. § 1231, and the Rivers and Harbors Act, 33 U.S.C. § 471. Specifically the USCG will make recommendations regarding navigational safety and security along the proposed NECPL Project route.

1.5.4 FEDERAL, STATE, AND LOCAL AUTHORIZATIONS AND APPROVALS

Table 1-3 lists federal and state agencies and municipalities that could have permitting, review, or other approval responsibilities related to certain aspects of the Project. Federal agencies may use all or part of

this EIS to fulfill their regulatory responsibilities for their actions related to the proposed Project. The roles of the agencies shown in ***Table 1-3*** are addressed in various sections of this EIS where they are relevant to particular environmental resources and conditions. Full text of the laws[16] and EOs[17] can be accessed at government web sites.

TABLE 1-3. POTENTIAL PERMITS AND APPROVALS ASSOCIATED WITH THE PROPOSED NECPL PROJECT

Agency/Municipality	Permit/Approval/Consultation
Federal/State/Local	
DOE	Review applications for Presidential permits for construction, operation, and maintenance of a cross-border facility for the transmission of electrical energy; determination of public interest includes potential environmental effects, effects on system reliability, and other factors.
Federal Energy Regulatory Commission	Section 205 of the Federal Power Act
USACE	Section 404 of the Clean Water Act
	Section 10 of the Rivers and Harbors Act
U.S. Fish and Wildlife Service	Endangered Species Act Section 7, Migratory Bird Treaty Act, Magnuson-Stevens Fishery Conservation and Management, essential fish habitat review, and Golden and Bald Eagle Act consultation, as necessary.
USCG	Ports and Waterways Safety Act, 33 U.S.C. § 1231, and Rivers and Harbors Act, 33 U.S.C. § 471
State of Vermont	
State of Vermont, Public Service Board	Review Vermont Section 248 and 231 Applications to determine whether to issue a Certificate of Public Good
Vermont Agency for Transportation	For work in the state highway rights-of-way (ROWs)
Vermont Agency for Transportation	For work in the railroad ROWs
Vermont Agency of Natural Resources	Flood Hazard Area and River Corridor Permit 401 Water Quality Certificate Lake Encroachment Permits (Lake Champlain and Lake Bomoseen) Stream Alteration Permit Wetland Permit Construction Stormwater Permit Operational Stormwater Permit
Vermont State Historic Preservation Officer	Section 106 National Historic Preservation Act consultation
Municipal	
Town of Benson	Section 1111 Highway ROW permit
Town of Ludlow	Section 1111 Highway ROW permit
Town of Alburgh	Section 1111 Highway ROW permit

[16] http://uscode.house.gov/lawrevisioncounsel.shtml
[17] http://www.archives.gov/federal-register/executive-orders/disposition.html

1.5.5 DRAFT EIS PUBLIC REVIEW

The DOE provided a 60-day review and comment period beginning June 12, 2015 with publication by the EPA of the Notice of Availability (NOA) of the Draft EIS in the *Federal Register*. ***Appendix B*** contains the EIS mailing list. The DOE also provided copies of the Draft EIS to federal, state, and local agencies with jurisdiction by law and to any stakeholder or member of the public that requested a copy. Comments on the Draft EIS were solicited via the Project Web site at necplinkeis.com or sent directly to the DOE.

During the review and comment period for the Draft EIS, the DOE held public hearings in Rutland and Burlington Vermont on July 15 and 16, 2015, respectively. The public hearings were recorded by a court reporter; however, since no individual or agency submitted any written or oral comments at the two public meetings, the transcripts are not appended to this Final EIS. One comment was submitted via the Project Web site[18]. Each of the three cooperating agencies also provided comments on the Draft EIS in addition to the FWS and VTSHPO. The DOE considered all comments received during the Draft EIS comment period in preparing the Final EIS.

Appendix M to the Final EIS includes a summary of the comments received on the Draft EIS and responses to those comments. The comments generally fall into the following categories.

- Edits to reflect updated technical information: TDI-NE provided edits to the Draft EIS that updated the Project-specific technical details that mirror technical information provided by TDI-NE in other federal and state applications since publication of the Draft EIS. Edits were made to promote consistency between the EIS and other state and federal permits. Similar edits were requested by the USCG and USACE.
- Alternatives – The USACE requested that the DOE consider the alternatives described in the USACE 404 permit. The DOE has provided in ***Appendix E*** a link to the most recently filed 404 permit application
- Aquatic Resources – EPA recommended various additions to the water resource analyses; USCG recommended that the DOE include the Navigation Risk Assessment; USACE recommended addressing effects on invasive species during and after construction
- Terrestrial Resources – Commenters requested details on the Project construction period; the effects on long-eared bat; permanent direct impacts to wetlands and temporary impacts.
- Cultural Resources – The Vermont State Historic Preservation Office commented on the ROI for cultural resources in the Overland Segment, the blasting plan, and direct adverse effects of potential National Register eligible sites.
- Public Comments – Only one public comment was received. This commenter objects to the Project on behalf of the stolen and destroyed terrain by dams, impoundments and corporations to sell power to the New England grid.

A NOA for the Final EIS will be published in the *Federal Register*. The Final EIS will be distributed to all individuals and parties that submitted substantive comments on the Draft EIS and to other interested parties who request a copy of the Final EIS. A Record of Decision (ROD) will be issued no sooner than 30 days following publication of the NOA for the Final EIS.

[18] http://www.necplinkeis.com

1.6 ORGANIZATION OF THIS FINAL EIS

This Final EIS for the proposed Project addresses the following environmental resource areas in detail:

- Land Use
- Transportation and Traffic (including navigation and marine security)
- Water Resources and Quality (including floodplains, lakes, rivers, streams)
- Aquatic Habitat and Species
- Aquatic Protected and Sensitive Species (including Essential Fish Habitat [EFH])
- Terrestrial Habitat and Species
- Terrestrial Protected and Sensitive Species
- Wetlands
- Geology and Soils
- Cultural Resources
- Infrastructure
- Recreation
- Public Health and Safety (including Intentionally Destructive Acts and Other Causes of Structural Failure)
- Hazardous Materials and Wastes
- Air Quality
- Noise
- Socioeconomics

The Final EIS is organized into 12 sections and appendices. ***Table 1-4*** lists the sections and appendices and summarizes their contents.

TABLE 1-4 SECTIONS AND APPENDICES IN THE NECPL PROJECT FINAL EIS

Sections	Contents
1	States the purpose of and need for the agency action and describes the DOE's Proposed Action
2	Describes the proposed NECPL Project and the alternatives considered
3	Provides a general description of the resources and baseline, or existing condition, of those resources that could be affected by the NECPL Project
4	Discusses the No Action Alternative (not issuing a Presidential permit)
5	Analyzes the effects of implementing the NECPL Project on environmental resources
6	Describes the anticipated cumulative effects
7	Summarizes the public process and the interagency coordination on this Final EIS
8	Lists the preparers of the Final EIS
9	Lists references used to prepare the Final EIS
10	Acronyms
11	Glossary
12	Index
Appendices	
A	Scoping Summary Report
B	EIS Distribution List
C	Detailed Maps of the NECPL Project Transmission System
D	Project Route Alternatives Considered but Eliminated from Further Analysis
E	CWA Section 404 and Section 10 Permit Application
F	Vermont 248 Application Cover Letter
G	Applicant Proposed General Mitigation Measures
H	ESA Section 7 Document
I	NHPA Section 106 Documentation
J	Environmental Justice Analysis Background
K	Air Quality Analysis Background
L	Contractor Disclosure Statement
M	Comment Response Document

2 PROPOSED ACTION AND ALTERNATIVES

2.1 PROPOSED ACTION

The DOE's Proposed Action (Preferred Alternative) is the issuance of a Presidential permit that would authorize the construction, operation, and maintenance of the Project, which would cross the United States/Canada border. This EIS has been prepared to comply with NEPA and to support the DOE's decision regarding issuing the Presidential permit for the proposed Project.

2.2 NO ACTION ALTERNATIVE

According to the CEQ's and the DOE's regulations, an EIS must consider the No Action Alternative. The No Action Alternative establishes the baseline against which the potential environmental effects of a proposed action can be evaluated. Under the No Action Alternative, the DOE would not issue a Presidential permit to TDI-NE for the Project; the transmission system would not be constructed, and potential effects from the Project would not occur. ***Section*** 4 provides the No Action Alternative analysis.

2.3 PROPOSED NECPL PROJECT OVERVIEW

TDI-NE proposes to develop the NECPL Project as a merchant transmission facility to connect renewable power from Canada to Northeast power markets. TDI-NE estimates that the total capital cost for the Project would be $1.2 billion and that it would be in-service by 2019 (TDI-NE 2014a, 2014b).

The Project includes construction, operation, and maintenance of an approximate 154-mile, 1,000-MW, high-voltage electric power transmission system originating in the Canadian Province of Quebec and terminating at a proposed new HVDC converter station in Ludlow, Vermont. The NECPL transmission system includes aquatic (underwater) and terrestrial (underground) segments in the state of Vermont (***Figure 2-1***). The underwater portions of the transmission cable would be buried in Lake Champlain, except at depths greater than 150 feet, where the cables would be placed on the lakebed. The terrestrial portions of the transmission cable would be buried underground within existing roadway ROWs and, to a small extent, railroad ROWs. The HVDC transmission line consists of two cables, one positively charged and the other negatively charged. Two solid, dielectric (no fluids), cross-linked polyethylene (XLPE) cables, each approximately 154-miles long, would have a nominal operating voltage of approximately +/- 300 to 320 kilovolts (kV). The proposed new HVDC converter station in Ludlow, Vermont, would convert the electrical power from DC to AC and then connect to the existing 345-kV Coolidge Substation in Cavendish, Vermont, which is owned by the VELCO (TDI-NE 2014a).

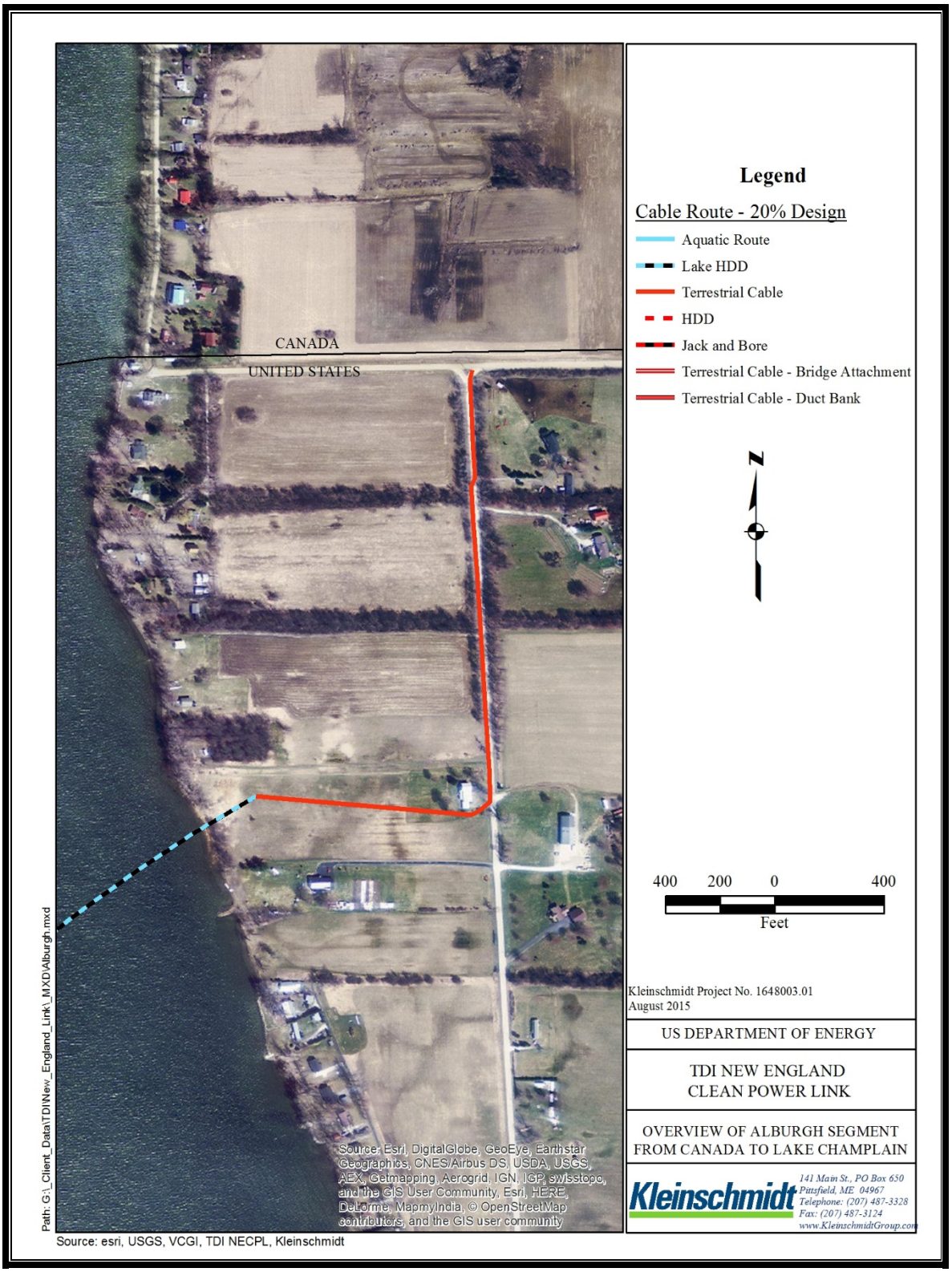

FIGURE 2-1. OVERVIEW OF ALBURGH SEGMENT FROM CANADA TO LAKE CHAMPLAIN

Section 1.5 describes the DOE's public scoping process for the Project. TDI-NE hosted public information sessions to inform interested stakeholders, adjacent property owners, and town residents and officials along the proposed Project route.

- August 19, 2014 Ludlow, Vermont
- August 21, 2014 Mount Holly, Vermont
- August 27, 2014 Castleton, Vermont
- August 28, 2014 Alburgh, Vermont
- September 2, 2014 Clarendon, Vermont
- September 4, 2014 Benson, Vermont

This Page Intentionally Left Blank

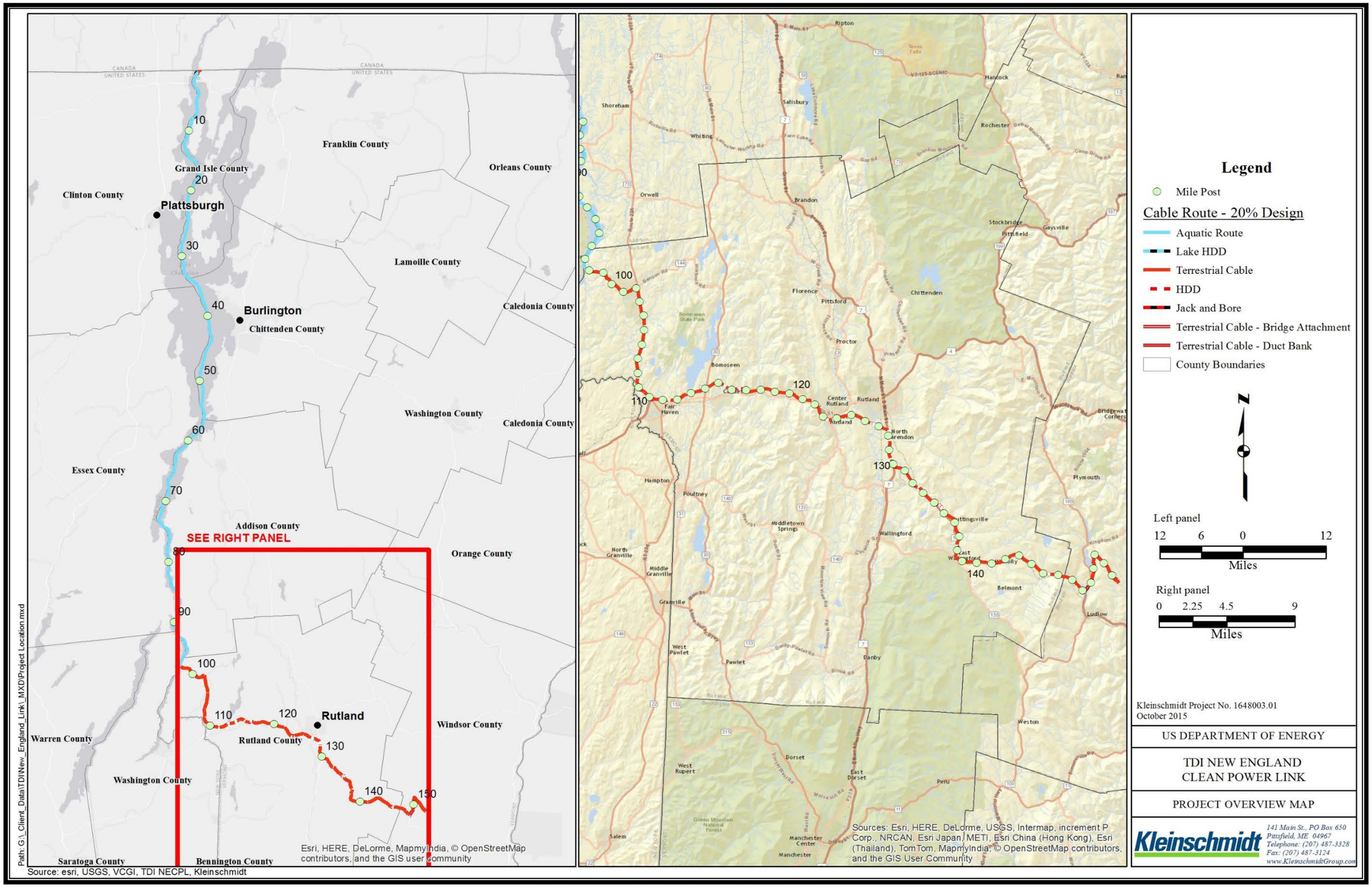

FIGURE 2-2 NECPL PROJECT OVERVIEW

This Page Intentionally Left Blank

2.3.1 ISSUANCE OF THE CERTIFICATE OF PUBLIC GOOD

On December 8, 2014, TDI-NE filed an application pursuant to 30 V.S.A. §248, seeking a certificate of public good from the Vermont Public Service Board (VTSB).

2.4 PROPOSED NECPL PROJECT LOCATION, DESIGN, AND CONSTRUCTION METHODS

The following sections describe the route segments analyzed in this EIS and specific engineering details of the transmission system: aquatic DC transmission cables; horizontal directional drilling (HDD) methods; terrestrial (Overland) DC transmission cables; new HVDC converter station in Ludlow, Vermont; and interconnection station in Cavendish, Vermont.

The DOE analyzed the technology and construction methods of a similar project proposed in New York in the Champlain Hudson Power Express Final Environmental Impact Statement (CHPE FEIS) (DOE 2014). The NECPL Project would use the same technology and construction methods, and Volume 2, pp 2-12 to 2-28, of the CHPE FEIS are incorporated here by reference. The following short summary of the technology and construction methods provides context for the Project effects analysis in ***Section 5***.

2.4.1 DESCRIPTION OF ROUTE SEGMENTS

The transmission cable route is divided into two segments: Lake Champlain (underwater) and Overland (terrestrial). ***Table 2-1*** summarizes the Project route, including the corridor type and approximate length for each section. **Appendix C** provides the transmission system route maps.

TABLE 2-1. SUMMARY OF PROJECT ROUTE

Cable Section	Segment	Corridor Type	Approximate Length (miles)
United States/Canada Border to Alburgh, Vermont	Lake Champlain	Terrestrial	0.5
Lake Champlain at Alburgh, Vermont to Benson, Vermont	Lake Champlain	Aquatic	97.6
Benson east (along local roads) to Vermont Route 22A	Overland	Terrestrial	4.3
Vermont Route 22A south to U.S. Route 4 in Fair Haven	Overland	Terrestrial	8.2
U.S. Route 4 east to U.S. Route 7 in Rutland	Overland	Terrestrial	17.4
Route 7 south to Route 103, North Clarendon	Overland	Terrestrial	2.7
Vermont Route 103 south/southeast to Railroad ROW in Shrewsbury	Overland	Terrestrial	3.8
Green Mountain Railroad Corporation Railroad ROW south to Route 103 in Wallingford	Overland	Terrestrial	3.5
Route 103 ROW south/southeast to Route 100 in Ludlow	Overland	Terrestrial	10.6
Route 100 ROW north to Town Roads in Ludlow	Overland	Terrestrial	0.8
Ludlow town roads to proposed new HVDC Converter Station	Overland	Terrestrial	4.5
Proposed AC cable alignment from the new Converter Station in Ludlow to the existing VELCO Coolidge substation in Cavendish, Vermont along town roads	Overland	Terrestrial	0.6

Source: TDI-NE 2014b; updated in TRC 2015

The VTPSB must approve the siting of Vermont electric transmission facilities before site preparation or construction may begin. TDI-NE has completed all phases of the VTPSB approval process, including an evidentiary hearing on October 20, 2015, except for the filing of a post-hearing brief. The post-hearing brief must be filed by November 10, 2015. VTPSB will issue its decision after reviewing the brief. More information is available via www.necplink.com.

2.4.2 AQUATIC DIRECT CURRENT TRANSMISSION CABLE

TDI-NE proposes to install transmission XLPE HVDC cables rated at +/- 300 to 320kV (depending upon the manufacturer) in the Lake Champlain Segment. The polyethylene insulation in the XLPE cable eliminates the need for fluid insulation, enables the cable to operate at higher temperatures with lower dielectric losses, improves transmission reliability, and reduces risk of network failure (TDI-NE 2014a) (***Figure 2-3***).

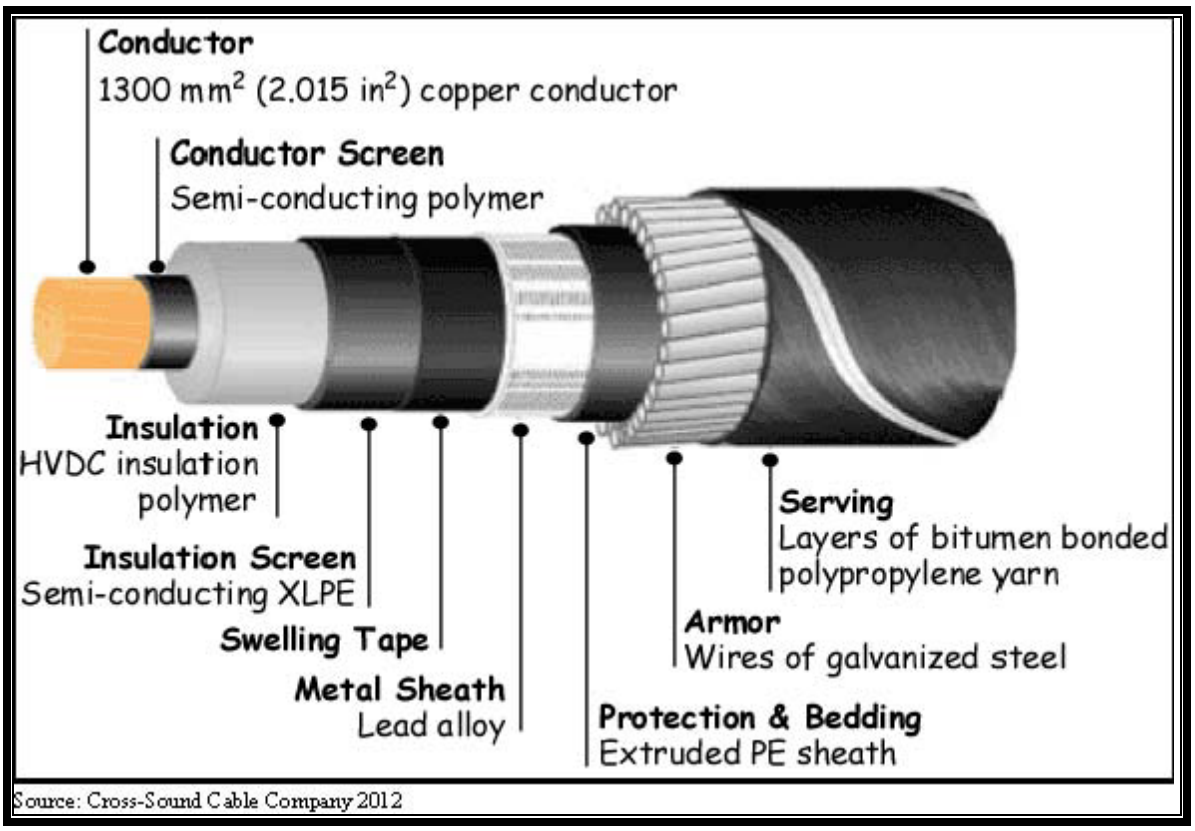

FIGURE 2-3 EXAMPLE AQUATIC HVDC TRANSMISSION CABLE CROSS-SECTION

Underwater cable installation activities would be limited to certain times of the year to avoid life-cycle effects on aquatic species in the Project area. The majority of the transmission cables would be buried beneath the bed of Lake Champlain at depths of 3 to 5 feet to prevent unrelated aquatic operations in the waterways from disturbing the cables. The actual burial depth would depend on factors such as the presence of existing infrastructure, the potential for anchor damage, the identification of archaeological or historic resources, local geological or topographical obstacles, or other environmental concerns. Burial depths would depend on available aquatic construction equipment, soil types and depth to bedrock, existing utilities, and the types of lake activities that occur in an area and their potential threat to cable integrity. Where the transmission cables cross an existing utility such as a pipeline or another cable, they would be laid over the existing utility, and articulated concrete mats would be installed over the cable crossing (***Figure 2-4***). Articulated concrete mats (***Figure 2-5***) are typically small, pre-formed, concrete blocks that are 9 to 12 inches thick and are interconnected by cables or synthetic ropes in a two-dimensional grid ranging in size from 6 feet by 6 feet to 8 feet by 25 feet.

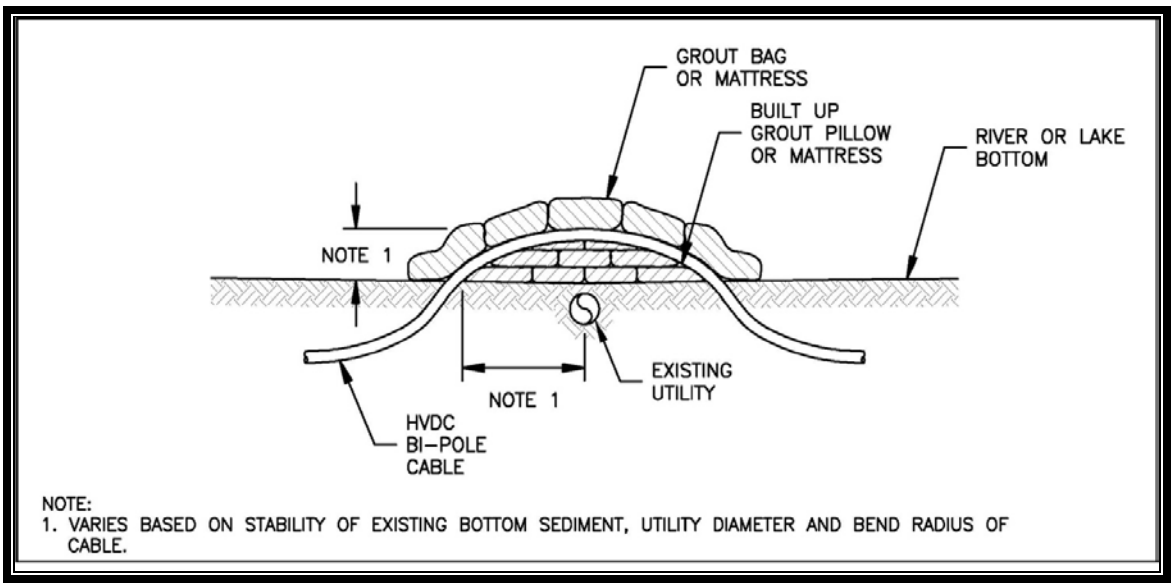

FIGURE 2-4 REPRESENTATIVE SCHEMATIC OF PROTECTION MEASURES FOR AQUATIC TRANSMISSION CABLES

Source: IMCA 2011

FIGURE 2-5 TYPICAL ARTICULATED CONCRETE MATS

2.4.3 HORIZONTAL DIRECTIONAL DRILLING

TDI-NE would use HDD to install the transmission cables in transition areas between aquatic and terrestrial portions of the Project route and possibly to install cables under roadway or railway crossings in limited situations where trenching is not possible, or under environmentally sensitive areas such as lakes and rivers. TDI-NE anticipates that the largest, most complex, HDD operation would occur at the two land-to-water transitions in Alburgh and Benson, Vermont.

At each proposed HDD location, two separate drill holes would be required, one for each of the cables (***Figure 2-6*** and ***Figure 2-7***). Each cable would be installed within a 10-inch-diameter, or larger, high-density polyethylene (HDPE), tube-shaped duct, or conduit. A minimum of 6 feet is required between each drill path to maintain appropriate separation between the cables. After the HDPE conduits are in place, the transmission cables are pulled through these pipes, which remain in place to protect the transmission cable.

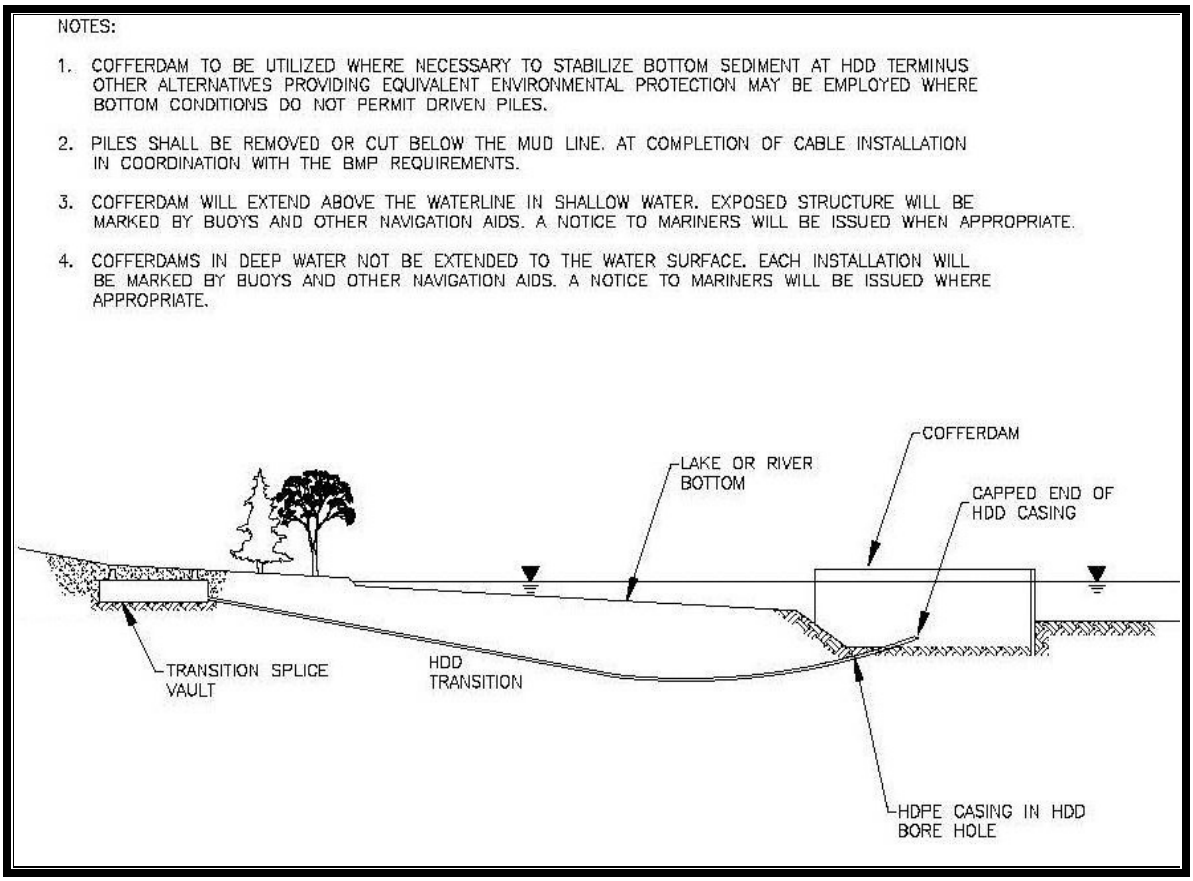

FIGURE 2-6 EXAMPLE HDD TECHNIQUES

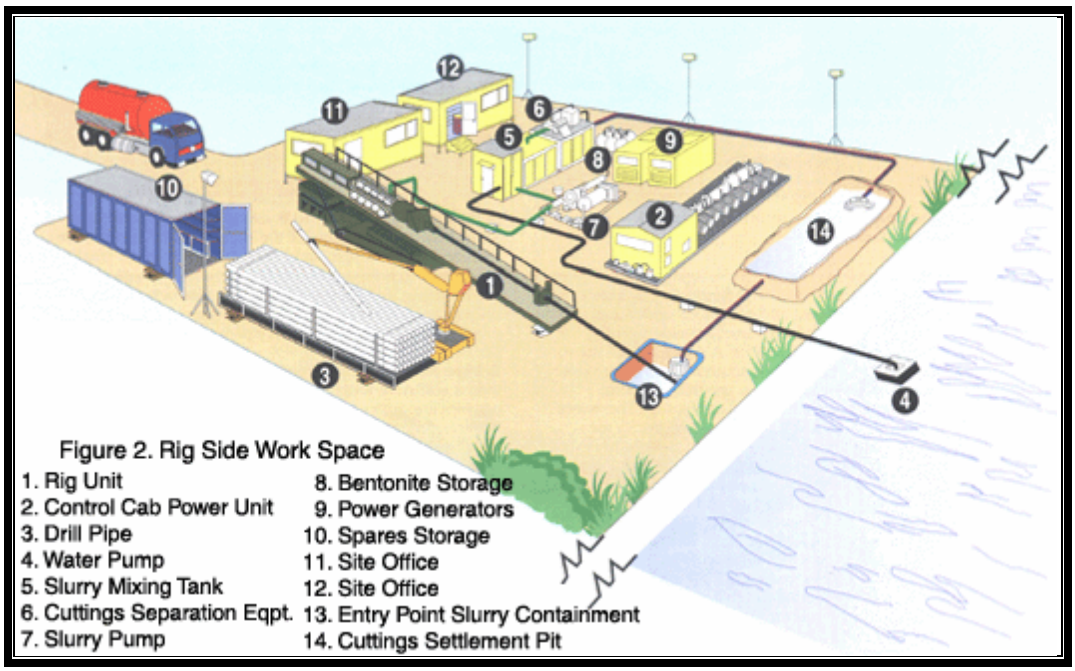

Source: Laney Drilling 2012 as cited in TDI-NE 2014a

FIGURE 2-7 TYPICAL HDD LANDFALL DRILL RIG OPERATION

For drilling operations extending from land into water, the directional drill would exit the ground in water at a depth sufficient to avoid affecting the littoral zone. To minimize turbidity in Lake Champlain associated with the HDD operation, TDI-NE may use a receiver casing. A large-diameter pipe segment would be pushed into the lake bottom at the planned HDD exit point. The slope of the exit shaft would be set at a grade suitable for the HDD exit slope. The HDD drill head would be steered into the bottom of the receiver casings and would continue up the shaft to the cable-laying barge. The shaft would be left in place until the borehole is ready to receive the bore casing or cable. At that time, sediment and turbid water would be pumped out of the shaft into holding tanks on the barge, and the shaft would be removed and treated water released back into the lake.

As a potential alternative to receiver casings at the exit point of land-to-water HDD operations, a temporary rectangular cofferdam would be constructed at the offshore exit-hole location to reduce turbidity associated with the dredging and HDD operations and to help maintain the exit pit. The cofferdam would be approximately 16 feet by 30 feet with a dredged entry/exit pit typically 6 to 8 feet deep and would be constructed using steel sheet piles driven by a barge-mounted crane. The area inside the cofferdam would be excavated to create an exit pit at the water ward end of the borehole.

TDI-NE expects to employ at least three different sized HDD rigs on the Project, requiring staging areas of varying sizes depending on the length of the drill at the particular location, proximity to sensitive areas such as wetlands, access limits, and other constraints.

2.4.4 TERRESTRIAL DIRECT CURRENT TRANSMISSION CABLE

The buried transmission line would begin at the United States and Canada border, continue into Alburgh (0.5 miles) and then approximately 56 miles from Benson to the proposed new HVDC converter station in the town of Ludlow, Vermont. The outer sheathing insulation of the underground transmission cables would be composed of an ultraviolet-stabilized, extruded polyethylene layer (***Figure 2-8***). The

underground transmission cables would have an outside diameter of 4.5 inches, and each 1-foot length of cable would weigh approximately 30 pounds.

The two cables within the system typically would be laid side by side approximately 12 to 15 inches apart in a trench approximately 4 to 5 feet deep to provide for at least 3 feet of cover over the cables. After the cables are laid in the open trench, the trenches would be backfilled with low-thermal-resistivity material, such as well-graded sand to fine gravel, stone dust, or crushed stone. Any fill would be disposed of at an approved site. A protective cover of HDPE, concrete, or polymer blocks would be placed directly above the backfill material. A marker tape would then be placed 2 to 3 feet above the cables (***Figure 2-9***).

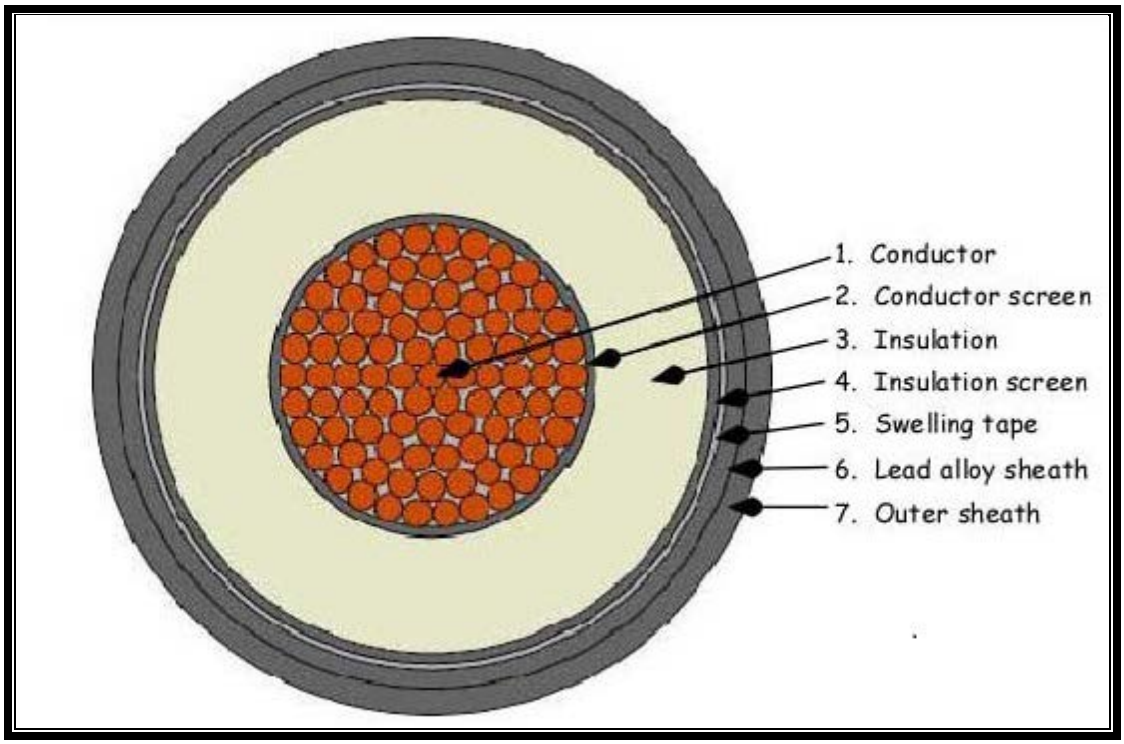

FIGURE 2-8 EXAMPLE TERRESTRIAL HVDC TRANSMISSION CABLE CROSS-SECTION

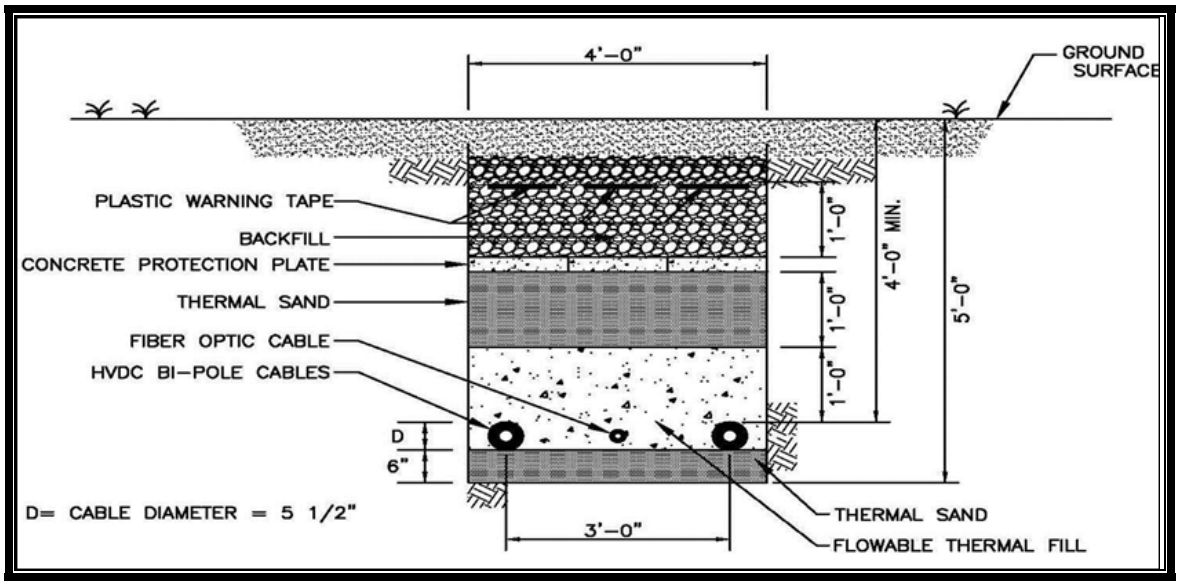

FIGURE 2-9 CROSS-SECTION OF UNDERGROUND SYSTEM

Installing underground transmission cables along existing ROWs would be completed via trenching techniques along this portion of the route, and HDD installation would be used in certain areas. A typical staging area for construction equipment in a roadway ROW would be approximately 20 to 50 feet wide along one side of the roadway (***Figure 2-10***).

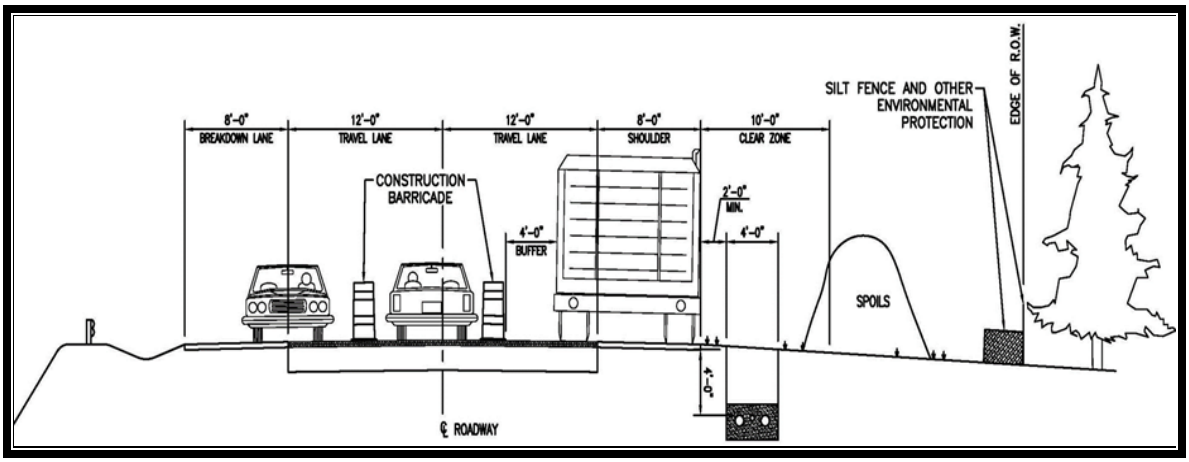

FIGURE 2-10 A TYPICAL STAGING AREA FOR CONSTRUCTION EQUIPMENT IN A ROADWAY ROW

Trenchless technologies, such as HDD, horizontal boring, or pipe jacking, may be used where the transmission line would cross roadways, railroads, or significant environmental resources. Horizontal boring is similar to HDD but uses an auger-type drill head (i.e., a rotating screw-shaped blade) to remove soil from the borehole. Pipe jacking involves pushing a casing pipe into the soil along the desired alignment and removing the soil from within the casing pipe (TDI-NE 2014a).

2.4.5 LUDLOW HVDC CONVERTER STATION

The HVDC transmission cables would terminate at the proposed new HVDC converter station in Ludlow, Vermont. The new Ludlow HVDC Converter Station would convert the electrical power from DC to AC. An underground HVDC line would run approximately 0.3 miles to connect to the nearby existing Coolidge Substation located in Ludlow and Cavendish, Vermont. The "compact type" new HVDC converter station would have a total site footprint (i.e., building and associated areas and equipment) of approximately 4.5 acres, although the cleared area could be approximately 10 acres due to required grading, laydown areas, construction trailers, and setbacks. Sheet 51 of ***Appendix C*** provides the proposed configuration of the new HVDC converter station. TDI-NE controls the property for the proposed new HVDC converter station on both sides of the roadway which is adjacent to previously disturbed farmland.

The main building would be approximately 165 feet by 325 feet with a height of approximately 52 feet. The new HVDC converter station would be designed to blend into the local environment and surroundings. It is anticipated that transformers and a spare parts building would be the major infrastructure installed outside of the building. The new HVDC converter station would be powered by electricity taken directly from the proposed NECPL Project. In the unlikely event this is not possible, electric power from a local utility (i.e., VELCO) would be used. A diesel generator may be used as emergency backup to provide black start capability (i.e., the ability to start operating and delivering electric power without assistance from the electric system in the event of an outage) and providing emergency power for the new HVDC converter station. The facility would not require onsite personnel during normal operations.

2.4.6 COOLIDGE SUBSTATION INTERCONNECTION

The new Ludlow HVDC Converter Station would deliver its energy by underground cable to the existing Coolidge 345-kV substation, which is located on an approximately 6-acre parcel owned by VELCO. The Coolidge Substation is the Project's point of interconnection with the ISO-New England transmission system.

2.4.7 CONSTRUCTION AND SCHEDULE

2.4.7.1 Aquatic Transmission Cable Installation

As referenced in ***Section 2.4.3***, HDD operation would occur at the two land-to-water transitions in Alburgh and Benson, Vermont. To the extent practical, the aquatic transmission cables would be buried in Lake Champlain to a target depth of between 3 and 5 feet, or the maximum reasonably attainable depth, whichever is deeper. Factors that may influence attainable depth include the lakebed bedrock and substrate. Aquatic transmission cables would cross under the Ticonderoga–Larrabee Point Ferry cable ferry crossing in Lake Champlain (approximately at Mile Post [MP] 88). The ferry uses two, parallel, steel guidance cables that are lifted by steel sheaves to pull the ferry along the cables. The guidance cables rest along the bottom of the lake when they are not in use and typically are replaced every 1-4 years. The guidance cables may need to be removed from the lakebed temporarily prior to the installation of the transmission cables. After installation and burial of the transmission cables, the guidance cables would be replaced over the transmission cables. Installation of the transmission cables would be coordinated with the ferry operator to minimize effects on ferry operations.

The general sequence for installing the aquatic DC transmission cables would be as follows:

- pre-installation clearing
- cable installation
- post-installation survey

The first step in the installation of the aquatic transmission cables would involve clearing the proposed route of debris (e.g., logs, out-of-service cables) by dragging various types of grapnels (i.e., a long sliding prong, a series of giffords, and a series of rennies) along the route. The specific type of grapnels to be utilized would be determined prior to construction in consultation with the contractor (TRC 2015). The next step would be installing the transmission cables using either a jet plow or a shear plow. The two HVDC underwater cables associated with the Project would be strapped together and laid within the same trench. The cables would be initially placed in a vertical position (one on top of the other) in the trench, although sediment conditions could allow for slumping into a horizontal position (side-by-side) relative to each other (TRC 2015). Cable burial would generally be performed at the same time the cable is laid or at a later date, as deemed appropriate or necessary due to subsurface conditions. The cables would be laid by a specially outfitted lay-barge.

The plowing process would be conducted using either a dynamically positioned cable ship or a positioned cable barge towing a plow device that simultaneously lays and embeds the aquatic transmission cables in a trench. If a barge is used, it would propel itself along the route with its forward winches; other moorings would hold the alignment during the installation. A four-point mooring system would allow a support tug to move the anchors while the installation and burial proceeds. A dynamically positioned cable ship would use thrusters and a propulsion system to tow the plow without the use of anchors.

The skid-mounted plow would be towed by the barge or cable ship because it has no propulsion system. For burial, the barge or ship would tow the plow at a safe distance as the laying and burial operation proceeds (***Figure 2-11***). The transmission cables would be deployed from the vessel to a funnel device on the plow. The plow would be lowered to the lakebed, and the plow blade would cut into the lakebed while it is towed along the pre-cleared route for a simultaneous lay-and-bury operation. The plow would then bury both cables in the same trench.

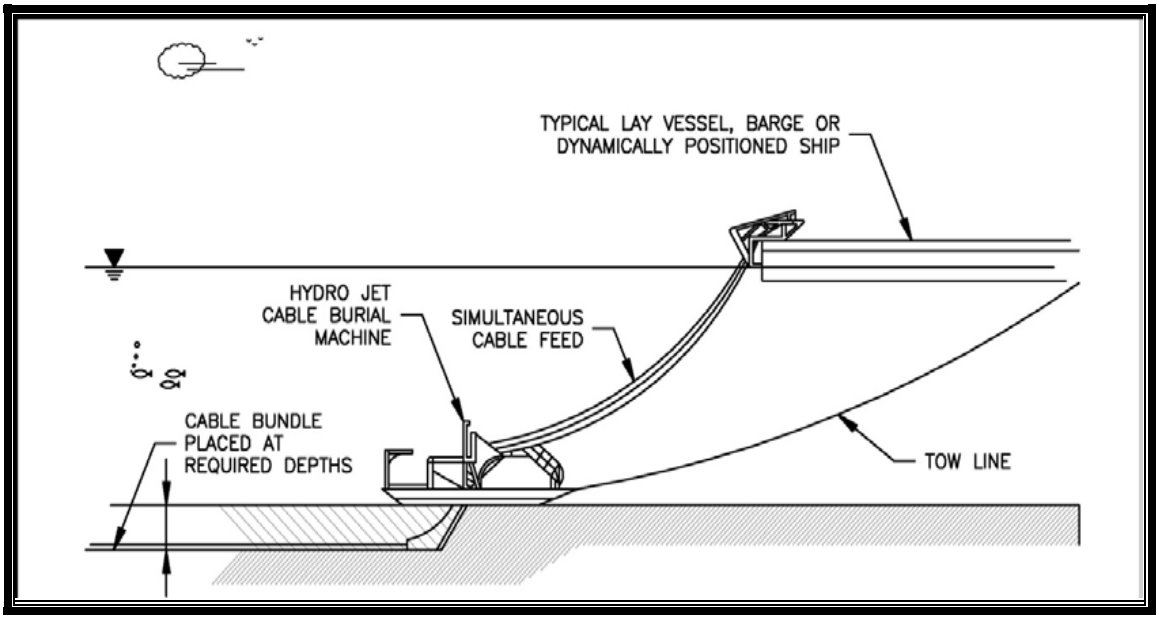

FIGURE 2-11 TYPICAL AQUATIC TRANSMISSION CABLE INSTALLATION PROCESS

The buried aquatic cable in the northern part of Lake Champlain would be installed using water-jetting techniques (***Figure 2-12*** and ***Figure 2-13***). The water-jetting process uses jets of pressurized water to fluidize the sediments. The jet plow is fitted with hydraulic pressure nozzles that create a downward and backward flow within the trench, allowing the transmission cable to settle into the trench under its own weight before the sediment settles back into the trench.

FIGURE 2-12 EXAMPLE OF WATER JET TRENCHING (JET PLOW) DEVICE

A shear plow would be used to install portions of the transmission line route where the sediment stiffness is low and the waterway is narrow, which is expected to be in the southern portion of Lake Champlain. For the shear plowing technique, the plow is tethered to a surface support vessel that tows the plow along the lakebed. The plow creates a trench approximately 2 feet wide and 3 to 5 feet deep where the cables would settle. In water deeper than 150 feet, the transmission cables would be laid on the surface of the lake bottom and are expected to self-bury.

Both water jetting and mechanical plowing (i.e., jet plow and shear plow) would displace lakebed sediment within a narrow trench, which would permit the transmission cables to sink under their own weight. The displaced sediment would settle, and the trench would refill naturally following the installation of the transmission cables. The bottom area directly disturbed by water jetting or mechanical plowing varies depending upon sediments and depth of installation but would encompass a range from 12 to 16 feet in width depending on the width of the installation device (TDI-NE 2014a).

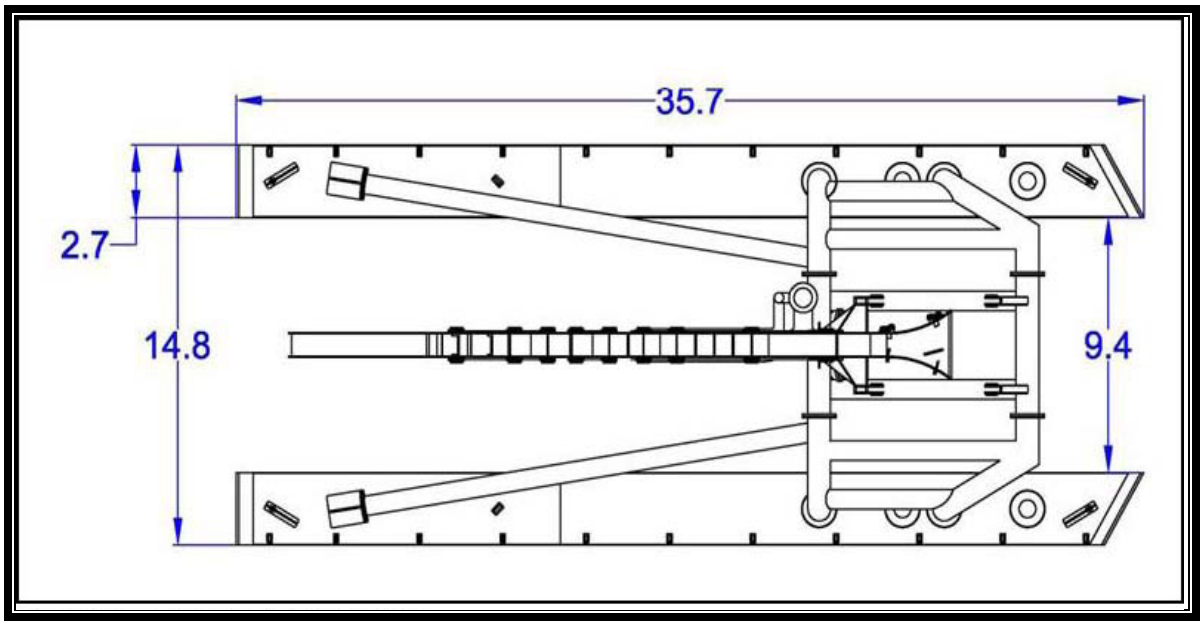

FIGURE 2-13 TYPICAL CABLE PLOW DIMENSIONS

TDI-NE would conduct an immediate post-installation survey to document the location and depth of buried cables. Where it is determined that the installation operation did not result in adequate backfill over the transmission cables, a backfill plow would be used. The backfill plow would employ horizontal blades that capture the sediment pushed to the sides during plowing and pull into the trench and over the cables. Usually, the trench completely refills over periods ranging from 6 months to 5 years depending on the soil type and water currents (ISE 2003). Most of the displaced sediment is expected to refill the trench immediately because bottom sediment naturally backfills the trench over the cable through wave action or bed-load transport of sediments. Should circumstances dictate that debris be removed from the lake and disposed of on land, disposal would be arranged in accordance with applicable federal, state and local codes, regulations and guidelines. TDI-NE proposes to conduct underwater depth-of-burial surveys every 5 years.

In limited areas along the aquatic route, the necessary burial depths for the protection of the transmission cables might not be achievable due to geology (e.g., areas of bedrock) or existing submerged infrastructure (e.g., other electric cables, natural gas pipelines). In these instances, the transmission cables would be buried as deep as possible or simply laid on the lake bottom and covered with articulated concrete mats for protection (***Figure 2-5*** and ***Figure 2-6***).

The ROW required for operation of the aquatic transmission cables depends on the water depth but is expected to be approximately 30 feet wide in most underwater areas. For the majority of the underwater portions of the NECPL Project route, the two cables would be strapped together and installed in the same trench. In Lake Champlain waters deeper than 150 feet, the transmission cables would be laid on the surface of the lake bottom. Cables that are laid on the lakebed are anticipated to settle an average of 1 foot below the surface over time.

For the installation of the transmission line in Lake Champlain, TDI-NE would either fabricate a cable-laying vessel or transport an existing vessel. An existing vessel would need to transit the New York State canal system, which would limit the size of the ship or barge that could be used to install the transmission cables. TDI-NE anticipates that the transmission cables would be transported to Port

Elizabeth, New Jersey, where they would be loaded onto the cable-laying vessel or onto a supply barge. Barges, ships or other vessels would be cleaned according to applicable regulations and best management practices (BMPs) to minimize the risk of spreading invasive species to Lake Champlain. A practical limit for cables is approximately 1,280 short tons (1,160 tonne) using special deck barges designed to transit the canal system. The height of the vessel with the cables must comply with the maximum 15-foot vertical clearance of bridges along the Champlain Canal.

Given the limitations on barge size and the amount of transmission cable that could be carried on board, TDI-NE estimates that the cable-laying vessel would be able to carry approximately 15 miles of cable. This would result in approximately 8 segments that would require 16 splices for the 2 HVDC cables for the approximately 98-mile long aquatic portion of the Lake Champlain Segment. The aquatic transmission cables manufactured in Europe would be shipped on ocean-going vessels to be installed by one or more United States-registered vessels. The aquatic cables would have to be loaded to a smaller cable-laying vessel (i.e., ship or barge) that is capable of operating in the Champlain Canal. TDI-NE confirmed that Port Elizabeth has adequate berthing and heavy-lifting facilities to complete this task (TDI-NE 2014a).

2.4.7.2 Terrestrial Direct Current Transmission Cable Installation

The general sequence for installing the underground terrestrial DC transmission cables along road ROWs would be as follows:

- survey work, initial clearing operations (where necessary), and stormwater and erosion control installation;
- trench excavation;
- cable installation and splicing;
- backfilling; and
- restoration and revegetation.

Most of the supplies and equipment required for installing terrestrial transmission cable within roadway ROWs would be transported to the underground portions of the proposed Project route via roadways whose ROW is being used. Construction workers would use local roadways to get to and from contractor yards or directly to the site.

The underground transmission cables would require several joints; a flat pad would be installed under each joint for splicing activities. The number of joints would be determined either by the maximum length of cable that could be transported or by the maximum length of cable that could be pulled. The jointing would be performed in a jointing pit; typical segment lengths would range from 0.1 to 0.5 miles. The Overland Segment of the transmission line within the road ROWs could require more than 200 splices as part of the installation process. Along the road ROWs in normal terrain, where soil conditions range from organic, loam, sand, gravel, or other unconsolidated material, the trench would be excavated using wheeled or tracked construction vehicles where possible. The typical trench would be up to 4 feet wide at the top and approximately 4 feet deep to allow for proper depth and the 1-foot separation required between the two transmission cables to allow for heat dissipation (TDI-NE 2014a).

Along road ROWs, the transmission cables would be installed in the cleared area of the road; where that is not possible due to constraints the cables would be installed under the road. If forested areas exist within the ROW, minor clearing would occur. If shallow bedrock is encountered, the rock would be removed by the most suitable technique given the relative hardness, fracture susceptibility, and expected volume of material. TDI-NE's preferred approach is mechanical removal. If that is not possible, then TDI-NE would evaluate alternatives, including a more shallow cable installation with enhanced concrete or steel cover protection, an increase in the amount of cover (if the changed

topography is not problematic), or blasting to achieve the standard depth. Blasting, if needed, would be conducted only to the extent necessary to remove rock to allow the cables to be buried. All blasting activities would follow the blasting plan that was submitted to the Vermont Public Service Board as Exhibit TDI-JMB-10 (TDI-NE 2014c). In areas where blasting is considered as an alternative installation method, licensed professionals would perform the work and would adhere to all industry standards applying to controlled blasting and blast vibration limits with regard to structures and underground utilities. At this point in the Project design, TDI-NE does not have site-specific information on areas that would require blasting. TDI-NE reviewed U.S. Department of Agriculture (USDA)/Vermont Soils Mapping for the entire Overland Segment, and this information suggests that blasting may be required in certain locations along the land portion of the Project; however, the accuracy of this data is such that the specific areas that require blasting would need to be confirmed during pre-construction activities. No blasting is expected for the Lake Champlain Segment.

The operation of the transmission cables would result in the generation of heat, which reduces the electrical conductivity of the cables; therefore, before laying the cables, the trenches would be backfilled with low-thermal-resistivity material, such as sand, to prevent heat from one cable from affecting a nearby cable. Should circumstances dictate that debris be removed from the lake and disposed of on land, disposal would be arranged in accordance with applicable federal, state and local codes, regulations and guidelines. A protective layer of weak concrete or a similar protective material would be installed directly above the backfill material. A marker tape would be placed 2 to 3 feet above the cables. The top of the soil covering the trench might be slightly crowned to compensate for settling.

Six construction methods are proposed for installing the transmission line across waterbodies and small streams, although TDI-NE will consider others (VHB 2015):

- **Aerial Crossing**. At aerial crossings, the transmission cable would be suspended above the stream being crossed in two locations where the fascia of an existing bridge or the headwall of an existing culvert provides a suitable face for attachment and the structure owner allows this configuration.
- **At Culvert Crossing**. Where feasible, the Project proposes to complete "At Culvert" crossings by excavating a trench within the roadway or within the embankment adjacent to the roadway and installing the transmission cable a minimum of five feet beneath the existing culvert.
- **Over Culvert Crossing**. At over culvert crossings, the proposed cable would be installed in the roadway embankment above an existing culvert.
- **Duct Bank Crossing.** At one location, a duct bank is proposed to be installed beneath the road surface in conjunction with a Vermont Agency of Transportation (VTrans) roadway improvement project.
- **HDD.** Using this method, cable conduits would be installed under the streambed, avoiding any disturbance of the streambed, and the cables would then be pulled through the conduits.
- **Open Trench Excavation.** The open cut method of construction involves deploying temporary in-stream flow diversion structures, digging an OTE across the stream channel, installing the transmission cable, backfilling with suitable materials, and restoring the stream bank and channel bottom. This category includes dam and pump crossing and open cut.

Ephemeral and intermittent streams that are dry at the time of crossing would be crossed only by the open-cut method with prior approval from state and federal agencies as required by permit conditions.

In wetland areas, the transmission cables would be installed by trenching. The typical sequence of activities would include clearing vegetation, installing erosion controls, trenching, installing cable, backfilling, and restoring the ground surface. Excess material from the overland trench would be disposed of in an upland, non-wetland location in accordance with applicable federal, state and local regulations. Equipment mats or low-ground-pressure, tracked vehicles would be used to minimize

compaction and rutting. To expedite revegetation of wetlands, the top 1 foot of wetland soil would be stripped from over the trench, retained, and subsequently spread back over and across the backfilled trench area to facilitate wetland regrowth by maintaining physical and chemical characteristics of the surface soil and preserving the native seed bank. Trench plugs or other methods would be used to prevent draining of wetlands or surface waters into the trench. If the trenching, stockpiling, cable installation, and backfilling are conducted from the road, soil compaction would be reduced, because heavy equipment operation on the ground surface along the cable trenches would be minimized.

A clean-up crew would complete the restoration and revegetation of the construction corridors and other temporary construction workspace. In conjunction with backfilling operations, any woody material and construction debris would be removed in accordance with applicable federal, state and local codes, regulations and guidelines from the construction corridor. The temporary construction area would be seeded with a fast-growing annual and wetland seed mixture to quickly stabilize the wetland area while the rhizomes, rootstock, and seeds in the wetland soils allow the native vegetation to re-establish over the course of the growing season.

The permanent ROW required for maintenance and operation of the transmission line along the terrestrial portions of the Project route would be approximately 12 feet wide along roadway ROWs. The permanent ROW would provide protection of the transmission cables against third-party damage and facilitate any required maintenance or repair. The transmission cables within the trench generally would be separated by a distance of approximately 1 foot.

2.4.8 DECOMMISSIONING

Decommissioning of the Project transmission system would consist of de-energizing and abandoning the transmission cables in place. The effects of decommissioning would be similar to the minimal risk of potential anchor snags on concrete mats described for operation of the transmission line (***Section 5.1.2***). If decommissioning plans change, applicable regulations at the time of decommissioning would be met (DOE 2014).

2.5 ALTERNATIVES CONSIDERED BUT ELIMINATED FROM FURTHER DETAILED ANALYSIS

2.5.1 COLLOCATING THE CABLES

Some stakeholders requested that TDI-NE consider collocating the CHPE and NECPL cables in a single trench. Collocating the cables would significantly increase the probability of a single, common mode failure[19] that could cause the outage of both cables. The loss of the two cables would result in the deficit of 2,000-MW of energy resources to eastern New York and New England. The reliability consequence of such a contingency was first studied with the proposal to construct a 2,000-MW HVDC from Raddison, Quebec, to Sandy Pond, New Hampshire, commonly called the New England Phase II HVDC transmission line. The Mid Atlantic Area Council, East Central Area Reliability, and Northeast Power Coordinating Council (MEN) studied the issue extensively because the potential loss of 2,000-MW in eastern New York and New England would cause a major blackout in the three reliability regions. The results of the studies led to an inter-Area (PJM[20], NY, NE) operating procedure that limits the transfer on the Phase II HVDC line (ISO-New England). Thus, the two projects' cables are being proposed to be constructed in separate trenches with sufficient separation to preclude the single, common-mode outage of both sets of cables (TDI-NE 2014a).

[19] Common mode failure is when one event causes multiple systems to fail.
[20] PJM refers to Pennsylvania, New Jersey and Maryland

2.5.2 OTHER ALTERNATIVES

TDI-NE evaluated several practicable alternatives relative to the Project's purpose, need, and geographic requirements, as well as the practicability and environmental consequences of each alternative. The USACE requires, as part of the Section 404 permitting process, an analysis of the practicable alternatives that provides rationale as to why the proposed site plan is the least environmentally damaging practicable alternative. A summary of the practical alternatives to the Project, the USACE's public notice and summary of alternatives, and a discussion of the potential environmental impacts of each alternative (TDI-NE 2014a) is presented by reference in ***Appendix E***.

2.5.3 TRANSMISSION TECHNOLOGIES

Transmission technologies for HVDC can transport electricity from Canada to the New England area. The transmission technology that is selected greatly influences the system design, construction, and the resulting potential environmental effects (DOE 2014). The DOE analyzed the two types of transmission technologies in the CHPE FEIS (Chapter 2, Section 2.5.4, pp2-48 to 2-50); therefore, because the technology proposed for the Project is identical to that previously analyzed, the description of the technologies and advantages of each are incorporated herein by reference.

2.6 SUMMARY OF POTENTIAL EFFECTS OF THE PROPOSED NECPL PROJECT

TABLE 2-2 SUMMARY OF POTENTIAL EFFECTS OF THE PROPOSED NECPL PROJECT

	Proposed NECPL Project		
	Lake Champlain Segment	**Overland Segment**	**No Action Alternative**
State	Vermont	Vermont	Vermont
Counties	Grand Isle, Chittenden, Addison, Rutland	Rutland, Windsor	N/A
Milepost Range	0.0 to 97 (Canada to Alburgh to Lake Champlain to Benson)	98 to 154 (Benson Overland to Ludlow)	N/A
Corridor Type	Aquatic; limited terrestrial	Terrestrial	N/A
Construction Method	Trenching; HDD for Alburgh to Lake Champlain; diver lay, jet plow; shear plow; bottom lay HDD from Lake Champlain to Benson	Trenching; HDD; blasting; jack and bore	N/A
Construction Period	Cable installation: 7 months	Cable installation: 18 months to 2 years	N/A
Effects on Resource Areas from Project Construction, Operation and Maintenance (O&M), and Repairs			
Land Use	**Construction**: Minor, temporary displacement of vessel traffic. **O&M/Repair**s: Minimal effects on navigation and no effect to anchorage areas, which would be avoided; potential for minimal disruption of commercial and recreational use of lake.	**Construction**: Temporary disturbance of surrounding land uses along road ROWs; traffic patterns may be temporarily changed (e.g., detours, closures); temporary staging areas would be limited to ROWs to the extent possible and additional work space sited outside of ROW would have a temporary conversion from current use to construction use; all areas would be regraded and revegetated. **O&M/Repairs**: No effect on land uses.	No new land use effects would occur.

	Proposed NECPL Project		
	Lake Champlain Segment	**Overland Segment**	**No Action Alternative**
Transportation and Traffic	**Construction**: Potential short-term effect on ferry operations and commercial and recreational use of lake when ferry guidance cables are removed; timing with ferry cable maintenance outages would reduce any adverse impacts; no effect on any federal navigation channels or anchorage areas. **O&M/Repairs**: Potential for anchor snags is likely to be insignificant and location of transmission cable would be placed on navigation chart; barges may affect commercial and recreational use temporarily.	**Construction**: Local, temporary disturbances within the ROW; temporary increase in truck traffic along Project route roads especially during construction of the new Ludlow Converter Station (average 50 trucks per day). **O&M/Repairs**: No adverse effects anticipated because cable would be underground and within existing road and railroad ROWs; emergency repairs would be similar to construction but on a much smaller scale and duration.	No new effects on transportation and traffic would occur.
Water Quality	**Construction**: Temporary, minor increase in turbidity and resuspension of sediments from trenching and lakebed disturbance; increased turbidity may reduce light levels and oxygen levels; phosphorus concentration levels would temporarily increase at cable installation points; effects on water quality would be within limits of Vermont standards; no effect on groundwater. **O&M/Repairs**: Minimal heat transfer effects-0.9 degrees F immediately above the cable; for bedrock and self-burial installation configuration, temporary increase in water temperature of 1 degree F but would be in the normal water temperature fluctuations in Lake Champlain.	**Construction**: Minor, temporary increases in erosion and run off into surface waters during construction; minor temporary increase in turbidity in groundwater quality due to blasting and could increase bedrock fracturing. **O&M/Repairs**: No adverse effects.	No new effects on water quality would occur.

	Proposed NECPL Project		
	Lake Champlain Segment	**Overland Segment**	**No Action Alternative**
Aquatic Habitats and Species	**Construction**: Temporary minor increases in turbidity and sedimentation from dragging grapnel and jet and shear plowing; minor, temporary effects on submerged aquatic vegetation (SAV) in southern portion of the cable route; temporary increases in total suspended solids (TSS), reduction in prey, and releases of hydrocarbons may cause minor effects on fish, especially in shallower zones. Approximately 2.5 acres would be covered in concrete mats. **O&M/Repairs**: Insignificant effect of EMFs and increased temperature from cable.	**Construction**: Minimal effects due to resuspension of sediments and increased turbidity; the proposed Project would cross 11 named streams and 39 unnamed tributaries (perennial streams) and Lake Bomoseen. **O&M/Repairs**: Negligible effect of EMFs and increased temperature from cable.	No new effects on aquatic habitats and species would occur.
Aquatic Protected and Sensitive Species	**Construction**: No aquatic federal threatened and endangered species are present; local, temporary, minor effects on state-listed species from noise and increased sedimentation; sediment quality would be within Vermont standards; use of concrete mats represent approximately 4 percent of total cable coverage (2.5 acres) and would not affect habitat for state listed Lake sturgeon and overall construction would not create a barrier to Lake sturgeon migration into rivers for spawning. No anticipated effect from EMFs since only 4 percent of underwater cable would be atop the lakebed. **O&M/Repairs**: No aquatic federal threatened and endangered species are present; emergency	**Construction**: No aquatic federal threatened and endangered species are present in the Overland Segment; state listed Lake sturgeon in streams along the Overland Route could be temporarily affected through sediment disturbance and increased turbidity. No effect from EMFs. **O&M/Repairs**: Effects on state-listed species similar to those described for non-protected aquatic habitats and species.	No new effects on aquatic protected and sensitive species would occur.

	Proposed NECPL Project		
	Lake Champlain Segment	**Overland Segment**	**No Action Alternative**
	repairs would have effects similar to those of construction but would involve a smaller area over a shorter period.		
Terrestrial Habitats and Species	**Construction**: Minor temporary effect on vegetation in the Alburgh section of the cable route-removal of vegetation and trampling caused by construction equipment; no existing forest would be temporarily disturbed or permanently converted; noise associated with construction may cause temporary avoidance of forage, roosting, and nest areas near construction corridor, no EMF effects are anticipated. **O&M/Repairs**: No effects from operations anticipated because the cables would be buried. Temporary, minor effects associated with noises generated by maintenance activities (i.e., mowing in the ROW and human activity).	**Construction**: Temporary and permanent removal of some vegetation, including trampling during construction (e.g., soil excavation, soil compaction); some minor, temporary disturbance of forested areas, particularly in the fringe habitat near ROWs; conversion of 5.51 acres of forested habitat to herbaceous communities (0.74 acres permanently converted); blasting may result in temporary adverse effects on birds and wildlife that would avoid the foraging areas; one area of deer wintering area habitat (0.32 acres) would be affected. **O&M/Repairs**: Increases in soil temperature may cause minor alterations of terrestrial vegetation; mowing and maintenance may temporarily displace wildlife; occasional clearing of trees along the permanent project corridor would occur.	No new effects on terrestrial habitats and species would occur.
Terrestrial Protected and Sensitive Species	**Construction**: Noise from construction may have a temporary adverse effect on bald eagles and bats that may temporarily avoid foraging	**Construction**: No adverse effect on bald eagles, the Indiana bat, or northern long-eared bat; no adverse	No new effects on terrestrial protected and

	Proposed NECPL Project		
	Lake Champlain Segment	**Overland Segment**	**No Action Alternative**
	areas near construction; migratory waterfowl could be temporarily affected by construction noise-anticipated to occur for short duration at any one location. **O&M/Repairs**: Effects would be minimal and temporary as a result of watercraft performing the maintenance or emergency services which may displace birds, bats and waterfowl.	effect on state-listed rattlesnakes or eastern rat snake due to protective measures; no adverse effect on sandpipers; limited loss of woodlands and migratory bird habitat; no EMF effects on terrestrial species are anticipated. **O&M/Repairs**: No anticipated effects.	sensitive species would occur.
Wetlands	**Construction**: Two wetlands are associated with Alburgh portion of the route but both would be avoided so there would be no effect on terrestrial wetlands. **O&M/Repairs**: No effect.	**Construction**: No direct permanent impacts (i.e., permanent wetland fills) are proposed; temporary direct effects on 4.5 acres; 0.74 acres of permanent effects within the proposed Project corridor potentially resulting in habitat disturbance and alteration of local wetland hydrology and reduction of wetland function; there would be some limited clearing of palustrine forested (PFO) wetlands that overlap the Permanent Project Corridor. Clearing in PFO wetlands would result in conversion of these wetlands to palustrine emergent (PEM) or palustrine scrub-shrub (PSS) wetlands. **O&M/Repairs**: No significant effects on wetland species and function. No	No new effects on wetlands would occur.

	Proposed NECPL Project		
	Lake Champlain Segment	**Overland Segment**	**No Action Alternative**
		anticipated effects from increased temperatures.	
Geology and Soil	**Construction**: Temporary disturbance of 119 to 179 cubic yards of sediment in the cofferdam area if used; temporary, minor sediment disturbance if receiver casings is used; grapnel clearing may result in temporary disturbance to sediments; proposed Project would not affect bedrock layer as it would not be permeated to install the cable. **O&M/Repairs**: No maintenance is expected; effects of repairs would be similar to those of construction, except in a much smaller area.	**Construction**: Temporary, local effects on soil including erosion, sedimentation, and potential compaction and increased runoff; 4-5 acres (10 total acres due to grading) would be permanently cleared for the new Ludlow Converter Station; potential local effects on bedrock due to blasting, if needed. **O&M/Repairs**: May be a slight elevation in soil temperature immediately surrounding the cable but no adverse effects are anticipated.	No new effects on geology and soils would occur.
Cultural Resources	**Construction**: May adversely affect 3 known underwater archaeological sites, 2 of which are eligible for National Register of Historic Places (NRHP); the DOE is working with the VTSHPO to avoid, minimize, or mitigate any potential adverse effects. **O&M/Repairs**: No adverse effects anticipated.	**Construction**: May adversely affect 23 properties that are listed in the state register or NRHP; 4 known terrestrial sites; revised Overland Segment route specifically avoids historic village; potential to adversely affect properties not previously identified or listed. The DOE is working with VTSHPO to avoid, minimize, or mitigate any potential any effects. **O&M/Repairs**: No adverse effects.	No new effects on cultural resources would occur.
Infrastructure	**Construction**: No effect on local infrastructure anticipated; some excess soils would be disposed of at local solid waste management facility.	**Construction**: No anticipated effects on infrastructure.	No new effects on infrastructure would occur.

	Proposed NECPL Project		
	Lake Champlain Segment	**Overland Segment**	**No Action Alternative**
	O&M/Repairs: No effect on local infrastructure anticipated, including EMF effects on communications infrastructure.	**O&M/Repairs**: No anticipated effects on infrastructure, including EMF effects on communications infrastructure.	
Recreation	**Construction**: Short-term displacement of recreational users during construction; temporary closure of fishing platform in Alburgh; temporary delay or interruption of ferry operations; no adverse effects from EMFs; however, boaters may see a small deviation if using a compass; global positioning system (GPS) would not be affected. **O&M/Repairs**: Minimal effects if repairs are needed; repairs probably would be restricted to a small geographic area; no permanent aboveground facilities would be constructed; no adverse effects on recreationists or recreational activities are anticipated from EMFs.	**Construction**: Short-term, temporary disturbances of recreational facilities and access near the Project route, especially cyclists using the roads along the construction route. **O&M/Repairs**: No adverse effects anticipated from EMFs.	No new effects on recreation use and access would occur.
Public Health and Safety	**Construction**: Minor effects on contractors' health and safety; no effects on general public health and safety; no adverse effects from EMFs. **O&M/Repairs**: Potential health and safety risks to contractors during operations; emergencies, if any, would be brief (i.e., less than 30 days) and local.	**Construction**: Minor effects on contractors' health and safety; no effects on general public health and safety; no adverse effects from EMFs. **O&M/Repairs**: Potential health and safety risks to contractors during operations; emergencies, if any, would be brief (i.e., less than 30 days) and local.	No new effects on public health and safety would occur.
Noise	**Construction**: Local temporary increases in noise (i.e., 1 hour peak of up to 80 dBA at 35	**Construction**: Local temporary increases in noise during cable	No new effects on noise from construction,

	Proposed NECPL Project		
	Lake Champlain Segment	**Overland Segment**	**No Action Alternative**
	feet) during cable installation but is limited to those areas where the cable enters and exits Lake Champlain; boaters may notice the increase in noise across the water; waterfowl and other birds would likely relocate temporarily away from construction noise. **O&M/Repairs**: No adverse effects of operation; temporary noise increases during maintenance, localized to specific geographic area.	installation; noise increases in the ROW probably would not be noticeable due to existing traffic and activity; temporary adverse effect of blasting on local area which would be temporary and expected to be a rare occurrence. **O&M/Repairs**: No adverse effects of operation; temporary noise increases during maintenance, localized to specific geographic area.	operation and maintenance would occur.
Hazardous Materials	**Construction**: Hazardous materials used in construction equipment present the potential for spill contamination of water or land in staging areas and could have a temporary adverse impact on water quality and sediments. **O&M/Repairs**: Minimal amount of oils, solvents, and other hazardous materials from operations and potential emergency repairs.	**Construction**: Cables do not contain hazardous fluids - no effect on soils; storage and use of hazardous materials during construction presents the potential for spill contamination in staging areas and in the ROW. **O&M/Repairs**: Minimal amount of oils, solvents, and other hazardous materials from operations and potential emergency repairs.	No new effects from hazardous materials and wastes would
Air Quality	**Construction**: Minor, local, temporary effects of use of diesel-powered engines, heavy equipment, barges, boats and generators; associated emissions of greenhouse gases (GHG) (9.9 tons per year).	**Construction**: Local, temporary effects of use of diesel powered engines, heavy equipment, and generators; associated emissions of GHG (4.5 tons per year) and fugitive dust. This represents a decrease over existing conditions.	No new effects from air quality would occur. GHG emissions would continue to occur at the present rate.

	Proposed NECPL Project		
	Lake Champlain Segment	**Overland Segment**	**No Action Alternative**
	O&M/Repairs: Effects of repairs would be less than those of construction; no violation of air quality standards.	**O&M/Repairs**: Effects of repairs would be less than those of construction; no violation of air quality standards. Operation of the Project is expected to decrease New England power plant emissions of carbon dioxide ("CO_2"), the primary constituent of GHGs by 32.9 million tons, equivalent to an 8.6% reduction, over a ten year study period; however, very little of that reduction would occur in Vermont, reflecting the limited in-state fossil-fueled generation.	
Socioeconomics	**Construction**: Minor, temporary increase in jobs in Vermont; no effect on population; no effects on children. **O&M/Repairs**: Employment in operation phase would be lower than in construction phase; tax payments to local towns and lease payments would provide funding to local economy; overall reduction in wholesale electric energy market prices.	**Construction**: Minor, temporary increase in jobs in Vermont; no effect on population or permanent housing or children. **O&M/Repairs**: Employment in operation phase would be lower than in construction phase; tax payments to local towns and lease payments would provide funding to local economy; overall reduction in wholesale electric energy market prices.	No new effects on socioeconomic resources would occur.

	Proposed NECPL Project		
	Lake Champlain Segment	**Overland Segment**	**No Action Alternative**
Environmental Justice	**Construction**: No disproportionate effect on minority or low-income populations. **O&M/Repairs**: No effect on minority or low-income populations.	**Construction**: No disproportionate effect on minority or low-income populations. **O&M/Repairs**: No effect on minority or low-income populations.	No new effects on environmental justice would occur.

3 AFFECTED ENVIRONMENT

The Region of Influence (ROI) for each resource is a geographic area within which the Project may exert some influence. The ROI is the geographic area described and assessed for each resource potentially affected by the Project. The ROI may be different for each resource. TDI-NE (2014a) provided ROIs based on the area resources and experience through the CHPE Project in New York. The DOE evaluated and agreed with the ROIs provided by TDI-NE as described in ***Table 3-1*** for the Lake Champlain and Overland segments.

3.1 LAKE CHAMPLAIN SEGMENT

3.1.1 LAND USE

3.1.1.1 Background on the Resource Area

This section describes existing land uses in the vicinity of the Lake Champlain Segment of the proposed NECPL Project route, and land use plans and policies applicable to the Lake Champlain Segment. General land use categories along the Project route are classified based on data from the Vermont Center for Geographic Information (VCGI) and Project photographs.

The ROI for land use for the Lake Champlain Segment of the Project is contained within the state of Vermont and consists of the area within 50 feet of either side of the centerline of the transmission cables. This area is defined as the ROI because it includes the permanent easement (i.e., ROW) within which the transmission line would be operated and maintained and the temporary work areas that would be affected during construction (i.e., construction corridors). The transmission line is proposed to be installed under Lake Champlain; therefore, effects on land use during the operational phase of the Project would be restricted to the property containing the transmission line.

3.1.1.2 Proposed NECPL Project

The Lake Champlain Segment of the Project would be located in Grand Isle, Chittenden, Addison, and Rutland counties. Vermont has jurisdiction within Lake Champlain below the mean lake level (95.5 feet) and the USACE has jurisdiction beyond the ordinary high water (98 feet) mark in the lake. ***Figure 2-1*** is a map of the Project route from Canada to Alburgh, through Lake Champlain. The general land use type (i.e. land cover type) in the Lake Champlain Segment ROI is open water. The 0.5 mile section in Alburgh, Vermont, while officially not in Lake Champlain, is described in the Lake Champlain Segment due to its short overland segment prior to entering the lake. The first 0.3 mile segment is proposed within the town of Alburgh Roads while the remaining 0.2 mile proposed segment (prior to entering the lake via HDD) is on property owned by TDI-NE.

General land uses within Lake Champlain include recreation (such as fishing, boating, swimming, and water sports) and other water-dependent uses such as transportation via ferry services. Ferry services in this segment include three routes across the lake run by the Lake Champlain Transportation Company (LCTC) and one in the southern part of the lake run by the Fort Ticonderoga Ferry Company. Vermont municipal land use plans and policies are not relevant for the portions of this segment that are entirely submerged under Lake Champlain.

TABLE 3-1 REGION OF INFLUENCE FOR NECPL PROJECT RESOURCES

Resource	Lake Champlain Segment	Overland Segment
Land Use	100 feet total 50 feet either side of centerline of cable	100 feet total 50 feet either side of centerline of cable
Transportation and Traffic	0.25 miles of construction corridor and cable route	Area within the construction corridor and intersections within 0.25 miles of the construction corridor
Water Resources and Quality	Lake Champlain from Alburgh to Benson	100 feet total 50 feet either side of centerline of cable
Aquatic Habitats and Species	Lake Champlain from Alburgh to Benson	Open water features such as rivers, ephemeral, intermittent and perennial streams, ponds, lakes, and marshes dominated by emergent vegetation; shrub swamps, forested wetlands, areas with lacustrine and palustrine unconsolidated bottom habitat, floodplain forest, riparian edges near construction corridor or areas where cable would go through
Aquatic Protected and Sensitive Species	Lake Champlain from Alburgh to Benson	Open water features such as rivers, intermittent and perennial streams, ponds, lakes, and marshes dominated by emergent vegetation; shrub swamps, forested wetlands, areas with lacustrine and palustrine unconsolidated bottom habitat, floodplain forest, riparian edges near construction corridor or areas where cable would go through
Terrestrial Habitats and Species	100 feet total 50 feet either side of centerline of cable	100 feet total 50 feet either side of centerline of cable
Terrestrial Protected and Sensitive Species	100 feet total 50 feet either side of centerline of cable	100 feet total 50 feet either side of centerline of cable
Wetlands	100 feet total 50 feet either side of centerline of cable	100 feet total 50 feet either side of centerline of cable
Geology and Soils	200 feet total 100 feet on either side of centerline of cable	200 feet total 100 feet on either side of centerline of cable
Cultural Resources	50 feet total 25 feet on either side of centerline of cable	50 feet total* 25 feet on either side of centerline of cable
Infrastructure	50 feet total 25 feet on either side of centerline of cable	50 feet total 25 feet on either side of centerline of cable
Recreation	1-mile for aquatic portion; 0.5 miles either side of centerline of cable	1-mile for aquatic portion; 0.5 miles either side of centerline of cable
Public Health and Safety	50 feet total 25 feet on either side of centerline of cable	50 feet total 25 feet on either side of centerline of cable
Hazardous Materials	Area within the construction corridor, construction staging areas, and the route that construction vessels would use to access the transmission cable	Area within the construction corridor, construction staging areas,
Air Quality	Counties of Grand Isle, Chittenden, Addison, and Rutland, Vermont	Counties of Rutland and Windsor, Vermont
Socioeconomics	Counties of Grand Isle, Chittenden, Addison, and Rutland, Vermont	Counties of Rutland and Windsor, Vermont
Environmental Justice	Counties of Grand Isle, Chittenden, Addison, and Rutland, Vermont	Counties of Rutland and Windsor, Vermont
Noise	1,200 feet total – 600 feet on either side of centerline of cable	1,200 feet total – 600 feet on either side of centerline of cable

*The total ROI for cultural resources will vary based upon the construction lay down areas along the Overland Segment

In the Town of Alburgh, zoning regulations exist; however, they would not pertain because the 0.5 mile section of the Project before it enters Lake Champlain has frontage on both public roads and waters. The regulations are specific to land development that does not have frontage either on a public road or public waters.

3.1.2 TRANSPORTATION AND TRAFFIC

3.1.2.1 Background on the Resource Area

This section describes the existing transportation systems, conditions, and travel patterns in the vicinity of the proposed Project route and is based upon:

- review of Internet Web searches, maps, aerial photography, and geographic information system (GIS) data;
- visits to selected locations along the proposed route for the transmission cables; and
- transportation data from the VTrans.

The ROI for transportation and traffic is the area within construction corridors for the Lake Champlain Segment and intersections within 0.25 miles of the construction corridors. The ROI for transportation and traffic includes the cable route and the area used by barge traffic related to construction.

3.1.2.2 Proposed NECPL Project

Lake Champlain is a navigable waterway that is no longer used for commercial shipping. The Narrows of Lake Champlain (a federal navigation channel) and the maintained channels into harbors are the only federally designated shipping lanes or recommended vessel routes within the lake. The Lake Champlain Segment would not traverse the narrows (TDI-NE 2014a).

Commercial marine navigation in Lake Champlain is limited to two ferry operations connecting points in the states of New York and Vermont, the LCTC and the Fort Ticonderoga Ferry Company. The LCTC operates three ferries (***Figure 3-1***) that cross the lake at the following locations:

1. Grand Isle, Vermont, to Plattsburgh, New York (24-hour service, year round);
2. Burlington, Vermont, to Port Kent, New York (seasonal, mid-June to mid-October); and
3. Charlotte, Vermont, to Essex, New York (varying schedule, year round) (LCF 2014).

The Fort Ticonderoga Ferry Company operates a seasonal, cable-guided ferry service between Shoreham, Vermont, and Ticonderoga, New York, from May through October. The cable guidance system was installed in 1946 and consists of two, 2.75-inch steel cables stretched parallel to each other across Lake Champlain and securely anchored in concrete on either end (FTF 2014). The cables are lifted and carried by four hardened steel sheaves (i.e., a wheel with a grooved rim), one on each corner of the present barge, that steer the barge between landing ramps at either end of the course. When not in use on the sheaves, the cables return to their resting place on the bottom of the lake and do not interfere with other boat traffic. The cables are replaced every 1 to 4 years (FTF 2014)

The aquatic transmission cables would be installed between MP 0.5 from Alburgh, Vermont to MP 98 at Benson Landing, Vermont. At MP 88, the proposed aquatic transmission cables would cross under the Ticonderoga-Larrabee Point Ferry cable crossing in Shoreham, Vermont. The Project would not traverse any existing anchorage areas.

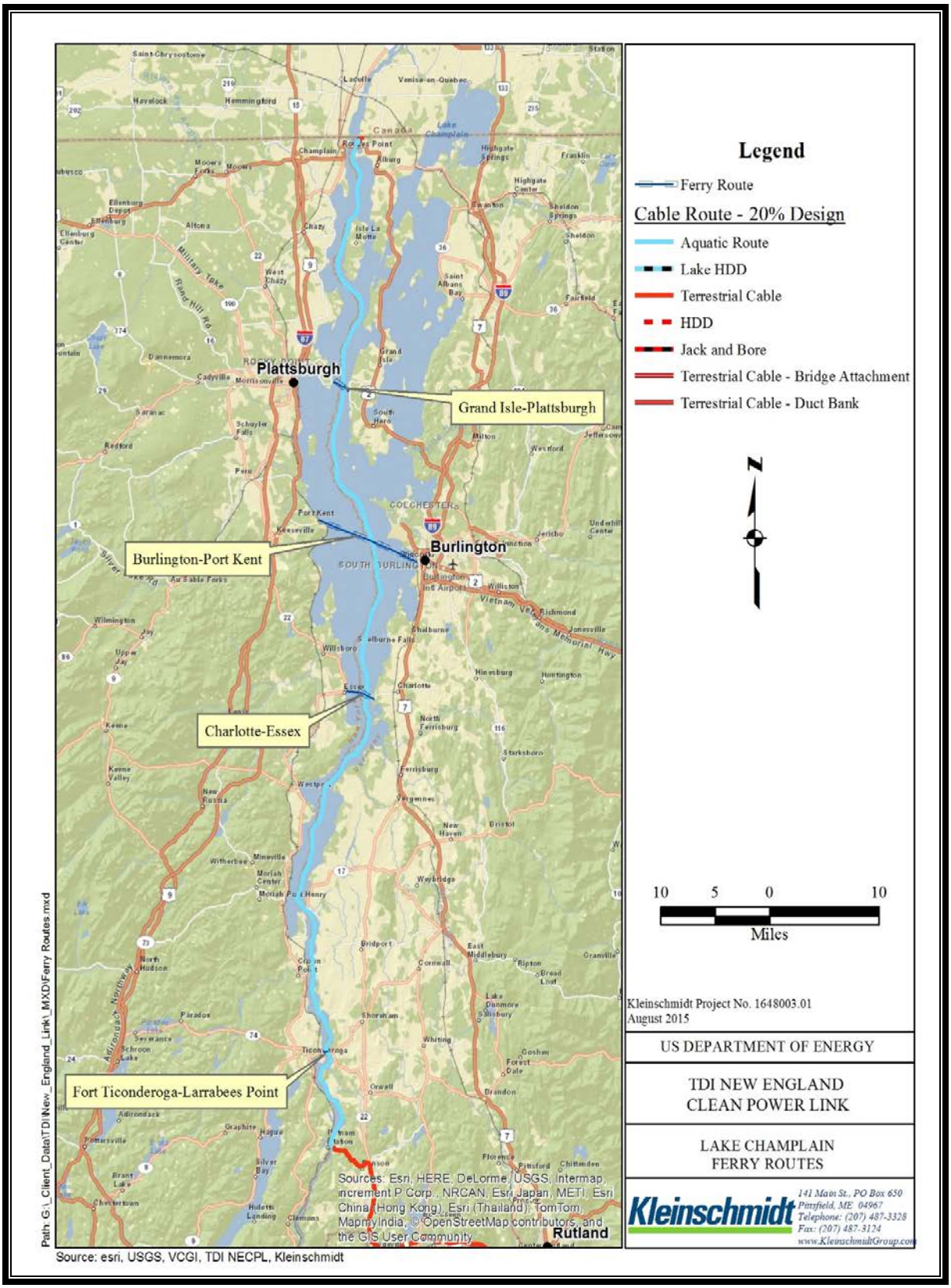

FIGURE 3-1 LAKE CHAMPLAIN FERRY ROUTES

In addition to supporting the commercial ferry operations, Lake Champlain provides a large variety of recreation opportunities, including fishing, bird watching, motor boating, commercial site seeing, kayaking, swimming, sightseeing, sailing, jet skiing, and scuba diving (TDI-NE 2014a).

3.1.3 WATER RESOURCES AND QUALITY

3.1.3.1 Background on the Resource Area

This section describes the existing water resources of the proposed NECPL Project. Water resources include groundwater, floodplains, and surface water, water quality, quantity and availability.

Although they are regulated separately, surface and ground water are intricately linked. Surface waters are open to the atmosphere, such as rivers, lakes, ponds, streams, and reservoirs, and are replenished by groundwater and precipitation. Uses of surface water include drinking water, irrigation, cooling of thermoelectric power industry equipment, agriculture, mining, and commercial/industrial uses (USGS 2014b). Recreational activities also occur on the surface water of Lake Champlain. Groundwater is located beneath the surface in soil pore spaces and in fractures in rock. Groundwater is recharged by precipitation that falls on the surface and is pulled by gravity through the soil until it reaches water-saturated rock (USGS 2014b). Groundwater helps provide base flow to rivers and lakes during dry periods and recharges surface water sources (VNRC 2012). Groundwater supports aquatic habitat and has many important uses, including irrigation, drinking water, manufacturing, and commercial uses. In 2008, Vermont passed Act 199[21] establishing new protection options for large groundwater withdrawals and declaring groundwater to be a public trust resource.

Floodplains are flat or nearly flat lands adjacent to a river or stream that experiences occasional or periodic flooding. It includes the floodway, which consists of the stream channel and adjacent areas that carry flood flows; and the flood fringe, which are areas covered by the flood that do not experience a strong current (DOE 2014). The Federal Emergency Management Agency (FEMA) delineates floodplains and determines flood risks in areas susceptible to flooding.

A watershed or drainage basin contains all the land that drains toward a body of water. Water flows by gravity through streams, rivers, wetlands, and groundwater to the water body. Most of the Project would be located in the Lake Champlain basin, which comprises eight sub-basins (located in Canada, New York and Vermont) that drain to the many rivers and tributaries that flow into the lake. These tributaries contribute approximately 90 percent of the water that enters Lake Champlain (LCBP 2006a). The major Vermont tributaries are Otter Creek, and the Missisquoi, Lamoille, LaPlatte, and Winooski rivers.

The Federal Safe Drinking Water Act requires states to develop programs to protect public water supplies from contamination. The state of Vermont has the authority to regulate all water systems (e.g., public and non-public water systems, bottled water systems, and privately owned systems) and to set standards for the construction of wells (VDEC 2010). Vermont created a Public Water Source Protection Program and a Source Water Assessment Program to protect public health by providing safe and clean drinking water. The Public Water Source Protection Program delineates Public Water Source Protection Areas (SPA) for all new sources of public community water systems. Public water systems must have a Source Protection Plan (SPP) to minimize the risk of water contamination.

The CWA established the structure for regulating the discharge of pollutants into waters of the United States and for developing water quality standards for surface water. United States waters include traditional navigable waters (e.g., rivers, streams, lakes, ponds, and wetlands), tributaries of navigable waters,

[21] An Act Relating to a Groundwater Withdrawal Permit Program

territorial seas, interstate waters, and adjacent waters. Any pollutant discharged from a municipal or industrial point source into navigable water must be regulated according to a permit issued by the EPA's National Pollutant Discharge Elimination System (NPDES). In Vermont, a NPDES permit must be obtained for the stormwater discharge from any construction activity that would disturb 1 or more acres. The permit must be supported by an Erosion Prevention and Sediment Control (EPSC) plan that includes information on the BMP used to prevent pollution.

According to CWA Section 303(d), states are required to develop a list of waters that are impaired by one or more pollutants. A body of water is determined to be impaired if it does not meet established state water quality standards. State water quality standards designate uses of water bodies and set criteria to protect those uses. In addition, states are required to rank water bodies on the CWA Section 303(d) list according to priority[22] and develop total maximum daily loads (TMDLs) for pollutants entering listed waters. The TMDL is the maximum amount of a pollutant that a listed water body can receive and still meet water quality standards. The TMDL also describes the pollutant reductions needed to meet the standard and may include an implementation plan explaining how the reductions would be achieved.

The Watershed Management Division of the Vermont Department of Environmental Conservation (VDEC) of the Vermont Agency of Natural Resources (VANR) is responsible for creating and maintaining water quality standards and surface water rules. The Vermont water quality standards (VWQS) include both numeric and narrative criteria. Surface waters in Vermont are designated as Class A or B (VDEC 2014c). Class A waters are further separated into Class A (1) Ecological Waters and Class A (2) Public Water Supplies and are managed for the enjoyment of water in its natural condition (i.e., as high-quality waters with significant ecological values or as sources of drinking water). Class B waters are managed to maintain a level of quality that fully supports the following uses: aquatic habitat, aquatic biota, and wildlife; aesthetics; irrigation of crops for human consumption (without treatment); public water supply with filtration and disinfection; and recreation, including swimming, boating and fishing (VDEC 2014c).

The VWQS narrative criterion for water temperature is that the rate of change of temperature shall be controlled to fully support aquatic biota, wildlife, and aquatic habitat (VDEC 2014c). Narrative criteria for phosphorus and nitrates involve limiting their introduction to waters so that they will not contribute to the acceleration of eutrophication or the stimulation of algal growth in a manner that prevents the full support of the state-designated water uses. An additional criterion involves preventing any negative change in solids (e.g., settleable, floating, or TSS), taste, odor, color, or alkalinity that would preclude the full support of the designated uses. Furthermore, Class A and B waters each have hydrology criteria regulating flow regimes and water surface level fluctuations. ***Table 3-2*** lists numeric criteria for Class A and B waters.

The VDEC classifies uses of surface water as defined by the VWQS (i.e., aquatic habitat and biota, recreation, aesthetics, fish consumption, agriculture) into four support categories: full support, stressed, altered, or impaired (VDEC 2014d). Full-support waters of high quality meet all use standards for the water's classification and management type. Stressed waters support the uses of the classification, but the habitat or water quality have been disturbed by point or nonpoint sources of pollution. Altered waters have water quality impairments due to factors other than pollutants that are related to human activity, such as lack of water flow, fluctuation in water surface elevation, modified hydrology, channel degradation, or a change in stream type. Impaired waters are in violation of one or more water quality standards (VDEC 2014d).

Both point and nonpoint sources of pollution affect water quality in Vermont. Point-source pollution originates from a single discharge point, such as a wastewater treatment plant, an industrial plant, a gas station, an underground tank, or an untreated agricultural field. Nonpoint-source pollution comes from

[22] Priority is an indicator as to when TMDLs will be completed (H=high 1-3 years, M=medium 4-8 years, L=low 8+ years).

diffuse sources (e.g., cities, homes, roads, agriculture, animal feedlots, forestry) and enters a body of water through groundwater discharge, stormwater runoff, erosion, and atmospheric deposition (LCBP 2006b). Stormwater runoff is precipitation that is not absorbed into the land surface that flows overland into streams, rivers, or lakes, carrying sediment, nutrients, and pollutants into the receiving water bodies.

The ROI for water resources and quality for the Lake Champlain Segment of the Project includes Lake Champlain from Alburgh, Vermont (MP 0.5), to Benson, Vermont (MP 98). This region represents the area where potential effects on water resources could occur.

3.1.3.2 Proposed NECPL Project

Surface Water

The Lake Champlain basin occupies an area of 8,234 square miles and includes portions of Vermont, New York, and the Province of Quebec. Lake Champlain occupies an area of 435 square miles, has 587 miles of shoreline, and is one of the largest freshwater lakes in the United States (LCBP 2006a). Lake Champlain originates in Whitehall, New York, then flows north through Vermont to its outlet at Richelieu River in Quebec. Water then flows north to the St. Lawrence River and drains to the Atlantic Ocean at the Gulf of St. Lawrence. Lake Champlain is approximately 120 miles long and 12 miles wide at its widest point, Mallets Bay.

Lake Champlain can be divided into five areas, each having different chemical and physical characteristics (from north to south): Missisquoi Bay, Inland Sea (or Northeast Arm), Mallets Bay, Main Lake, and South Lake (***Figure 3-2***). The water depth in Lake Champlain reaches more than 400 feet at its deepest point with an average depth of 64 feet (LCBP 2014). The water is shallower and warmer in the northern and southern portions of the lake. The deepest and coldest water is located in Main Lake, which contains nearly 81 percent of the volume of the lake. The retention time of water is highly variable and depends on location within Lake Champlain. The retention time is longest in the Main Lake (3 years) and shortest in South Bay (less than 2 months) (LCBP 2014). The Project would be located in the South Bay and Main Lake sections of Lake Champlain.

Lake Champlain has several public and commercial uses. Approximately 35 percent of the population of the Lake Champlain basin (200,000 people) relies upon the lake for drinking water (LCBP 2014). Ninety-nine public water systems draw water from the lake (LCBP 2014). Fifty-four public or commercial beaches and several private beaches rim the shoreline. Most beaches are located along the northern and central shorelines of the Main Lake (LCBP 2014). Other recreational uses of Lake Champlain include state parks, bird and wildlife viewing, boating, trails (walking, hiking or biking), and fishing. More than 70 islands are located throughout the lake.

TABLE 3-2 NUTRIENT CRITERIA FOR CLASS A(1), CLASS A(2), AND CLASS B WATERS

Nutrient Concentration or Response Condition	Class A(1)			Class A(2)			Class B		
	Streams[a]	Lakes and Reservoirs[b]	All Other Waters	Streams[a]	Lakes and Reservoirs[b]	All Other Waters	Streams[a]	Lakes and Reservoirs[b]	All Other Waters
Total Phosphorus (µg/l)	9-12[c]	12[d]		12-27[c]	17[d]	-	12-27[c]	18[d]	-
Nitrates (mg/l)	-	<5.0 as NO_3-N	<0.20[6], <2.0[7]	-	<5.0 as NO_3-N	<0.20[f], <2.0[g]	-	<5.0 as NO_3-N	<5.0 as NO_3-N
Secchi Disk Depth (meters)	-	5[e]	-	-	3.2[e]	-	-	2.6[e]	-
Chlorophyll-a (µg/l)	-	2.6[d]	-	-	3.8[d]	-	-	7.0[d]	-
pH	Not to exceed 8.5			Not to exceed 8.5			Not to exceed 8.5		
Turbidity	<10 NTU as an annual average under dry weather base-flow conditions			<10 NTU as an annual average under dry weather base-flow conditions			Cold Water Fish Habitat: <10 NTU as an annual average under dry weather base-flow conditions	Warm Water Fish Habitat: <25 NTU as an annual average under dry weather base-flow conditions	
Dissolved Oxygen									
Cold Water Fish Habitat	As exists under natural conditions			>6 mg/l and 70% saturation; >7 mg/l and 75% saturation in salmonid spawning and nursery habitat in areas important to the maintenance of the fishery			>6 mg/l and 70% saturation; >7 mg/l and 75% saturation in salmonid spawning and nursery habitat in areas important to the maintenance of the fishery		
Warm Water Fish Habitat	As exists under natural conditions			Not less than 5 mg/l and 60% saturation			>5 mg/l and 60% saturation		

[a]VWQS separate criteria into small and medium, high-gradient streams; and warm-water, medium gradient streams (VDEC 2014a)
[b]Lakes and reservoirs larger than 20 acres in surface area with a ratio of drainage area to surface area that is less than 500:1
[c]Not to be exceeded at low median monthly flow during June to October in a section of the stream representative of well-mixed flow
[d]June to September mean not to be exceeded in the photosynthetic zone at a central location in the lake
[e]June to September mean not to be less at a central location in the lake
[f]At flows exceeding low median monthly flows above 2,500 feet altitude
[g]At flows exceeding low median monthly flows at or below 2,500 feet altitude

Source: VDEC 2014c

Key:
- < less than
- µg/l micrograms per liter
- mg/l milligrams per liter
- N Nitrogen
- NO_3 Nitrate
- NTU Nephelometric Turbidity Units

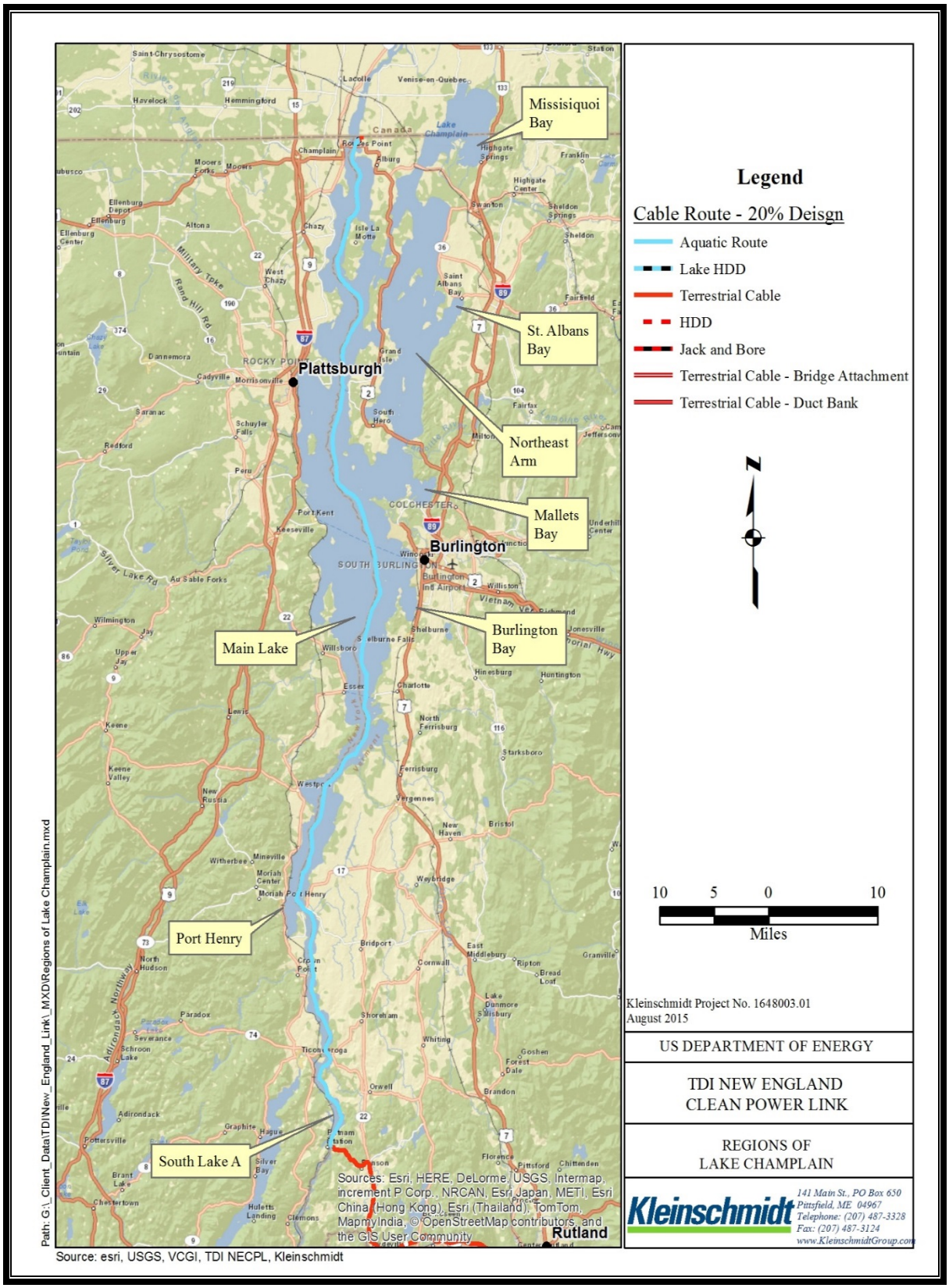

FIGURE 3-2 REGIONS OF LAKE CHAMPLAIN SEGMENT

Water Quality

The EPA approved Vermont's 303(d) List of Impaired Waters for 2014 (EPA 2014a) which includes Lake Champlain (VDEC 2014d). None of the water in the Vermont portion of Lake Champlain fully supports designated uses. The dominant cause of impairment in Lake Champlain is contamination of fish tissue with mercury and polychlorinated biphenyls (PCBs) (VDEC 2014d). Atmospheric deposition and improper waste disposal are the major sources of mercury and PCBs entering Lake Champlain. The next most widespread cause of impairment of the lake is phosphorus pollution, which affects aesthetic value and primary contact recreation (i.e., swimming). The major sources of phosphorus pollution are nonpoint sources (e.g., runoff, erosion) and municipal wastewater discharge (VDEC 2014d). Other sources of impairment include agriculture, runoff that is not related to construction (e.g., from highways, roads, and bridges), industrial discharge, natural sources, and post-development sedimentation and erosion. Portions of Lake Champlain are designated as altered due to Eurasian water milfoil and zebra mussel (*Dreissena polymorpha*) transported through recreational boating and fishing activities, and other exotic species that have been introduced into the lake. Stressed water uses are caused by *Escherichia coli* bacteria, Eurasian water milfoil and other invasive species, native plants, sedimentation, and zebra mussel (VDEC 2014d).

Phosphorus pollution is a significant cause of impairment in Lake Champlain. The states of Vermont and New York developed a TMDL for phosphorus entering Lake Champlain in 2002 that was approved by the EPA (VDEC 2002). The TMDL was disapproved in 2011 and is currently being revised. A completed Phase 1 implementation plan describes the nonpoint-source reductions that will be made basin-wide (VANR 2015). The Phase 2 plan will detail sub-basin implementation plans and will identify the planned point-source and nonpoint-source reduction measures in more detail.

The majority of waters in Lake Champlain and its tributaries are designated as Class B. Lake Champlain is divided into 12 segments for phosphorus management, and each segment has its own total phosphorus (TP) management criterion (VDEC 2014d). The TP criteria range from 10 to 54 μg/l as the annual mean TP concentration in the photosynthetic zone in the central open water areas of each segment. In 2012, the TP concentration in 11 of the 12 segments exceeded the criteria (LCBP 2012). Across the 12 segments, phosphorus has remained relatively stable or has increased over the past two decades (LCBP 2012; VANR 2014).

The VDEC and New York State Department of Environmental Conservation (NYSDEC) have been conducting the Lake Champlain Long-Term Water Quality and Biological Monitoring Project since 1992. This monitoring project provides a long-term data set for several important water quality parameters with which to monitor changes in the health of Lake Champlain and to monitor the effects of management actions on water pollution. The monitoring network includes 15 stations throughout the lake and 21 tributaries to the lake. A 2013 report of 18 tributaries to the lake identified an overall reduction in the fluctuation of dissolved phosphorus (DP), the total nitrogen (TN) fluctuation and concentration, and the fluctuation and concentration of chloride on the eastern side of Lake Champlain from 1990 to 2011 (Medalie 2013). ***Table 3-3*** lists water quality results from sampling conducted in 2013.

TABLE 3-3 2013 LAKE CHAMPLAIN MINIMUM AND MAXIMUM VALUES OF KEY WATER QUALITY PARAMETERS

Parameter	Minimum	Maximum
Total Phosphorus (µg/l)	6.3	70.6
Total Nitrogen (mg/l)	0.2	1.8
Alkalinity (mg/l)	31.5	98.0
Chlorophyll-a (µg/l)	1.0	74.2
Temperature (°C)	3.5	28.1
Dissolved Oxygen (mg/l)	1.1	13.4
Secchi Depth (m)	0.3	8.0
Calcium (mg/l)	11.5	32.6
Chloride (mg/l)	6.2	24.2
Magnesium (mg/l)	2.3	7.1
Potassium (mg/l)	0.8	1.7
Sodium (mg/l)	4.2	14.6

Source: VDEC and NYSDEC 2014

Floodplains

Lake Champlain occurs within a 100-year floodplain. As a result, Lake Champlain is categorized as Zone AE (High Risk Area) with an established base-flood elevation of 102 feet above mean sea level (MSL) (FEMA 2014).

Groundwater

Approximately 35 percent of the population of the Lake Champlain basin (200,000 people) relies upon the lake for drinking water (LCBP 2014). Vermont's groundwater is stored underground within tightly folded and broken (faulted or fractured) rock resulting from uplift of the Green Mountains (VDEC 2003). In 2005, approximately 12 percent of total water withdrawals were from groundwater sources, representing 51 million gallons per day (Mgal/d); the remaining 88 percent of withdrawals (389 Mgal/d) were from surface water sources (Medalie and Horn 2010). Most groundwater was used for domestic purposes (46 percent), followed by community water systems (30 percent), fish hatcheries (9 percent), commercial and industrial uses (8 percent), and livestock (6 percent). Groundwater withdrawals in the Lake Champlain basin ranged from less than 0.1 to 3 Mgal/d (Medalie and Horn 2010).

3.1.4 AQUATIC HABITATS AND SPECIES

3.1.4.1 Background on the Resource Area

This section describes the aquatic habitats and species that occur in the Lake Champlain Segment of the Project area, except for protected and sensitive species, which are discussed separately in ***Section 3.1.5***. The aquatic portion of the cable either would be buried below the lakebed or, in deep areas (greater than 150 feet), would lay on top of the lakebed and expect to self-bury.

The aquatic portions of the proposed Lake Champlain Segment includes the freshwater habitats extending from the shoreline in the town of Alburgh, Vermont, and continuing 97.6 miles within jurisdictional waters of Vermont to the town of Benson, Vermont. This region represents the area where potential effects on aquatic habitats and species could occur.

3.1.4.2 Proposed NECPL Project

Aquatic Habitat and Vegetation

Lake Champlain provides diverse habitat for aquatic species. Littoral habitat includes near-shore areas such as outcroppings, grassbeds, and debris that provide refuge and forage habitat for fish species. The littoral zone (less than 50 feet) is typically very productive and provides ideal conditions for young fish and forage species. Open lake waters represent pelagic habitats, which are typically cooler and less productive than littoral habitat. Strong thermoclines in the summer provide suitable conditions for the various warmwater, coolwater, and coldwater fish. Pelagic fish spend most of their life cycle in the open lake, except when spawning. Demersal habitat includes the bottom waters and benthic habitat along the bed of Lake Champlain. Benthic habitat supports a variety of macroinvertebrates that could serve as prey for demersal fish species. The bottom of Lake Champlain is composed of a variety of substrates including mud, clay, silt, sand, gravel, cobble, boulders, bedrock outcrops, logs, and organic material such as tree limbs or leaves.

Due to the penetration of sunlight, aquatic vegetation is common in the littoral zone of lake shorelines. SAV species common in Lake Champlain consist mainly of several species of milfoils (*Myriophyllum spp.*), pondweeds (*Potamogeton spp.*), and water celery (*Vallisneria americana*) (VDEC 2014b). Based on the *Lake Champlain Basin Aquatic Nuisance Species Management Plan* revised in 2005, 2 of the 13 priority aquatic nuisance species listed for Lake Champlain are present in the lake: Eurasian milfoil (*Myriophyllum spicatum*) and water chestnut (*Trapa natans*). Nuisance species negatively affect native species because nuisance species can proliferate rapidly and create overcrowding conditions in which native species are unable to thrive.

Shellfish and Benthic Communities

Historically, the benthic environment of Lake Champlain supported a variety of native species including mussels, freshwater crustaceans, insects, snails, clams, and worms. Factors such as habitat, food source, flow regime, temperature, and water quality determine the composition of the macroinvertebrate community. Macroinvertebrates associated with good water quality include mayflies, stoneflies, and caddisflies; macroinvertebrates associated with poor water quality include midges, black fly larvae, annelids, and sowbugs.

The invasion of the nonnative zebra mussel into Lake Champlain in 1993 drastically changed conditions in the benthos such that areas of high density of zebra mussels have been transformed from sandy substrate into a harder substratrum dominated by shells (Schmidlin et al. 2012). Studies show that benthic macroinvertebrate communities have declined by 33 percent in deep areas since the 1990s (FTC 2009).

HDR Engineering conducted a survey to identify mussel species along the proposed cable route in July and August of 2014 (HDR 2014a). Surveyors systematically sampled representative sites along the proposed cable route in Lake Champlain from the entrance point near the town of Alburgh south to Fisk Point off the Isle La Motte. The surveyors used both semi-quantitative, timed-search and quantitative, quadrat survey methods where depths were less than 30 feet because mussel species generally are distributed where water depths do not exceed 30 feet. The invasive zebra mussel dominated the observed species, and very few native species of mussels were observed. Only 3 of the 24 sites sampled contained a few live specimens of Eastern elliptio (*Elliptio complanata*) and Eastern lampmussel (*Lampsilis radiata*). Surveyors observed only a single relic shell of Eastern floater (*Pyganodon cataracta*). HDR (2014a) reported that the freshwater mussel community of the northern section of Lake Champlain, including the area of the proposed cable route, appears to have been decimated by the presence of the invasive zebra mussels. The live native mussels that were observed were sufficiently covered in zebra mussels to ultimately lead to death.

Fish

Lake Champlain supports a variety of resident and migratory species that can be classified by temperature preferences, trophic-level habitats, and migratory status in the Lake Champlain basin (FTC 2009). Classification by temperature preference includes three distinct groups: coldwater, coolwater, and warmwater species. In general, warmwater fish prefer summer temperatures between 80°F[23] and 87°F; coolwater fish prefer summer temperatures between 69°F and 77°F, and coldwater fish generally prefer summer temperatures cooler than 59°F (Trzaskos and Malchoff 2006); some coldwater species, such as brook trout, prefer water temperatures up to 68°F. More than 70 species of fish occur within the Lake Champlain Segment of the proposed cable route; ***Table 3-4*** presents the subset of freshwater fish species common to Lake Champlain and their life history characteristics.

In accordance with the *Lake Champlain Fisheries Management Plan* (Marsden et al. 2010), fish stocking is important for (1) providing fishing opportunity, (2) developing spawning populations of species needing rehabilitation, and (3) maintaining progress in restoring the biological integrity of fish communities. In 2014, the Vermont Fish and Wildlife Department (VFWD) planned to stock Lake Champlain with more than 346,000 yearling landlocked salmon (*Salmo salar*), steelhead (*Oncorhynchus mykiss*), brown trout (*Salmo trutta*), and lake trout (*Salvelinus namaycush*), and more than 128,000 landlocked salmon fry, and fingerlings (VFWD 2014). The NYSDEC stocked landlocked salmon, lake trout, and brown trout in 2012.

3.1.5 AQUATIC PROTECTED AND SENSITIVE SPECIES

3.1.5.1 Background on the Resource Area

The ROI for aquatic protected and sensitive species for the Lake Champlain Segment of the Project includes Lake Champlain from the town of Alburgh (MP 0.5) south to the town of Benson, Vermont (MP 98). This region represents the area where potential effects on aquatic protected and sensitive species could occur.

[23] Temperature shown in Fahrenheit

TABLE 3-4 COMMON FISH SPECIES IN LAKE CHAMPLAIN AND THEIR LIFE HISTORY CHARACTERISTICS

Common Name	Scientific Name	Temperature Preference	Trophic Level	Habitat	Spawning & Egg Hatch Season/Habitat
Resident Species					
Lake herring[1]	*Coregomus artedi*	Cold	Forage	Pelagic	Late fall/shallow water over gravel with no vegetation
Lake whitefish[1]	*Coregomus clupeaformis*	Cool	Forage	Pelagic	Fall/near-shore over coarse substrate
Yellow perch[2]	*Perca flavescens*	Cool	Forage	Littoral	Spring/shallow areas with sand, gravel, vegetation
Largemouth bass[2]	*Micropterus salmoides*	Warm	Predator	Littoral	Spring-summer/near-shore vegetated areas with gravel substrate
Smallmouth bass[2]	*Micropterus dolomieu*	Warm	Predator	Littoral	Spring/near-shore gravel areas
Pumpkinseed[2]	*Lepomis gibbosus*	Warm	Predator	Littoral	Spring to mid-summer/near-shore vegetated areas with sand, gravel, rock
White crappie[2]	*Pomoxis annularis*	Warm	Predator	Littoral	Spring/turbid waters over gravel, rock
Black crappie[2]	*Pomoxis nigromaculatus*	Warm	Predator	Littoral	Spring to early-summer/shallow vegetated areas with sand
Migratory Species					
Sea lamprey[1]	*Petromyzon marinus*	Cold	Predator	Pelagic	Spring-summer/rocky streams with gravelly substrate
Atlantic salmon[1]	*Salmo salar*	Cold	Predator	Pelagic	Fall through early spring/streams with gravelly substrate
Steelhead[2]	*Oncorhynchus mykiss*	Cold	Predator	Pelagic	Spring/streams with gravelly substrate
Alewife[2]	*Alosa pseudoharengus*	Warm	Forage	Pelagic	Spring-summer/broadcast eggs in shallow lake areas over rocks, sand, or mud
Rainbow smelt[2]	*Osmerus mordax*	Cold	Forage	Pelagic	Late winter or early spring/areas of streams with gravel bottom and sufficient velocity
Lake trout[1]	*Salvelinus namaycush*	Cold	Predator	Demersal	Fall through winter/rocky shoals in shallow areas of lakes and streams
Walleye[2]	*Sander vitreum*	Cool	Predator	Littoral	Spring/streams and shoals with rocky bottoms and sufficient current
Northern pike[2]	*Esox lucius*	Cool	Predator	Littoral	Spring/shallow, vegetated marshes
American eel[1]	*Anguilla rostrata*	Warm	Predator	Littoral	Late summer-fall/Sargasso Sea
Brown trout[2]	*Salmo trutta*	Cold	Predator	Littoral	Fall through spring/over gravelly riffles in streams and shallow headwaters
Lake sturgeon[1,3]	*Acipenser fulvescens*	Cold	Forage	Demersal	Spring/large, clean substrate with flowing water

[1] Kart et al. 2005
[2] DOE 2014
[3] Donelson et al. 2010

3.1.5.2 Proposed NECPL Project

Federally Listed or Protected Species
No aquatic species listed as threatened or endangered according to the federal Endangered Species Act (ESA) are known to occur in the Lake Champlain Segment.

State-listed Species
Lake sturgeon (*Acipenser fulvescens*) is the only state-listed threatened or endangered fish species that may occur in the Lake Champlain Segment. Lake sturgeon is listed as endangered in Vermont and typically inhabits mud, sand, and gravel. Lake sturgeon spawns in the spring from May to June in areas of clean, large rubble, such as along windswept, rocky island shores and in rapids of streams. Deep holes near spawning areas are important for staging. Lake sturgeon may use lake habitat seasonally; however, spawning typically occurs in riverine settings where velocities are sufficient to provide clean, rubble substrate for egg deposition. Although recent investigations have documented the presence of adult sturgeon during the spawning season in both the Lamoille and Winooski rivers and eggs have been collected in the Lamoille, Winooski, and Missisquoi rivers, no spawning adults or eggs were observed in Otter Creek (Marsden et al. 2010).

State-listed endangered mussel species include the fragile papershell (*Leptodea fragilis*), giant floater (*Pyganodon grandis*), pink heelsplitter (*Potamilus alatus*), and pocketbook (*Lampsilis ovate*). None of these species were observed in the 2014 mussel survey conducted along the proposed cable route (HDR 2014a). The lack of these species in the northern section of Lake Champlain, including the area of the proposed cable route, is likely due to the dominance of the invasive zebra mussels.

3.1.6 TERRESTRIAL HABITATS AND SPECIES

3.1.6.1 Background on the Resource Area

This section describes the terrestrial habitats and species within the Lake Champlain Segment of the proposed NECPL Project route. Terrestrial habitats and species in the Lake Champlain Segment are limited to the 0.5-mile section from the Canadian border to Lake Champlain in the town of Alburgh. The Vermont Natural Heritage Inventory (NHI) identifies habitats of significance based on rare or high-quality wetlands, communities, or other types of habitats or important ecological areas within Vermont. No habitats of significance are located within the terrestrial portion of the Lake Champlain Segment (TRC 2014).

The ROI for terrestrial habitats and species within the Lake Champlain Segment is 100 feet, extending 50 feet on either side of the cable centerline of the proposed transmission line route. This area includes the construction corridor and adjacent areas that would be affected during construction. The temporary construction area is 20 to 50 feet wide; this region represents the area where potential effects on terrestrial habitats and species could occur (TDI-NE 2014a).

3.1.6.2 Proposed NECPL Project

Most of the Lake Champlain Segment would be installed within aquatic habitat. Habitats present in the terrestrial portion of the Lake Champlain Segment are limited to forest edge and open lawns associated with residential structures along Bay Road in Alburgh (***Appendix C-Sheet 1***). Where natural vegetation occurs, the shoreline of Lake Champlain is characterized by early successional forest and shrublands. The majority of the habitat within the terrestrial portion of the Lake Champlain Segment in Alburgh is agricultural fields and manicured residential lawns. Forested portions are hardwood-dominated hedge rows or road ROW are immediately adjacent to Bay Road. Common species within

forested areas include eastern hemlock (*Tsuga canadensis*), pine (*Pinus spp.*), birch (B*etula spp.*), American beech (*Fagus grandifolia*), maple (*Acer spp.*), and occasional oak (*Quercus spp.*) (TDI-NE 2014a). The Alburgh portion of the Lake Champlain Segment has a relatively low invasive species cover, as compared to the remaining terrestrial sections of the proposed Project. Common species include honeysuckle (*Lonicera sp.*), purple loosestrife (*Lythrum salicaria*), and common buckthorn (*Rhamnus carthartica*). Flowering rush (*Butomus unmellatus*) and Oriental bittersweet (*Celastrus orbiculatus*) are also noted as being present along the Lake Champlain shoreline (AE 2014c).

Terrestrial wildlife species present within the Lake Champlain Segment are limited to species that may enter the ROI (e.g., birds and bats) by flying over Lake Champlain or which occur along the shoreline. A variety of song birds, raptors, passerines, and wading and game birds are found along the Project route, and many may occasionally be found over Lake Champlain. Bird species found along the shoreline may include mallard ducks (*Anas platyrhynchos*), red-tailed hawk (*Buteo jamaicensis*), red-winged blackbird (*Agelaius phoeniceus*), sparrows, and warblers. Mammals may include Indiana bat (*Myotis sodalis*), eastern red bat (*Lasiurus borealis*), and hoary bat (*Lasiurus cinereus*); and common semi-aquatic mammals such as muskrat (*Ondrata zibethicus*), mink (*Neovison vison*), and beaver (*Castor canadensis*) (TDI-NE 2014a; DeGraff and Yamasaki 2001).

Terrestrial species potentially occurring within the Alburgh portion of the Lake Champlain Segment include a variety of mammals, amphibians, reptiles, birds, and invertebrate species. Species diversity within this segment is limited due to agricultural and residential land use and the limited amount of usable habitat along Bay Road. Species less averse to human disturbance and that prefer early successional habitats or residential areas live here. Common mammals in this terrestrial portion may include woodchuck (*Marmota monax*), deer mouse (*Peromyscus maniculatus*), and meadow vole (*Microtus pennsylvanicus*). Forest edge habitat or areas adjacent to roadways may support larger mammals such as white-tailed deer (*Odocoileus virginianus*), coyote (*Canis latrans*), red fox (*Vulpes vulpes*), raccoon (*Procyon lotor*), striped skunk (*Mephitis mephitis*), and gray squirrel (*Sciurus carolinensis*). Herptiles may include the American toad (*Bufo americanus*) and the common garter snake (*Thamnophis sirtalis*) (TDI-NE 2014a). Birds potentially occurring within the Alburgh portion of the Lake Champlain Segment include red-winged blackbirds, sparrows, red-winged hawk, black-billed cuckoo (*Coccyzus erythropthalmus*), brown thrasher (*Toxostoma rufum*), and occasionally ruffed grouse (*Bonasa umbellus*).

3.1.7 TERRESTRIAL PROTECTED AND SENSITIVE SPECIES

3.1.7.1 Background on the Resource Area

This section addresses the protected and sensitive terrestrial species within the Lake Champlain Segment of the proposed Project route. These species are protected under the federal ESA (50 CFR Part 17) or Vermont's Endangered Species Law (10 Vermont Statutes [V.S.A.] Chapter 123). Migratory birds are regulated by the Migratory Bird Treaty Act (MBTA) (16 U.S.C 703-712) and while bald eagles (*Haliaeetus leucocephalus*) are no longer regulated under the ESA, they still maintain protections under the Bald and Golden Eagle Protection Act (BGEPA) (16 U.S.C 668 (a); 50 CFR 22).

The ROI for protected and sensitive terrestrial species along the Lake Champlain Segment is 100 feet, extending 50 feet on either side of the transmission line centerline. This region represents the area where potential effects on terrestrial protected and sensitive species could occur (TDI-NE 2014a).

3.1.7.2 Proposed NECPL Project

Protected and sensitive terrestrial species present within the Lake Champlain Segment ROI are the Indiana bat (*Myotis sodalis*), bald eagle (*Hailiaeetus leucocephalus*), little brown bat (*Myotis lucifugus*) and the northern long-eared bat (*Myotis septentrionalis*). These species roost, nest, and forage over terrestrial habitats and are also known to forage over or near water bodies. No protected or sensitive plant species have been identified within the terrestrial portion of the Lake Champlain Segment ROI, and no critical habitat for protected or sensitive terrestrial species occurs within the Lake Champlain Segment ROI. ***Table 3-5*** lists the species protected by federal or state laws or proposed for listing that may occur in the Lake Champlain Segment ROI (TDI-NE 2014a).

TABLE 3-5 FEDERAL AND STATE PROTECTED TERRESTRIAL WILDLIFE SPECIES THAT MAY OCCUR WITHIN THE LAKE CHAMPLAIN SEGMENT ROI

Common Name	Scientific Name	State Status	Federal Status
Bald eagle	*Hailiaeetus leucocephalus*	E	D-
Little brown bat	*Myotis lucifugus*	E	-
Northern long-eared bat	*Myotis septentrionalis*	E	T
Indiana bat	*Myotis sodalis*	E	E
E= Endangered, T=Threatened, D= Delisted, C= Candidate species for listing			

Source: VNHI 2012; TDI-NE 2014a

Federally Listed or Protected Wildlife Species

Indiana Bat

The Indiana bat is an endangered species protected under the federal ESA. Summer roosting habitat for the Indiana bat is known to occur in portions of the Lake Champlain Segment. Indiana bats may travel more than 100 miles after exiting winter hibernacula and form roosting and maternity colonies in crevices and loose bark of live and dead trees during the summer months. Foraging occurs along river and lake shorelines as well as at forest edges and the edges of clearings. The Lake Champlain Segment does not include a large amount of roosting habitat because it is primarily aquatic, and terrestrial portions only occur along existing ROWs. Within the Lake Champlain Segment ROI, Indiana bats are most likely to use the lake shoreline for foraging. Some summer roosting may occur within areas of the Lake Champlain Segment, but these areas are limited (AE 2014; TDI-NE 2014a).

Northern Long-eared Bat

The northern long-eared bat is found in the United States from Maine to North Carolina, west to Oklahoma, and as far north as eastern Montana and Wyoming. The northern long-eared bat overwinters in caves or abandoned mines and selects summer roosts in the bark or cavities of live or dead trees. The northern long-eared bat may roost individually or in small groups during the summer months. The bat's diet consists of small insects, and it forages at dusk over water or forested areas. The VFWD currently lists the northern long-eared bat as endangered. The Center for Biological Diversity petitioned the U.S. Fish and Wildlife Service (FWS) in 2010 to list the northern long-eared bat as federally endangered. On October 2, 2013, the FWS proposed to list the bat throughout its entire rage. In April 2015, the northern long-eared bat was listed as federally threatened. Based on habitat preferences and feeding behavior, the northern long-eared bat may be present within the Lake Champlain Segment during foraging periods or summer roosting (TRC 2014; TDI-NE 2014a).

Bald Eagle
The bald eagle was delisted from the ESA in 2007 but retains protected status under the BGEPA (16 U.S.C. 668-668C). The bald eagle continues to be listed as endangered in Vermont. Bald eagles spend the winter months roosting near large inland waterbodies that maintain areas of open water, and they prefer dense stands of large softwood trees (e.g., white pine) for roosting and nesting sites. Lake Champlain is a preferred location for winter congregations of bald eagles; therefore, eagles may occur within the Lake Champlain Segment ROI (TRC 2014; TDI-NE 2014a).

State-listed Wildlife Species

Little Brown Bat
The little brown bat has an extensive range that includes forested areas within most of the contiguous United States, including Alaska, and much of Canada. This species often uses residential structures for nursery colonies; day roosts may include tree cavities or small crevices. The little brown bat is not averse to development. This species' diet consists primarily of invertebrates, so the bats often forage over waterbodies. An estimated 90 percent of the population has been lost due to the proliferation of White Nose Syndrome, which kills infected bats. Based on available habitat and the presence of shoreline residential development, the little brown bat may occur within the Lake Champlain Segment ROI (TRC 2014; TDI-NE 2014a).

Migratory Birds
Much of Vermont is within the flight path of migratory waterfowl, shorebirds, and birds of prey. Approximately 250 species of birds can be found in the Lake Champlain basin in a given year. Migrating birds that may pass over the Lake Champlain Segment ROI include ring-billed gull (*Larus delawarensis*), herring gull (*L. argentatus*), great black-backed gull (*L. fuscus*), Bonaparte's gull (*L. philidelphia*), double-crested cormorant (*Phalacrocorax auritus*), Caspian tern (*Hydroprogne caspia*), great blue heron (*Ardea herodias*), green heron (*Burtorides virescens*), American bittern (*Botaurus lentiginosus*), black-crowned night heron (*Nycticorax nyctocorax*), great egret (*Ardea alba*), common merganser (*Mergus merganser*), mallard, wood duck (*Aix sponsa*), and common goldeneye (*Bucephala clangula*) (TRC 2014; TDI-NE 2014a).

Migratory birds of prey that may pass over the Lake Champlain Segment ROI include osprey (*Pandion haliaetus*), bald eagle, northern harrier (*Circus cyaneus*), sharp-shinned hawk (*Accipiter striatus*), Cooper's hawk (*Accipiter cooperii*), red-shouldered hawk (*Buteo lineatus*), broad-winged hawk (*B. platypterus*), red-tailed hawk, peregrine falcon (*Falco peregrines*), and northern goshawk (*Accipiter gentilis*) (TRC 2014; TDI-NE 2014a).

3.1.8 TERRESTRIAL WETLANDS

3.1.8.1 Background on the Resource Area

Wetlands and waterbodies are protected as waters of the United States under Section 10 of the Rivers and Harbors Act and Section 404 of the CWA. Waters of the United States include navigable waters, inland rivers, lakes, streams, and wetlands. The Vermont Wetland Rules (VWR) classify wetlands into one of three classes. Class I wetlands have the highest rank, and lower quality wetlands are ranked II or III depending on various criteria. Class I wetlands provide exceptional or irreplaceable functions in their contribution to Vermont's natural heritage, and Class II wetlands provide significant functions that merit protection under the VWR. Class I and II wetlands and the associated buffers are regulated under the VWR. According to the VWR, Class III wetlands are not typically regulated by the state.

The ROI for wetland habitat along the Lake Champlain Segment is 100 feet, extending 50 feet on either side of the centerline of the transmission line (TDI-NE 2014a).

3.1.8.2 Proposed NECPL Project

No terrestrial wetlands are identified within the Lake Champlain Segment because the lake is considered open water. The transmission cable would be buried within the lake sediment (the sediment does not support wetlands). The edge of open water was identified in 2014 by the field-determined ordinary-high-water line (VHB 2014). The terrestrial portion of the Lake Champlain Segment within Alburgh would be collocated along an existing ROW and within an active agricultural field. Two wetlands occur within the terrestrial portion of the Lake Champlain Segment. The first is located to the north of Bay Road, near MP 0.1 and is adjacent to a residential lawn. The second wetland, near MP 0.5, occurs within an agricultural area and riparian forest area; consequently, the two wetlands within the ROI are currently disturbed by active mowing related to the residential parcel and agricultural activities in the field which borders Lake Champlain (TRC 2015).

3.1.9 GEOLOGY AND SOILS

3.1.9.1 Background on the Resource Area

This section addresses the geology, topography and physiography, sediments, and geological hazards (e.g., seismicity) associated with the Lake Champlain Segment of the proposed NECPL Project route including the 0.5 mile portion of the segment located in Alburgh, Vermont.

For the purposes of this analysis, the ROI for geology and soils is defined as 100 feet on each side of the centerline of the proposed transmission route. This ROI was selected based on construction activities that may affect geology and soils within this area.

3.1.9.2 Proposed NECPL Project

Physiography and Topography
The Lake Champlain Segment of the Project is within the U.S. Forest Service (USFS) ecoregion known as the St. Lawrence and Champlain Valley Section in the Laurentian Mixed Forest Province of the warm continental division of the humid temperate domain. This region was glaciated as recently as 12,000 years ago and is characterized by wave-cut terraces and low hills (USFS 2005). Elevations range from 80 to 1,000 feet above MSL and increase gradually eastward and westward from Lake Champlain (USFS 2014).

Geology
The geology within the Lake Champlain Segment is dominated by Lake Champlain and, formerly, Lake Vermont. As the Pleistocene-aged glaciers began to melt and recede, remaining ice and debris jams formed glacial meltwater to the south, resulting in the formation of Lake Vermont, which was approximately 500 feet deeper than the current depth of Lake Champlain. Once the glaciers retreated, salt water entered the lake because the surrounding land was still depressed from the weight of the ice sheet. Eventually, the land surface rebounded, and water returned to a northern flow, producing the modern day Lake Champlain basin between the Adirondack and Green mountains. Deposits left by the retreating glacier range from massive boulders and cobbles to fine sands and silt (Henry Sheldon Museum 2004). Geologic formations in the St. Lawrence Valley Section are mostly carbonate and shale with some sandstones (USFS 2005).

Lake Champlain is surrounded by Pleistocene marine clays overlaying older, lacustrine, silty clays, below which lies bedrock. The bedrock is mainly Ordovician carbonate and shale, with some sandstones from the Cambrian period (USFS 2014). Sedimentary rocks such as limestone, dolostones, and quartzite dominate most of the shoreline of Lake Champlain.

Sediments/Soils

Covering the bedrock is surficial material (e.g., boulders, gravel, sand, clay, and glacial till) that was deposited as glaciers retreated approximately 12,000 years ago. Surficial sediments in the northern portion of Lake Champlain are primarily fine-grained. Bottom currents affect sediment distribution within the lake. When the lake stratifies in summer, wind currents can set up underwater currents called seiches in the lake. The seiches in Main Lake of Lake Champlain can resuspend sediments and cause unique sedimentary features on the lake bottom. Groundwater movement can also affect sediment distribution on the bottom of Lake Champlain (Sabick et al. 2014).

Phosphorus is the primary nutrient of concern in the Lake Champlain sediments and exceeds target phosphorus concentrations throughout much of the lake. From 2007 to 2012, sediment monitoring displayed an increasing trend in phosphorus concentrations in Main Lake, Burlington Bay, and Port Henry. In other locations, such as Missisquoi Bay, St. Albans Bay, and South Lake A, phosphorus levels have been more stable in recent years but still exceed the target concentrations. In other locations, phosphorus is at or near the target concentrations (LCBP 2012).

Mercury occurs in moderate concentrations in sediments throughout Lake Champlain, while PCB contamination is more localized, previously in Cumberland Bay where a large scale removal process occurred. Arsenic, lead, nickel, and zinc are moderately elevated in sediments throughout much of the lower two-thirds of the lake; polycyclic aromatic hydrocarbon (PAH), PCBs, and several trace metals including chromium, copper, and silver, are elevated at specific sites in Lake Champlain (McIntosh 1994).

Soils in the Alburgh section of the Lake Champlain Segment (Grand Isle County) were developed in glacial material, recent alluvium, or organic deposits. These soils are underlain by shale, slate, limestone and dolostone. Bog (organic) soils and other wet soils such as Carlisle, Livingston and Balch are found in Alburgh. This general soil area covers about 10 percent of Grand Isle County and has its largest acreage in the town of Alburgh. Much of this area is at the level of Lake Champlain and the soils are waterlogged or covered by water most of the year (USDA 1959). Carlisle muck is a black soil with some mineral soil mixed with well-decomposed organic matter. Balch peat is a brown, acidic soil that contains undecomposed organic matter. The Livingston soil is bluish-gray silty clay loam that in some places has a black, mucky surface layer that is 1 to 18 inches thick (USDA 1959).

Prime Farmland

There are no prime farmlands within the ROI for the Lake Champlain Segment of the proposed Project.

Seismicity

The 2014 U.S. Geological Survey (USGS) National Seismic Hazard Map for Vermont indicates that the Lake Champlain Segment has a 2 percent probability of exceeding a peak ground acceleration of 20 to 30 percent of the acceleration of gravity (g)[24] in 50 years (USGS 2014). This represents the potential for minor to moderate structural damage.

[24] the acceleration of gravity, g, is 9.8 (m/s^2), or the strength of the gravitational field (N/kg)

3.1.10 CULTURAL RESOURCES

3.1.10.1 Background on the Resource Area

The National Historic Preservation Act (NHPA) of 1966 (16 U.S.C. Part 470 et. seq.) is the primary federal law protecting cultural resources. Cultural resources include archaeological sites, historical structures and objects, and properties of traditional religious and cultural importance to a Native American tribe. Historic properties are cultural resources that are listed in or eligible for listing in the NRHP because they are significant and retain integrity (36 CFR 60.4). The NHPA addresses several types of historic properties, including prehistoric and historic archaeological sites, buildings and structures, districts, and objects (DOE 2014).

The NHPA Section 106 requires federal agencies to consider the potential effects of their proposed actions (undertakings) on historic properties and to develop measures to avoid, minimize, or mitigate any adverse effects. The DOE's compliance with NHPA Section 106 requirements is being coordinated with the development of this EIS; however, the EIS is not intended to substitute for a NHPA Section 106 agreement document according to 36 CFR 800.8(c).

In February 2015, the DOE formally initiated the NHPA Section 106 consultation process with the Advisory Council on Historic Preservation (ACHP), the VTSHPO, the Stockbridge-Munsee Band of Mohicans, and individuals with a demonstrated interest in the proposed undertaking (collectively the Consulting Parties) regarding the proposed NECPL Project. On February 6, 2015, the DOE distributed the following three cultural resource studies to the Consulting Parties with a letter requesting their feedback on both the proposed APE and the completed studies:

- *Phase I Archaeological Assessment in Support of the New England Clean Power Link Project -Lake Portion* (Lake Champlain Maritime Museum, November 2014)
- *Technical Report-Phase I Archaeological Reconnaissance Survey New England Clean Power Link Project – Overland Portion Windsor, Rutland, and Grand Isle Counties, Vermont* (Kristen Heitert, The Public Archaeology Laboratory, Inc., November 2014)
- *Technical Report-Historic Architectural Reconnaissance Survey, New England Clean Power Link Project-Overland Portion Grand Isle, Rutland, and Windsor Counties, Vermont* (Steve Olausen and Carolyn Barry, The Public Archaeology Laboratory, Inc., November 2014)

The DOE prepared a Draft Programmatic Agreement (PA) for review and comment by the VTSHPO and met with the USACE and VTSHPO on July 16, 2015 to discuss the APE. The PA identifies the Project APE and addresses effects of future construction, operation, and maintenance of the proposed Project on properties listed on or potentially eligible for NHRP listing. A Final PA has been developed. TDI-NE also developed an agreement with the VTSHPO regarding future studies and evaluation of additional laydown/staging areas. Additional information on the effects of the Project on cultural resources is discussed in ***Sections 5.1.10*** and ***5.2.10***.

3.1.10.2 Proposed NECPL Project

The proposed APE for the Lake Champlain Segment of the Project is 50 feet wide and 97.6 miles long. The total area of the APE is 588.5 acres (Sabick et al. 2014). The ROI for the Lake Champlain Segment is the same as the APE. The APE takes into account potential indirect effects on standing historic properties (i.e., buildings, structures, objects, and districts) from the use of heavy equipment, particularly along the terrestrial sections of the Project route. Construction activities (e.g., excavation activities and installation of cables) are expected to occur within a 20 to 50-foot wide corridor, or 10 to

25 feet on either side of the Project centerline. The APE might be further refined through additional engineering.[25]

Archeological and Terrestrial Area of Potential Effects

The DOE defines an APE as an area that includes geographic areas within the Project that may directly or indirectly alter the character or use of historic properties, if any such properties exist (36 CFR 800.16[d]). The APE includes all areas along the proposed transmission line construction corridor where ground-disturbing activities may be conducted. It also includes areas outside the proposed transmission corridor that may be affected by Project construction and operations, including the new Ludlow HVDC Converter Station, the Coolidge Substation Interconnection, laydown areas, access roads, and other locations.

Regional Prehistory

The prehistory of Lake Champlain is generally divided into the Paleoindian, Archaic, and Woodland periods. The Paleoindian Period began 11,300 years ago with the first human occupation of the region. Paleoindians, or Native American hunter-gatherer groups, moved into the Lake Champlain area about the time of the last ice age, as the Laurentian ice sheet retreated north (Sabick et. al 2014). Lake Champlain served as a source of food, water, tools, spiritual guidance, and transportation. These Native Americans lived in small campsites and villages along the shoreline and employed various techniques to extract the lake's resources.

Archaic populations (9000-2900 Before Present) in the Champlain Valley subsisted by hunting, gathering, and fishing using equipment crafted from a variety of stone, native copper, shell, antler, and bone implements. The large variety of woodworking tools present in archaic assemblages suggests that watercrafts were used for travel, fishing, and other animal procurement activities (LCMM 2014). Native Americans constructed and used various forms of boats, probably including dugout canoes, and possibly skin and bark canoes.

The Woodland Period (2,900-400 years Before Present) is considered the most complex prehistoric period in the Champlain Valley (LCMM 2014). By this time, Native Americans in the region had developed a culture based on selectively borrowing ideas and innovations from other people with whom they had come in contact over the preceding 9,000 years. The people of the Woodland Period established substantial settlements on the floodplains of major rivers, such as the Winooski and Otter Creek. The subsistence patterns of prehistoric Champlain Valley residents gradually changed from mobile hunting and fishing parties to horticulture and the gathering of a greater diversity and quantity of wild plant foods (LCMM 2014).

Regional History

The St. Lawrence Iroquois, the Mohawk Iroquois, the Mohican, and the Western Abenaki occupied the Champlain Valley by the early sixteenth century. In 1534, French explorer Jacques Cartier entered the Gulf of St. Lawrence looking for the Northwest Passage. During the next 2 years, Cartier attempted to develop trade relations with the St. Lawrence Iroquois and other tribes living along the banks of the St. Lawrence River. With the influx of Europeans to the area, disease, confusing political and economic relations, and continuous wars split the native communities apart and forced them to join outlying native groups (Sabick et.al 2014). Samuel de Champlain explored the region in 1609 and discovered a nearly complete water route from the St. Lawrence River to the Hudson River in New York. Both the French and Dutch had great interest in the Champlain Valley, were heavily involved in the fur trade, and depended on the Native Americans in the valley for furs.

[25] ROI may vary depending on lay down areas.

During the French and Indian War (1754 to1763), several naval battles were fought on Lake Champlain, as the British sought to dislodge the French from their forts at Ticonderoga, Crown Point, and Chimney Point (LCMM 2014). During the American Revolutionary War (1775 to 1783), naval battles took place on both Lake Champlain and the Hudson River, as British and American forces fought to control the waterways and access to Canada (LCMM 2014). In 1779, an American military garrison was established at West Point, near the present-day Village of Highland Falls. The War of 1812 brought further conflict to the Champlain Valley, as British and American forces again sought control of Lake Champlain. The defeat of the British Royal Navy in 1814 essentially ended the era of naval fleets on the lake and brought a sustained peace to the region (LCMM 2014).

The construction of the Champlain Canal between 1817 and 1823 provided a link between communities in the north and manufacturing centers along the Hudson River and the Atlantic seaboard. The canal underwent several realignments and improvements throughout the 1800s to accommodate increased traffic and larger vessels. The growth of the railroads decreased the significance of the canal system but brought new economic benefits to the region (LCMM 2014). The modern Barge Canal replaced the Champlain Canal in the early twentieth century. The Barge Canal was an attempt to revitalize the canal system; however, commercial canal traffic peaked in the 1890s and has since decreased steadily.

Lake Champlain became a tourist attraction after the Revolutionary War, but recreation became the primary use of the lake only after World War II (1941-1945). At that time the only commercial vessels that remained on the lake were car ferries and a small number of steel barges and diesel tugs (LCMM 2014). Concern for Lake Champlain's water quality and health increased as lakeshore property was purchased and developed for recreational use. Today, federal, state, and local ecological organizations monitor and study the lake's environment, and recreation remains a key use of Lake Champlain.

Examples of historic properties that would be expected within the setting of the proposed Project route or APE include the following:

- terrestrial archaeological sites (prehistoric or historic sites containing physical evidence of human activity but no standing structures);
- underwater sites, including shipwrecks and former terrestrial archaeological sites that are now submerged;
- architectural properties (buildings or other structures or groups of structures, or designed landscapes that are of historic or aesthetic significance);
- cemeteries;
- properties recognized by the Champlain Valley National Heritage Partnership; and
- sites of traditional, religious, or cultural significance to Native American tribes, including archaeological resources, sacred sites, structures, neighborhoods, prominent topographic features, habitats, plants, animals, and minerals that the tribes consider essential for the preservation of their traditional culture.

Cultural Resources Identified in the Lake Champlain Segment Area of Potential Effect

The Lake Champlain Maritime Museum conducted a Phase I Archaeological Assessment to determine the potential effect of the Project on existing archaeological sites within the APE (Sabick et.al 2014). Three known archaeological sites are located in the Project corridor: Rouses Point train trestle, Larrabees Point-Willow Point train trestle, and the Revolutionary War Great Bridge contain the remains of historic structures that once connected the two sides of the lake (***Table 3-6)*** (Sabick et. al 2014). The study identified three sonar targets within approximately 130 feet of the Project transmission line; however, they have not been evaluated. Twenty-three known sites are located within 1,640 feet of the Project transmission corridor, and 41 unverified sonar targets are located within approximately 985 feet

of the APE (Sabick et. al 2014). These 64 sites are well outside the APE and would not be affected by the Project.

TABLE 3-6 KNOWN CULTURAL RESOURCES IN THE APE FOR THE LAKE CHAMPLAIN SEGMENT

Site Type	Site Name and/or State and/or Project Number	Description
Terrestrial and underwater site	Rouses Point Train Trestle	Railroad connected Rouses Point with the town of Ogdensburg, NY
Underwater site	Larrabees Point-Willow Point Trestle (VT-AD-1344)	Remains of the Addison County Railroad crossing and two of the railroad draw boats
Underwater site	Great Bridge Caissons and Artifact Scatter (VT-AD-731 and VT-AD-711)	21 log-cabin style bridge footings (caissons) spanning entire width of Lake Champlain between Mount Independence and New York's Fort Ticonderoga

3.1.11 INFRASTRUCTURE

Infrastructure is defined as those human-made facilities and systems that are fundamental in serving the needs of a population in a specified area. The specific infrastructure components considered in this EIS include electrical power supply, water supply, stormwater drainage, communications systems, natural gas, liquid fuel supply, sanitary sewer and wastewater systems, and solid waste management.

The Lake Champlain Segment of the proposed NECPL Project would be located entirely in the state of Vermont, submerged under Lake Champlain for 97.6 miles. The effects of the proposed Project would be primarily localized within the transmission line corridor; therefore, the ROI for infrastructure is within 25 feet of the proposed transmission line centerline (***Table 3-1***).

3.1.11.1 Electrical Systems

The ISO-New England's *2014 Regional System Plan* identifies several challenges for maintaining system reliability for the 10-year planning horizon:

- improve resource performance and flexibility;
- maintain reliability and fuel certainty, given the region's increased reliance on natural-gas-fired capacity and the limited availability of fuels necessary to generate electrical energy;
- plan for the potential retirement of generators; and
- integrate a greater level of intermittent resources (i.e., variable energy resources [VERs]) (ISO-NE 2014).

Energy demand forecasts for ISO-New England anticipate a 10-year growth rate of 1.3 percent a year for the summer peak demand, 0.6 percent a year for the winter peak demand, and 1.0 percent a year for the annual use of electric energy. Although this demand growth rate is relatively slow, the *Regional System Plan* identifies that the region requires additional reliable capacity and fuel certainty. New England has become an "energy constrained system" due in part to a heavy dependence on natural-gas-fired generation and the planned retirement of more than 4,000-MW of resources from June 2014 through June 2017 (ISO-NE 2014). The NECPL Project would further the goals identified in the *Regional System Plan*.

Four power/telecommunication cable crossings are known to occur in the Lake Champlain Segment ROI. Power/telecommunication cable crossings are as follows: two power and/or telecommunication cable crossings at MP 2; one power and/or telecommunication cable crossing at MP 9; and, one power cable crossing at MP 90. Two ferry cable crossings are known to occur at MP 88 and one ferry cable crossing is known to occur at MP 93 (TRC 2015).

3.1.11.2 Water Supply Systems

More than 436 public water systems in Vermont serve more than 410,000 people (EWG 2011). As noted in ***Section 3.1.3.2***, approximately 35 percent of the Lake Champlain basin population (200,000 people) relies upon the lake for drinking water (LCBP 2014). The Lake Champlain Segment would be located in the vicinity of ten Vermont public water supply system raw water intakes, as well as, several private intakes. Additionally, the Project would pass through one SPA for the Water Supply Division of the VDEC (Grand Isle Consolidated Water District). The deep water intake for the Grand Isle Consolidated Water District would be located 100 feet from the Project. This intake also serves the Ed Weed Fish Culture Station (Perry 2014; TRC 2015).

3.1.11.3 Stormwater Management

The Lake Champlain Segment ROI is located within the Lake Champlain Drainage Basin. No substantial stormwater management infrastructure has been identified within Lake Champlain Segment ROI (VANR 2014b).

3.1.11.4 Communications

Three telecommunication lines were identified in Lake Champlain Segment ROI: two lines at MP 2 (each 40 feet long) and one line at MP 9 (40 feet long), although exact ownership has not been identified (TRC 2015). Vermont Telephone Company and AT&T may have lines between Grand Isle and Cumberland Head, and Burlington and Port Henry, respectively.

3.1.11.5 Natural Gas Supply

No natural gas pipelines or infrastructure have been identified in the Lake Champlain Segment ROI (NPMS 2012).

3.1.11.6 Liquid Fuel Supply

No pipelines or infrastructure for liquid fuel or other hazardous liquids have been identified in the Lake Champlain Segment ROI (NPMS 2012).

3.1.11.7 Sanitary Sewer and Wastewater Treatment

No sewer lines have been identified in the Lake Champlain Segment ROI (NPMS 2012).

3.1.11.8 Solid Waste Management

As of 2013, three permitted solid waste landfills were operating in Vermont with a total licensed capacity of 4.8 million tons. Two additional landfills have been permitted for operation; however, there are no current plans for construction. The New England Waste Services landfill in Coventry, Vermont (approximately 50 miles from the Lake Champlain Segment) accepts the largest amount of solid waste out of the permitted and operating landfills in Vermont and has a permitted fill rate of 450,000 tons per

year. The closest permitted and operating landfill to the Lake Champlain Segment is located in Bristol, Vermont, approximately 15 miles from the Lake Champlain Segment, and has a permitted fill rate of 1,000 tons per year (WM&PD 2015).

3.1.12 RECREATION

3.1.12.1 Background on the Resource Area

This section describes the recreation resources that occur in the Lake Champlain Segment. Recreation resources are areas and infrastructures designated by local, state, and federal planning entities to offer visitors and residents opportunities to enjoy leisure activities. Recreation resources include diverse opportunities that can range from quiet, undisturbed areas to highly developed recreation sites with permanent infrastructure. For the aquatic segment, recreation resources include recreational fishing and boating areas and water sport areas.

The ROI for recreation resources is the area 1 mile of either side of the centerline of the proposed transmission cables in the Lake Champlain Segment. This ROI distance includes the permanent ROW within which the proposed transmission line would be operated and maintained (approximately 12 feet wide) and the temporary work areas that may be affected during construction (i.e., construction corridors). The ROI area was selected to include any recreational activities on the lake that may be physically, visually, or acoustically affected by the Project activities. The ROI for land use is entirely within the state of Vermont.

3.1.12.2 Proposed NECPL Project

Recreation resources operating within a 1-mile wide corridor along the transmission line consist primarily of ferries operating on Lake Champlain. The LCTC and the Fort Ticonderoga Ferry Company both operate ferries running across the lake from Vermont to New York. The LCTC runs three ferry routes as described in ***Section 3.1.1.2***.

The Fort Ticonderoga Ferry Company operates the southernmost ferry route on Lake Champlain and provides year-round, daytime crossings between Shoreham, Vermont, in Addison County and Ticonderoga, New York. The operation of all three year-round ferry routes is contingent on the absence of icing and severe weather. These ferry routes all cross over the Project transmission line route.

Other recreation resources in the Lake Champlain Segment are bird watching, swimming, sightseeing, jet skiing, scuba diving (TDI-NE 2014b), recreational boating, boat tours and fishing (***Figure 3-3***). The VFWD has developed 34 access points on Lake Champlain for fishing;[26] additional access is available via more than 50 public boat launches[27] and via private marinas along the lake.[28] The National Marine Manufacturers Association reports that 29,259 recreational boats were registered in Vermont, and 172 "recreational boating industry businesses" were registered in Vermont in 2012; 25,742 (88 percent) of the registered boats were power boats.[29] These numbers represent all of the boats owned in Vermont, not just those that operate in Lake Champlain and provide a general reference for potential use of Lake Champlain because specific recreation use information is no publicly available.

[26] http://www.vtfishandwildlife.com/fish_accessareas.cfm. Accessed 11/21/2014
[27] http://www.lakechamplaincommittee.org/explore/access-points. Accessed 11/21/2014
[28] http://www.go-champlain.com/?page_id=67. Accessed 11/21/2014
[29] http://www.nmma.org/assets/cabinets/Cabinet508/Vermont_Boating_Economics.pdf. Accessed 11/21/2014

The VFWD also owns and operates the Korean War Veterans Fishing Access, which provides shore-bound anglers with opportunity to fish Lake Champlain via a universally accessible fishing platform. The Project would be located near the Fishing Access to facilitate entry into Lake Champlain.

3.1.13 PUBLIC HEALTH AND SAFETY

This section addresses the existing information regarding public health and safety for the construction, operation, and maintenance of the proposed NECPL Project; the discussion considers construction and operation personnel and the public. A safe environment is one in which there is no potential for death, serious bodily injury or illness, or property damage or in which those risks have been optimally reduced. Human health and safety encompasses workers' health and safety during construction, and public safety during construction and subsequently during operation of the newly constructed facilities.

3.1.13.1 Background on the Resource Area

The DOE reported the affected environment of a similar project proposed in New York in the CHPE FEIS (DOE 2014). The CHPE FEIS describes the public health and safety issues for the CHPE Project, which would be the same as those for the NECPL Project, except that it would occur in Vermont instead of in New York. The portions of the CHPE FEIS that describe the affected environment for public health and safety (Volume 2, pp 3-31 to 3-36 and pp 3-110 to 3-111) are incorporated here by reference.

This Page Intentionally Left Blank

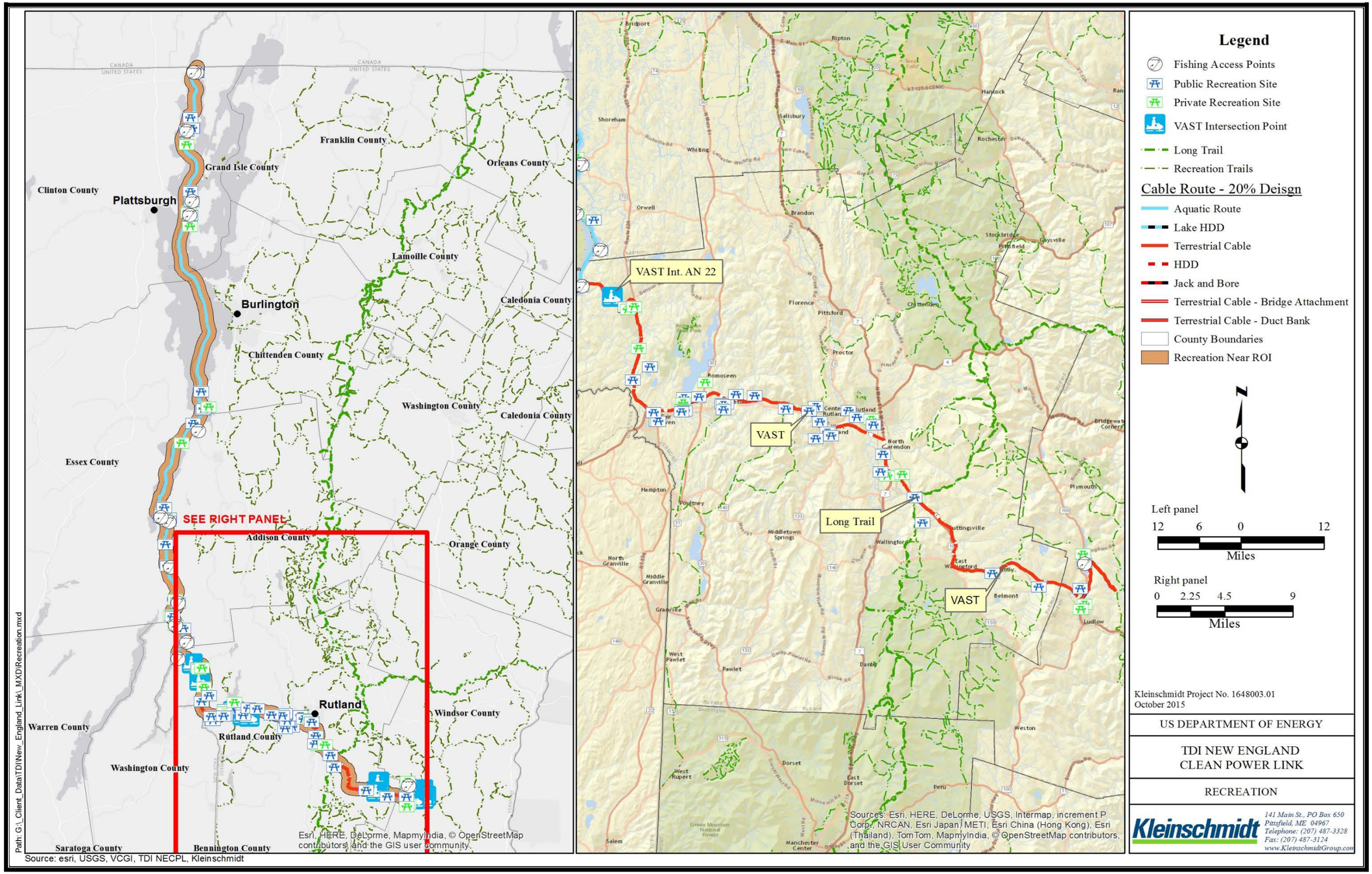

FIGURE 3-3. RECREATIONAL AREA AND ACTIVITIES

This Page Intentionally Left Blank

3.1.13.2 Proposed NECPL Project

The ROI for public health and safety in the Lake Champlain Segment is 25 feet on each side of the transmission line centerline. This ROI was selected because the primary public health and safety concern during construction activities is construction safety. This ROI represents the maximum area that is likely to be exposed to magnetic and electric fields associated with the transmission line along the proposed NECPL Project route.

Contractor Health and Safety

Maintaining a safe construction site requires adhering to regulations imposed for the benefit of construction workers. Complying with worksite safety regulations for on-water work reduces the likelihood of contractor injury. These regulations specify health and safety procedures and standards, the amount and type of training required for industrial workers, the use of personal protective equipment (PPE), administrative controls, engineering controls, and permissible exposure limits for workspace stressors. All contractors working on the NECPL Project would be responsible for following federal and state safety regulations, for administering workers compensation programs, and for working in a manner that poses no undue risk to personnel.

Industrial hygiene programs address exposure to hazardous materials, use of PPE, and availability of Material Safety Data Sheets (MSDSs). Contractors would be responsible for maintaining industrial hygiene during construction of the NECPL Project, reviewing potentially hazardous workplace operations, and monitoring exposure to workplace chemicals (e.g., asbestos, lead, hazardous materials), physical hazards (e.g., noise, falls), and biological agents (e.g., infectious waste, wildlife, poisonous plants). Contractors would recommend and evaluate controls (e.g., prevention, administrative, engineering) to ensure that personnel are properly protected or unexposed and would implement a medical surveillance program that provides occupational health physicals for workers subjected to any accidental chemical exposures.

Occupational hazards for the Lake Champlain Segment would include risks associated with aquatic construction activities and heavy equipment (i.e., cranes, winches, boats, and barges), equipment installation, heavy equipment transportation, contact with electrical lines, and potential to sever existing utility lines. The proposed NECPL Project would require specialized marine vessels designed solely for installing transmission cables; such vessels would be operated by properly trained personnel.

Public Health and Safety

The degree of hazard exposure depends on the location of the hazardous device relative to the population; therefore, threats to public safety and accident risks often can be identified, reduced, or eliminated before they become an issue. Hazardous activities include construction, operation and maintenance, and the creation of noisy environments. Effects on public health and safety may be minimized by routing a project through areas that members of the general public use infrequently; however, the Lake Champlain Segment would pass directly through a major recreational destination (***Figure 3-3)***. During construction, operation, and maintenance, activities would be clearly marked to avoid interactions with other vessels and recreational users on Lake Champlain.

Potential hazards along the aquatic portion of the transmission line include accidents related to cable installation and vessel accidents. The safety protocols that would ensure navigational safety during general construction activities include implementation and maintenance of safety clearance zones, issuance of notices to mariners through the USCG, and appropriate use of navigational aids (e.g., lights and fog horns/sounds) (MMS 2009).

Specialized vessels used during construction and maintenance activities represent navigational safety hazards; therefore, public health and safety organizations would regulate recreational activities for the safety and wellbeing of the public during construction and maintenance. The USCG at Station Burlington is the primary federal public health and safety organization with jurisdictional authority in the Lake Champlain Segment. The USCG at Station Burlington's area of responsibility includes all 125 miles of Lake Champlain, and USCG Station Burlington provides services year round, assisting approximately 1,000 boaters annually. Along with the USCG, the Vermont State Police, Marine Division, is responsible for ensuring the safety of members of the public engaging in recreational activities on waterways.

Electric and Magnetic Field Safety

Anything that carries an electric current produces EMFs. This EIS defines EMFs as electric and magnetic fields with an extremely low frequencies in the range of 3 to 3,000 hertz (Hz). Electric and magnetic fields are not coupled or interrelated in the extremely low frequency (ELF) range the same way that they are at higher frequency ranges. Therefore, in the ELF range it is more appropriate to refer to them as “electric and magnetic fields” rather than “electromagnetic fields. Electric and magnetic fields result from the flow of electrical current through wires or electrical devices and increase as the current increases. Shielded underground cables do not produce electric fields above ground but can produce a magnetic field (NIEHS 2002). Magnetic fields pass through most materials, are difficult to shield, and are the primary concern regarding potential health effects associated with EMFs from transmission lines (DOE 2012).

For electrical transmission lines, EMF levels decrease with increasing distance from the line. The EMF strength is inversely proportional to the square of the distance from the transmission line; however, when HVDC cables are close to each other, the opposing magnetic fields substantially cancel each other. Magnetic fields produced by DC sources are constant over time, but those produced by AC sources vary over time in both magnitude and polarity. Since DC magnetic fields are static, they do not induce currents in surrounding stationary objects or humans (NIEHS 2002; Vitatech 2012). The proposed NECPL cable would carry DC.

Electrical fields are measured in units of kilovolts per meter (kV/m), and magnetic fields are measured in unit of gauss (G). This EIS discusses magnetic field strength in units of milligauss (mG), or one thousandth of a G. Common household devices produce EMFs when they are connected to a source of electricity. Modern lifestyles rely upon a suite of electronic devices contributing to the baseline or natural background exposure to EMFs. ***Table 3-7*** lists the typical magnetic field levels at distances of 1 and 2 feet from common household appliances.

TABLE 3-7 MAGNETIC FIELD LEVELS OF VARIOUS HOUSEHOLD APPLIANCES

Appliance	Magnetic Field Strength (mG)	
	1 foot	2 feet
Hair Dryer	Bg - 70	Bg - 10
Window A/C	Bg - 20	Bg - 6
Color TV	Bg -20	Bg - 8
Dishwasher	6 - 30	2 - 7
Refrigerator	Bg - 20	Bg - 10
Can Opener	40 - 300	3 - 30
Microwave Oven	1 - 200	1 - 30
Washing Machine	1 - 30	Bg - 6
Power Drill	20 - 40	3 - 6

Source: NIEHS 2002
Bg = Measurement indistinguishable from background
mG = milligauss

The indistinguishable-from-background (Bg) measurements in ***Table 3-7*** refer to the background magnetic fields produced by the spinning of the Earth's core. The strength of this natural field varies from 470 to 590 mG over the United States (CHPEI 2012). Earth's magnetic field in the vicinity of Burlington, Vermont, is estimated at 53,606.8 nano-Tesla (nT)[30] or 536.068 mG (NOAA 2014).

No federal or Vermont standards limit residential or occupational exposure to DC or low-frequency (i.e. 60 Hz) magnetic or electric fields; however, the neighboring state of New York has adopted an interim standard magnetic field strength of 200 mG measured 3 feet above grade at the edge of the transmission line ROW. The purpose of New York's interim standard is to ensure that magnetic fields at the edges of future major electric transmission ROWs are no stronger than the fields of existing 345-kV lines operating throughout the state. This interim standard is a guideline that would avoid unnecessary increases in existing levels of exposure to magnetic fields; it is not intended to imply either safe or unsafe levels of exposure.

3.1.14 NOISE

3.1.14.1 Background on the Resource Area

This section describes the existing sound landscape in the vicinity of the Lake Champlain Segment of the proposed NECPL Project route. Sound is defined as tiny fluctuations in air pressure characterized by both its amplitude (how loud it is) and frequency (or pitch); noise is defined as unwanted sound.

A logarithmic scale, known as the decibel (dB) scale, is used to quantify sound intensity and to compress the scale to a more manageable range. The A-weighted decibel (dBA) is used to reflect this selective sensitivity in human hearing. The human range of hearing extends from approximately 3 dBA to 140 dBA.

Table 3-8 shows a range of typical noise levels from common noise sources.

[30] nano-Tesla = 10^{-9} Tesla*;* a unit of measurement of magnetic field strength

TABLE 3-8 NOISE LEVELS FROM COMMON SOURCES

Sound Pressure Level (dBA)	Typical Sources
120	Jet aircraft takeoff at 100 feet
110	Same aircraft at 400 feet
90	Motorcycle at 25 feet Gas lawn mower at 3 feet
80	Garbage disposal
70	City street corner
60	Conversational speech
50	Typical office
40	Living room (without TV)
30	Quiet bedroom at night

Source: Rau and Wooten 1980

Environmental noise is often expressed as a continuous sound occurring over a period of time, typically 1 hour. The average sound level is called the equivalent continuous noise level (Leq) and is variable. This metric is used as a baseline by which to compare project-related noise levels (i.e., noise modeling results, which are also expressed as an hourly Leq) and to assess the potential project-related noise increase over existing (or ambient) conditions.

Statewide Noise Limits

Vermont has no statutes that set quantitative noise standards across the state; however, the Vermont Public Service Board is reviewing an approach to regulating noise from transmission facilities. These regulations are likely to follow guidelines from the World Health Organization (WHO) (Kaliski 2014). The WHO's nighttime noise guideline for European transmission facilities is 40 dBA.

The ROI for noise is primarily the Project construction corridor. The ROI extends 600 feet on either side of the transmission line route centerline. Though the state of Vermont does not have a non-industrial noise standard, this ROI was determined to be appropriate because it is the same ROI that was applied in the CHPE FEIS, which analyzes a similar project on the New York side of Lake Champlain. The same technology used for CHPE project construction would be used for this Project. The 600-foot ROI applied in the CHPE FEIS was selected because beyond this distance the noise generated by proposed construction activities would be below 65 dBA, which is the maximum noise level permitted by any new noise source in a non-industrial setting as determined by NYSDEC guidance (NYSDEC 2001).

3.1.14.2 Proposed NECPL Project

The Lake Champlain Segment of the transmission cables would be installed entirely in the open water areas of Lake Champlain. On the water, sound is generated by natural sources (wind and waves) and by man-made sources (boat and barge traffic). On shore, existing sound sources at noise-sensitive receptors include transportation noise (railroad or roadway noise) and machinery noise (e.g., building climate and ventilation equipment, local industrial operations equipment).

Noise-sensitive receptors in the Lake Champlain Segment ROI include recreational boaters and areas of the lake in which a quiet recreational setting is desired. No other known noise-sensitive receptors exist in the Lake Champlain Segment.

3.1.15 HAZARDOUS MATERIALS AND WASTES

3.1.15.1 Background on the Resource Area

This section considers the storage, transportation, handling, and use of hazardous materials; the generation, storage, transportation, and disposal of hazardous wastes; and the presence of special hazards in the Lake Champlain Segment of the Project area.

Hazardous materials and hazardous wastes are defined by 49 CFR 171.8 and 42 U.S.C. Part 6903, respectively. Examples of hazardous materials may include liquid fuels, solvents, oils, lubricants, and hydraulic fluids. Examples of hazardous wastes may include spent hazardous materials and by-products from their use. Special hazards are regulated under 15 U.S.C. Chapter 53 and include asbestos-containing material, PCBs, and lead-based paint.

The VDEC, as authorized by the EPA, is the agency responsible for hazardous waste regulatory programs in Vermont. Under this authorization process, the VDEC issues permits, conducts inspections, signs consent orders, gathers and processes data, compels corrective actions including assessing fines, and approves various manifests and management plans on behalf of the EPA. Vermont's hazardous waste management regulations are defined by 3 V.S.A. § 2853(5) and 10 V.S.A. Chapter 159.

The hazardous materials and wastes for the Lake Champlain Segment ROI of the Project is the area within the construction corridor, construction staging areas, and the route that construction vessels would use to access the line. ***Table 2-1*** depicts the ROI for the Overland and Lake Champlain segments of the Project. The ROI was selected because it encompasses the geographic area that would reasonably be affected by the Project during construction, operations, maintenance, and emergency repair activities, either when hazardous materials were used and generated, or when existing contaminants were encountered.

3.1.15.2 Proposed NECPL Project

Portions of the sediments of Lake Champlain contain various contaminants such as mercury, PAHs, PCBs, arsenic, lead, nickel, zinc, chromium, copper, and silver. More information regarding the presence of contaminated sediments is in ***Section 3.1.9*** (Geology and Soils).

The installation of the aquatic transmission cables in Lake Champlain would require the transport, handling, use, and on-site storage (i.e., on boats and at construction staging areas) of hazardous materials and petroleum products such as gasoline, diesel, oils, hydraulic fluids, and cleaners. Most of these products would be used in the operation of the vessels, barges, cranes, and other trenching equipment needed to install the aquatic transmission cables. Small amounts of hazardous wastes, primarily used oils, solvents, and lubricants, would be generated as by-products of the process of installing the aquatic transmission line (TDI-NE 2014d).

3.1.16 AIR QUALITY

3.1.16.1 Background on the Resource Area

This section addresses the potential effects of the proposed NECPL Project on local and regional air quality and climate change. In accordance with federal CAA requirements, the air quality of a region or area is determined by the concentration of criteria air pollutants in the atmosphere. Several factors affect the air quality of a particular region, including the sources of pollutants in the area, the quantity of sources, topography, climate, and the prevailing meteorological conditions.

Ambient Air Quality Standards
The CAA requires the EPA to establish national ambient air quality standards (NAAQS) for common air pollutants to protect human health, welfare, and the environment. These pollutants are called criteria pollutants. The EPA set NAAQS for six criteria pollutants:

1. ground-level ozone (O_3)
2. carbon monoxide (CO)
3. nitrogen dioxide (NO_2)
4. sulfur dioxide (SO_2)
5. lead (Pb)
6. particulate matter (PM)

Particulate matter is a mixture of small particles and liquid droplets and is separated into two class sizes: PM_{10} and $PM_{2.5}$. Coarse particles (PM_{10}) are less than 10 microns[31] but greater than 2.5 microns. Fine particles ($PM_{2.5}$) are less than 2.5 microns. Criteria pollutants are further classified into primary and secondary pollutants. Primary pollutants (e.g., CO, NO_2, SO_2, Pb, PM) are emitted directly to the atmosphere from a source, whereas secondary pollutants (e.g., O_3, PM) are produced in the atmosphere from precursor pollutants (e.g., nitrogen oxides (NO_x) and volatile organic compounds (VOCs). A series of reactions in the atmosphere involving NO_x, VOCs, and sunlight produce secondary pollutants, including O_3 and PM; emissions of NO_x and VOCs must be controlled to reduce the concentrations of PM in the air and ground-level concentrations of O_3. The PM can be a primary or a secondary pollutant. In addition, the CAA identifies two types of NAAQS: (1) primary standards designed to protect public health, and (2) secondary standards that protect public welfare, including visibility and damage to plants, animals, and structures. The EPA is required to regulate emissions of hazardous air pollutants (HAPs) from specific categories of sources; HAPs cause serious health effects, such as cancer, or adverse environmental effects. Currently, 187 HAPs are regulated by using control technology to reduce emissions. One major category of HAPs is VOCs.

The CAA provides states the authority to establish air quality rules and standards that are stricter than the federal standards. The Vermont Air Quality and Climate Division (AQCD) of the VDEC has the authority to implement the CAA and maintain compliance with the NAAQS. Vermont adopted all of the federal ambient air quality standards and also adopted a standard for sulfate (***Table 3-9***) (VDEC 2014a, b).

Attainment versus Nonattainment and General Conformity
EPA designates each of the criteria pollutants within an air quality control region (AQCR) as being in attainment (pollutant meets or is better than the standard), in nonattainment (pollutant does not meet the standard), in maintenance (region was previously in nonattainment but is now in attainment), or unclassifiable (data are insufficient to determine status, so the region is considered to be in attainment). The CAA requires each state to develop a State Implementation Plan (SIP) describing how the state

[31] A unit of length equal to one millionth of a meter

would implement, enforce, and maintain compliance with all NAAQS and how the state would attain the standards in each region designated as nonattainment. The SIPs are intended to prevent the deterioration of air quality in regions that are in attainment and to reduce emissions of criteria pollutants in nonattainment areas to levels that would achieve compliance with all NAAQS.

The densely populated northeast region extending from Maine to Northern Virginia was grouped into the Ozone Transport Region (OTR). Regardless of the attainment status of an area in the OTR, all states in the OTR are required to implement additional emission control measures for the pollutants that produce ozone. More specifically, SIPs in OTR states must use reasonably available control technology (RACT) and reasonably available control measures (RACM) to control emissions of VOCs. Furthermore, states must comply with permitting programs, such as new-source review and prevention of significant deterioration.

The General Conformity Rule (CAA Section 176(c)(4)) requires that any federal action in nonattainment or maintenance areas must not cause or contribute to new or existing violations of the NAAQS by ensuring that the actions conform to the state NAAQS and SIPs. Furthermore, the rule ensures that federal actions do not delay attainment of any NAAQS or interfere with reaching any milestone in progress toward achieving compliance with the NAAQS.

TABLE 3-9 AMBIENT AIR QUALITY

Pollutant	Average Period	Federal Air Quality Standards[a]				Vermont State Standards[b]	
		Primary Standards		Secondary Standards			
		Level[c]	Form	Level	Form	Level	Form
Carbon Monoxide	8-hour	9 ppmv	Not to be exceeded more than once per year	None		Same as federal standard	
	1-hour	35 ppmv					
Lead	Rolling 3 month average	0.15 µg/m^3	Maximum over a 3 year period	Same as primary			
Nitrogen Dioxide	1-hour	100 ppbv	98th percentile of the daily maximum averaged over 3 years	None			
	Annual	53 ppbv	Mean	Same as primary			
Ozone	8-hour	75 ppbv	Annual 4th highest daily maximum averaged over 3 years	Same as primary			
$PM_{2.5}$	24-hour	35 µg/m^3	98th percentile averaged over 3 years	Same as primary			
	Annual	12 µg/m^3	Annual mean averaged over 3 years	15 µg/m^3	Annual mean averaged over 3 years		
PM_{10}	24-hour	150 µg/m^3	Not to be exceeded more than once per year	Same as primary			
Sulfur Dioxide	1-hour	75 ppbv	99th percentile of daily maximum concentration averaged over 3 years	None			
	3-hour	None		0.5 ppmv	Not to be exceeded more than once per year		
Sulfates	24-hour	None		None		2 µg/m^3	Maximum
	Summer (April to September)					2 µg/m^3	Arithmetic mean

[a]40 CFR part 50
[b]VDEC 2014a, b
[c]ppmv = parts per million by volume; ppbv = parts per billion by volume; µg/m^3 = micrograms per cubic meter of air

Climate Patterns

The climate of Vermont is diverse and exhibits considerable temporal and spatial variation in temperature and precipitation. Vermont experiences large daily and annual temperature ranges and large differences in temperature and precipitation between the same seasons in different years. The predominant air flow pattern in Vermont is from the west with a northwesterly component in the winter that becomes more southwesterly in the summer. Most air masses affecting Vermont can be

characterized as (1) cold, dry air from Canada; (2) warm, moist air traveling north-northeastward from subtropical waters; and (3) cool, damp air from the north Atlantic Ocean (NCDC 2008).

Vermont is classified into three climatological divisions based on differences in elevation, terrain, and distance from Lake Champlain and the Atlantic Ocean: (1) Northeastern, (2) Western, and (3) Southeastern. The Project lies primarily in the Western division, which is the area least affected by the Atlantic Ocean and most moderated by Lake Champlain (NCDC 2008). The annual mean temperature among the three climate divisions ranges from 43°F to 46°F (NCDC 2008). The average temperature in July ranges from 66°F to 69°F, and the average winter temperature ranges from 15°F to 19°F. Summer temperatures are fairly uniform across the state and have a larger diurnal range than winter temperatures. Precipitation is well distributed throughout the year. In general precipitation is greatest in the summer, particularly in the Northeastern and Western divisions. Annual average precipitation ranges from 38 to 45 inches among the three divisions (NCDC 2008). Typical annual snowfall totals range from 55 to 65 inches.

Pollutants

Several anthropogenic and natural sources in the Project area emit air pollutants. The major sources of CO and NO_2 include on-road and off-road mobile sources, residential and commercial combustion of fossil fuels, wildfires, biogenic sources, and waste disposal (EPA 2011). The dominant sources of SO_2 emissions in Vermont are fossil-fuel combustion, industrial processes, fire, and mobile sources. The major sources of PM are fossil-fuel combustion, dust from roads and construction, mobile sources, waste disposal, agriculture, and industrial processes. Mobile sources and fuel combustion are the primary sources of lead in Vermont (EPA 2011). Numerous sources emit VOCs, including vegetation, soil, mobile sources, residential fossil-fuel combustion, agriculture, commercial, and industrial use of solvents, industrial processes, electricity generation, and waste disposal. Pollutants affecting the air quality of Vermont often are emitted in upwind source regions (e.g., Mid-Atlantic and Midwestern states) and are transported to Vermont by the prevailing westerly winds; consequently, air quality in the state reflects emissions on local to continental scales. Nitrogen oxides and VOCs are known as precursor compounds.

Greenhouse Gas Emissions

Greenhouse gases (GHGs) trap heat in the atmosphere and are produced by both anthropogenic sources (i.e., fossil-fuel combustion, transportation, industry) and biological processes. The major GHGs include carbon dioxide (CO_2), methane (CH_4), nitrous oxide (N_2O), water vapor, and fluorinated compounds. In 2011, Vermont's GHG emissions were approximately 8.1 million metric tons (CO_2 equivalent), which represents a return to 1990 levels. The major GHG sources in Vermont are transportation (46 percent), residential and commercial fuel use (24 percent), agriculture (10 percent), industrial fuel use (7 percent), and electricity (5 percent) (VDEC 2013). Emissions of GHGs from residential, commercial, and industrial fuel combustion and from transportation decreased or remained constant from 2009 to 2011. In contrast, GHG emissions from electricity consumption increased slowly over that period (VDEC 2013).

3.1.16.2 Proposed NECPL Project

The ROI for air quality for the Lake Champlain Segment includes Grand Isle, Chittenden, Addison, and Rutland counties in Vermont. These counties are along the Project route and represent the areas most likely to be affected by emissions associated with construction of the Project. These counties are part of the EPA-designated Champlain Valley Interstate AQCR. ***Table 3-10*** lists the most recently published emission inventory for each county in the ROI and the entire Champlain Valley Interstate AQCR. All counties in the ROI are in attainment for all NAAQS.

TABLE 3-10 2011 LAKE CHAMPLAIN SEGMENT AIR EMISSIONS INVENTORY

Counties and AQCRs	CO	NO_x	SO_2	VOC	$PM_{2.5}$	PM_{10}
Addison	9,792	1,275	426	6,330	967	3,294
Chittenden	28,512	4,400	671	7,193	1,522	4,520
Grand Isle	6,169	363	24	3,083	262	762
Rutland	13,903	1,626	308	9,140	981	3,598
Champlain Valley AQCR	**236,158**	**30,347**	**9,752**	**145,387**	**13,254**	**40,914**

CO=Carbon Dioxide; $NO_{x=}$: nitrogen oxides; SO_2 sulfur dioxide; $PM_{2.5=}$Fine Particulate Matter; $PM_{10.=}$Coarse particulate matter; VOC= volatile organic compounds ;AQCR=air quality control region

Source: EPA 2011
Note: All emissions are in tons per year

3.1.17 SOCIOECONOMICS

3.1.17.1 Background on the Resource Area

Socioeconomics is defined as the basic attributes and resources associated with the human environment, particularly characteristics of population and economic activity. Regional birth and death rates, and people moving in and out of the area affect population levels. Economic activity typically encompasses employment, personal income, and industrial or commercial growth. Changes in these population and economic indicators are typically accompanied by changes in other components, such as housing availability and the demand for public services.

3.1.17.2 Proposed NECPL Project

The residency distribution of employees, commuting distances and times, and the locations of businesses that provide goods and services to employees and their dependents are important criteria in evaluating effects on socioeconomic resources. Other criteria may include regional economic activity, population, housing, and schools. The ROI of the aquatic portion of the Project is defined as the Vermont counties directly adjacent to the aquatic route: Grand Isle, Chittenden, Addison, and Rutland counties (***Figure 2-2***). This ROI encompasses the locations of construction activities; and would be the primary source of goods, services, and workers used for the Project as well as the primary recipient of economic benefits. Although workers may be hired from areas outside of this zone, most of the socioeconomic impacts of those workers' activities (living in short-term housing, spending money) would be within the ROI. Therefore, any socioeconomic effect of hiring from outside Vermont is expected to be negligible because the Vermont job market is capable of providing sufficient workers; therefore, this EIS does not further analyze possible out-of-state sources of workers. Data and analyses pertaining to schools and community services within the ROI are excluded from the socioeconomic analysis because no noticeable population changes that may affect schools and community services (e.g., police and fire) are expected to result from implementing the Project.

Population
The counties in the Lake Champlain Segment vary in size. Populations in 2013 ranged from 6,984 people in Grand Isle County to 157,637 people in Chittenden County. Growth trends range as well, from a population loss over the last 13 years of approximately 3.4 percent for Rutland County to a population gain of 7.5 percent for Chittenden County. Local and regional population trends are provided in ***Table 3-11.***

TABLE 3-11 POPULATION SUMMARY FOR THE LAKE CHAMPLAIN SEGMENT

Location	2000	2013	2000 to 2013	
			Population Change	Percent Change
United States	281,421,906	311,536,594	30,114,688	10.7
State of Vermont	609,618	625,904	17,077	2.8
Grand Isle County	6,901	6,984	83	1.2
Chittenden County	146,571	157,637	11,066	7.5
Addison County	35,974	36,811	837	2.3
Rutland County	63,400	61,270	-2,130	- 3.4

Source: EPS-HDT 2014

Employment

The largest industry by percentage of workforce employed is management, professional, and related industries, representing between 34 and 46 percent of all employment across the four counties in the Lake Champlain Segment ROI. This mirrors state and federal statistics. Sales and office employment is the next largest employment sector, employing between roughly 17 and 28 percent of the workers in the four counties. Between 16 and 19 percent of employed citizens of Grand Isle, Chittenden, Addison, and Rutland counties work in the service sector. The construction and transportation industries contribute an average of 8.7, and 10.8 percent, respectively, of the employment in these areas. Farming and related work contribute less than 2 percent; Addison County has the largest percentage of workers employed in farming. ***Table 3-12*** provides employment data for the ROI for the Lake Champlain Segment.

TABLE 3-12 OVERVIEW OF 2012 EMPLOYMENT BY INDUSTRY FOR LAKE CHAMPLAIN SEGMENT*

Industry	United States	State of Vermont	Grand Isle County	Chittenden County	Addison County	Rutland County
Civilian Employed Population > 16 years	**141,864,697**	**324,350**	**3,727**	**86,895**	**19,166**	**30,233**
Management, professional, and related industries	36.2%	39.9%	35.0%	46.3%	41.0%	34.4%
Service	18.1%	17.6%	16.2%	17.3%	17.3%	19.3%
Sales and office	24.6%	22.0%	27.5%	22.5%	16.6%	22.6%
Farming, fishing, and forestry	0.7%	1.3%	¨0.9%	0.5%	3.2%	1.0%
Construction, extraction, maintenance, and repair	8.3%	8.9%	8.9%	6.1%	10.5%	9.3%
Production, transportation, and material moving	12.0%	10.4%	11.4%	7.3%	11.4%	13.4%

*The Census Bureau's American Community Service Office calculated these percentages using data from surveys conducted annually from 2008 through 2012; they represent averages during that period.
> more than

Source: EPS-HDT 2014

In 2013, unemployment across the ROI for the Lake Champlain Segment was lower than the federal average. The federal average was 7.4 percent, while annual unemployment in the four counties ranged from 3.5 percent in Chittenden County to 5.1 percent in Rutland County (USDC 2014). The unemployment rates for these counties were similar to the statewide unemployment rate of 4.4 percent ***Table 3-13***.

TABLE 3-13 2013 UNEMPLOYMENT FOR LAKE CHAMPLAIN SEGMENT

Annual Unemployment	
United States	7.4%
State of Vermont	4.4%
Grand Isle County	4.8%
Chittenden County	3.5%
Addison County	4.1%
Rutland County	5.1%

Source: USDC 2014

Housing

An analysis of available rental housing was conducted because a small number of specialized workers may come from areas outside of the community or county where work is to take place, and workers may need to live in short-term housing. In the ROI for the Lake Champlain Segment short-term housing vacancies consist mainly of housing for seasonal, occasional, or recreational use and rental vacancies. Vacancy varies significantly, ranging from a low of 5 percent in Chittenden County, where colleges (i.e., University of Vermont, Champlain College, Saint Michael's College) influence housing pressure, to a high of 38 percent in Grand Isle County. Housing vacancy is 22 percent in Rutland County and 15 percent in Addison County (EPS-HDT 2014).

3.1.18 ENVIRONMENTAL JUSTICE

3.1.18.1 Background

Executive Order 12898, *Federal Actions to Address Environmental Justice in Minority Populations and Low-Income Populations*, requires federal agencies to identify and address any disproportionately high and adverse human health or environmental effects of their projects on minority or low-income populations. Each federal agency must conduct its programs, policies, and activities that substantially affect human health or the environment in a manner that ensures that such programs, policies, and activities do not have the effect of excluding persons or populations from participation in, denying persons or populations the benefits of, or subjecting persons or populations to discrimination under, such programs, policies, and activities because of their race, color, national origin, or income level. Minority populations are those identified in census data as Native American or Alaskan Native; Asian or Pacific Islander; Black, not of Hispanic origin; or Hispanic (CEQ 1997). Low-income populations are individuals and families that are living at or below the United States poverty level.

The ROI of the aquatic portion of the Project is defined as the Vermont counties directly adjacent to the aquatic route, including Grand Isle, Chittenden, Addison, and Rutland counties. The ROI for analyzing potential impacts on minority and low-income communities is based on census data in the counties that the proposed NECPL Project transmission line would pass through. To address potential effects on communities along the ROI, demographic information was compiled using the Economic

Profile System-Human Dimensions Toolkit (EPS-HDT) to produce socioeconomic reports for Addison, Chittenden, Grand Isle, Rutland and Windsor counties (EPS-HDT 2014).

The information from the EPS-HDT identifies whether minorities, and low income communities are located in the ROI. An analysis of environmental justice sets the stage for determining whether the proposed action or action alternatives would pose disproportionate risks to the environment, health, minorities, or low-income people or families.

Executive Order 13045, *Protection of Children from Environmental Health Risks and Safety Risks*, states that each Federal agency "(a) shall make it a high priority to identify and assess environmental health risks and safety risks that may disproportionately affect children; and (b) shall ensure that its policies, programs, activities, and standards address disproportionate risks to children that result from environmental health risks or safety risks." Children (youths) are defined as populations 16 years of age or younger. The proposed NECPL Project would not result in potentially disproportionate effects on children; therefore, it is not discussed further in the EIS.

3.1.18.2 Proposed NECPL Project

Analysis in this EIS compares minority and low-income population data for the counties in the ROI with population data for the state of Vermont (***Table 3-14***). ***Figure 2-2*** shows the counties through which each segment of the Project ROI would pass.

The proposed transmission cable passes through Lake Champlain; therefore, analysis is based on county and state census data on minority and low-income populations that border the Lake Champlain Segment. Four counties border the Lake Champlain Segment ROI in Vermont. In 2013, minority populations within those counties were predominantly Asian (2 percent), Hispanic or Latino (1.7 percent), and Black (1.4 percent). Within these counties, among census tracts closest to the lake's edge, the largest minority population is in census tract 33.04 in Chittenden County (4.6 percent Black).

TABLE 3-14 DEMOGRAPHIC MAKEUP OF GRAND ISLE, CHITTENDEN, ADDISON, AND RUTLAND COUNTIES COMPARED TO VERMONT

Demographics	Counties				State
	Grand Isle	Chittenden	Addison	Rutland	Vermont
Total Population	6,984	157,637	36,811	61,270	625,904
White alone	6,591	143,191	34,592	58,961	588,820
Hispanic or Latino	93	3,043	701	738	9,803
Black or African American alone	22	3,072	303	295	5,964
American Indian alone	46	325	91	128	1,693
Asian alone	20	4,442	605	358	7,835
Native Hawaiian & Other Pacific Island alone	0	8	31	0	108
Some other race alone	0	274	12	13	508
Two or more races	212	3,282	476	777	11,173

Source: EPS-HDT 2014

In 2013, the minority populations in Chittenden County were the largest in Vermont. Chittenden County is the most populous county in the state, with more than twice as many residents as Vermont's second-most populous county, Rutland. Chittenden County is part of the Burlington-South Burlington, Vermont Metropolitan Statistical Area (USCB 2014). Asian, Hispanic or Latino, and Black minority populations are largest in Chittenden County but make up only 2.8 percent, 1.9 percent, and 1.9 percent, respectively, of the total population of the county.

The 2013 median household income of families in the counties bordering Lake Champlain ranged from $49,271 to $63,989. Low-income populations in the counties throughout the Lake Champlain Segment ROI are shown in ***Table 3-15*** Chittenden County accounted for the highest median household income at $63,989, which was higher than the median income for the entire state of Vermont. Chittenden County had the largest number of individuals and families living in poverty compared to the other three counties, which translates to 6.1 percent of the state of Vermont's individuals and families living in poverty ***(Table 3-15)***. Within these counties, among census tracts closest to the lake's edge, the largest low-income population is 13.6 percent in census tract 9623 in Rutland County.

TABLE 3-15 2013 POVERTY LEVEL IN THE LAKE CHAMPLAIN SEGMENT COMPARED TO VERMONT

Poverty Levels	Counties				State
	Grand Isle	Chittenden	Addison	Rutland	Vermont
People Below Poverty	481	16,672	3,875	7,655	70,873
Families Below Poverty	114	2,309	803	1,349	12,205

Source: EPS-HDT 2014

TABLE 3-16 2013 PERCENT OF LOW-INCOME POPULATION IN THE LAKE CHAMPLAIN SEGMENT COMPARED TO VERMONT

Percent of Population Below Poverty Level	Counties				State
	Grand Isle	Chittenden	Addison	Rutland	Vermont
People Below Poverty	6.9%	11.2%	11.3%	13.0%	11.8%
Families Below Poverty	5.3%	6.1%	8.45	8.3%	7.6%

Taxes and Revenue

Property taxes in the State of Vermont are determined locally by municipally-determined assessments on homesteads. Local officials determine the appraisal values of properties and the legislative body of the municipality sets the tax rate.[32] Thus, property tax revenues across the counties in the Lake Champlain Segment vary by town.

[32] http://www.state.vt.us/tax/pvr.shtml

3.2 OVERLAND SEGMENT

3.2.1 LAND USE

3.2.1.1 Background on the Resource Area

This section describes existing land uses in the vicinity of the Overland Segment of the Project route, and land use plans and policies applicable to the Overland Segment. General land use categories along the Project route are classified based on data from the VCGI and Project photographs.

3.2.1.2 Proposed NECPL Project

The ROI for land use for the Overland Segment is the area within 50 feet of either side of the centerline of the transmission line. This area is defined as the ROI because it includes the roadway and railway ROWs within which the transmission line would be operated and maintained and the temporary work areas that would be affected during construction (i.e., construction corridors). The transmission line would be installed in road and railroad ROWs over the length of the Overland Segment. Deviation areas include stream and river crossings and one lake crossing under Lake Bomoseen. The cables typically are proposed to be located within the unpaved section of a given ROW but in some cases may be installed under the paved shoulder. The Overland Segment would traverse Rutland and Windsor counties in areas ranging from rural (Benson) to suburban (outskirts of Rutland). Land use within the Overland Segment ROI is primarily transportation because it is associated with roads.

The Overland Segment of the Project is 56 miles long; the proposed transmission line is to be buried along road and other ROWs (refer to ***Appendix C*** for a depiction of the Overland Segment). At the northern end of the segment, the line would exit the Lake Champlain Segment in Benson, Vermont, across TDI-NE controlled property, and follow Benson town roads for 4.3 miles east to Vermont Route 22A. It would then travel along Vermont Route 22A south in the road ROW for 8.2 miles. In Fair Haven, the transmission route would turn east and follow U.S. Route 4 for 17.4 miles until just south of the city of Rutland to Route 7. In Rutland, the transmission route would follow U.S. Route 7 south 2.7 miles to Vermont Route 103 to North Clarendon, where it would turn south again. The transmission route would follow Vermont Route 103 south for 3.8 miles to the Green Mountain Railroad Corporation railroad ROW in Shrewsbury. The route would go south on the railroad ROW to Route 103 in Wallingford for 3.5 miles then continues on Route 103 south/southeast to Route 100 in Ludlow for 10.6 miles. The transmission cable would then follow Vermont Route 100 north for 0.8 mile and then follow Ludlow town roads and a short section of TDI-NE-controlled property for 4.5 miles to the proposed new HVDC converter station. The route follows town roads for an additional 0.6 miles and ends at the existing VELCO Coolidge substation, located in Cavendish, Vermont.

Table 3-17 shows the land cover/habitat types in the Overland Segment. Land uses in the ROI include transportation (the road corridor and rail corridor), farm and forest land, light commercial use, and residential uses. The land uses adjacent to the beginning of the corridor in Benson are primarily agricultural fields and forests. These land uses continue down the road corridor, with common land use types being forested land mixed with open/pasture lands. Along the U.S. Route 7 section of the ROI, land uses are scattered commercial/industrial. The Rutland Southern Vermont Regional Airport is located near this segment, south of Vermont Route 103 as it branches off U.S. Route 7. Scattered residential use also occurs in this segment, particularly along Vermont Route 103 through the towns of Shrewsbury and Mount Holly. There are some residences, schools, churches, and libraries in this portion of the route. Light commercial use is mixed with residential uses in this area. Land uses near the end of the corridor in Ludlow include a mix of commercial, field, forest, and residential uses. ***Appendix C*** includes a map of the land uses along the overland route.

TABLE 3-17. HABITATS AND LAND COVER TYPES OCCURRING IN THE ROI OF THE OVERLAND SEGMENT

Habitat/Land Cover Type	Acreage of ROI	Percent of ROI
Brush or Transitional Between Open and Forested	1	0.1
Broadleaf Forest	199	14.6
Coniferous Forest	44	3.3
Mixed Coniferous-Broadleaf Forest	43	3.2
Forested Wetland	5	0.4
Non-Forested Wetland	8	0.6
Brush or Transitional Between Open and Forested	1	0.1
Row Crops	154	11.3
Hay/Rotation/Permanent Pasture	107	7.8
Other Agricultural Land	3	0.2
Residential	37	2.7
Commercial, Services, and Institutional	4	0.3
Transportation, Communication and Utilities	714	52.4
Outdoor and Other Urban and Built-up Land	1	0.01
Water	41	3.0

Source: VCGI 2014

Land Use Plans and Policies

Municipal Land Use Plans and Policies

In the Overland Segment, the transmission line would pass through twelve Vermont municipalities: Benson, West Haven, Fair Haven, Castleton, Ira, West Rutland, Rutland, Clarendon, Shrewsbury, Wallingford, Mount Holly, and Ludlow. The town plans for these municipalities were reviewed for relevance to the proposed NECPL Project. No municipal compliance issues were discovered.

Act 200. 24 V.S.A. § 4302

The V.S.A. commonly referred to as Act 200, or the Vermont Growth Management Act, is a statewide municipal and regional planning and development statute designed to promote community consensus for land use planning decisions.

Act 250. 10 V.S.A. § 151

Act 250 is a V.S.A. for land use planning that regulates large-scale developments according to 10 criteria related to natural resources, cultural resources, and social effects. The law is implemented through District Commissions throughout the state that review proposed projects and issue permits (VTrans 2014).

3.2.2 TRANSPORTATION AND TRAFFIC

3.2.2.1 Background on the Resource Area

The description of existing transportation systems, conditions, and travel patterns in the vicinity of the Project route documented in this section is based on a review of Internet Web searches, maps, aerial photography, and GIS data; visits to selected locations along the transmission cable route; and transportation data from VTrans.

3.2.2.2 Proposed NECPL Project

For purposes of this analysis, the ROI for transportation and traffic is the area within the construction corridors for the Project and intersections within 0.25 miles of the construction corridors, which would include some sections of roadways and railway crossings.

The Overland Segment follows a series of road ROWs, as described in ***Section 3.2.1***. This section describes the character of each of the relevant roadways and routes beginning from the northwestern part of the Overland Segment, which begins where the Lake Champlain Segment ends, and continuing to the southern tip of the segment in south-central Vermont.

The Overland Segment would begin upon exiting Lake Champlain in Benson, Vermont, and continue along local roads for 4.3 miles (including Bay Road, Stony Point Road, North Lake Road, Glenn Road, Stage Road, and Hulett Hill Road) to Vermont Route 22A. Vermont Route 22A branches off from the border of New York and the western-central part of Vermont as a spur route of New York State Route 22, beginning in Fair Haven, Vermont. At that point, the route is a two-lane rural roadway as it crosses into the town of Benson, Vermont, and then crosses Hubbardton River and parallels the river northward into the center of Benson (VTrans 2013). The cables would be buried within the existing ROWs, either adjacent to or under the roadway (if allowed by the Town of Benson). The cables would extend along Vermont Route 22A ROW for 8.2 miles south to U.S. Route 4 in Fair Haven, at which point the cables would enter the U.S. Route 4 ROW east to Route 7 in West Rutland for 17.4 miles.

U.S. Route 4, which is a shorter and more modern roadway than Vermont Route 22A, is a direct east-west road intersecting Interstate 91; U.S. Route 4 extends northwest of U.S. Route 7 after Vermont Route 103 ends (VTrans 2013). The Overland Segment on U.S. Route 4 would span the towns of Fairhaven and Castleton (TDI-NE 2014a). In Ira and West Rutland, the cables would continue in roadway ROWs to the east on U.S. Route 4 and eventually crossing Otter Creek.

In the town of Rutland, the Overland Segment would continue south and intersect with U.S. Route 7. U.S. Route 7 (also regionally known as the Ethan Allen Highway in Vermont) extends for 176 miles along the western side of the state as a predominantly two-lane rural road with a few short sections of expressway. A 10-mile section of U.S. Route 7 south of Rutland is one of only two sections of divided highway in Vermont (VTrans 2013). The Project would follow Route 7 ROW south to Route 103 in North Clarendon for approximately 2.7 miles.

From U.S. Route 7 in Clarendon, the Overland Segment would follow Vermont Route 103 for 3.8 miles, where it would enter a railroad ROW (Green Mountain Railroad) 2.7 miles southeast of the Clarendon/Shrewsbury border, extend down the Green Mountain Railroad Corporation ROW for 3.5 miles, and exit near the elevated railroad trestle. The Project would then follow Route 103 ROW south/southeast to Route 100 in Ludlow for approximately 10.6 miles.

In Ludlow, the segment would turn onto Vermont Route 100 for about 0.8 miles (the state's longest state highway). Vermont Route 100 is a 216.59-mile-long, north-south highway that extends nearly the entire length of the state. Known as the Scenic Route 100 Byway, the route is a popular tourist destination and is part of the "Skiers Highway," which connects travelers to Vermont's top skiing destinations. The Byway provides numerous historic, cultural, scenic, natural, and recreational opportunities (VTrans 2013; State of Vermont 2014). The Overland Segment would continue on local roads in Ludlow for about 4.5 miles to the proposed new converter station and then continue about 0.6 miles on local town roads and end at the existing VELCO Coolidge substation located in the town of Cavendish, Vermont (TDI-NE 2014a; TRC 2015).

Vermont Routes 22A and 100, and U.S. Routes 4 and 7, all of which are near the ROI for the Project, are located near the Vermont Rail System Rail Line (VRS 2014).

3.2.3 WATER RESOURCES AND QUALITY

Approximately 50 miles of the Overland Segment is within the Lake Champlain basin. The remaining portion (6 miles) of the Project is within the Connecticut River basin. The transmission line would be buried underground within ROWs for local and state roads. The ROI for water resources and water quality in the Overland Segment is 50 feet on either side of the centerline of the transmission line. This region represents the area in which potential effects on water quality could be significant.

The Project route intersects with an estimated 52 perennial streams and 72 intermittent streams. The National Park Service maintains the Nationwide Rivers Inventory (NRI), which is a listing of free-flowing river segments that may qualify as wild, scenic, or recreational river areas and are judged to be of more than local or regional significance (NPS 2011). Otter Creek is the only surface water listed in the NRI that the Project would cross; Otter Creek (near Rutland) is listed because of its historic and hydrologic values.

Surface waters in the Overland Segment are designated as Class A and Class B, and the same water quality standards discussed in ***Section 3.1.3*** apply to the Overland Segment.

The floodplains within the ROI of the Overland Segment include Zones A and AE. In contrast to Zone AE (100-year floodplain with a base flood elevation), Zone A is a 100-year floodplain without an established base flood elevation (FEMA 2014).

The bedrock of the Overland Segment consists primarily of mafic (magnesium and iron rich) igneous and metamorphic rocks. The principal aquifers in New England are fractured bedrock or crystalline rock aquifers (Flanagan et al. 2012). Drilled wells into the crystalline rock aquifers are common sources of residential and commercial water supplies.

Streams within the Overland Segment ROI varied in size from mapped Vermont Hydrograph Dataset streams and rivers, to small streams and channelized or ditched segments. Major water courses within the Overland Segment ROI include Hubbardton River, Mud Brook, North Brenton Brook, Castleton River, Clarendon River, Otter Creek, Cold River, Mill River, Freeman Brook, Branch Brook, Coleman Brook, and the Black River. All delineated streams and rivers within the Overland Segment ROI are Vermont Class B waters, as designated by the 2014 VWQSs (VHB 2014).

For a description of water source protection areas in the Overland Segment refer to ***Section 3.2.11.2***.

3.2.4 AQUATIC HABITATS AND SPECIES

3.2.4.1 Background on the Resource Area

This section describes the aquatic habitats and species that occur in the Overland Segment, except for protected species, which are discussed separately in ***Section 3.2.5***. The terrestrial portion of the transmission cable would be buried underground either within existing ROWs for roads and rail systems or on private property controlled by TDI-NE. The Overland Segment the southern end of Lake Champlain in the town of Benson to the new Ludlow HVDC Converter Station (56 miles) along the route identified in ***Section 3.2.2.2***

3.2.4.2 Proposed NECPL Project

The Overland Segment traverses open water features such as rivers, ephemeral, intermittent, and perennial streams, ponds, lakes, and marshes. The major water courses within the proposed transmission cable route include Hubbardton River, Mud Brook, North Brenton Brook, Castleton River, Clarendon River, Otter Creek, Cold River, Mill River, Freeman Brook, Branch Brook, Coleman Brook, and Black River, as well as many other named and unnamed ephemeral, perennial, and intermittent streams (***Figure 3-4***). The ROI for wetland habitat along the Overland Segment is 100 feet, extending 50 feet on either side of the transmission line centerline. This region represents the area where potential effects on aquatic habitats and species could occur.

Aquatic Habitat and Vegetation

The ROI is dominated by emergent vegetation, shrub swamps, forested wetlands, areas with lacustrine and palustrine unconsolidated bottom (PUB) habitat, floodplain forests, and riparian edges. ***Table 3-18*** lists common SAV species in Vermont waters (VDEC 2014b).

TABLE 3-18 COMMON SUBMERGED AQUATIC VEGETATION SPECIES IN VERMONT WATERS

Common Name	Scientific Name		Common Name	Scientific Name
Water marigold	*Bidens beckii*		Curly pondweed	*Potamogeton crispus*
Coontail	*Ceratophyllum demersum*		Ribbonleaf pondweed	*Potamogeton epihydrus*
Muskgrass	*Chara sp. and Nitella sp.*		Variable pondweed	*Potamogeton gramineus*
Waterweed	*Elodea Canadensis*		Floating-leaved pondweed	*Potamogeton natans*
Pipewort	*Eriocaulon aquaticum*		Flatstem pondweed	*Potamogeton zosteriformis*
Variable-leaf watermilfoil	*Myriophyllum heterophyllum*		Water buttercup	*Ranunculus sp.*
Northern watermilfoil	*Myriophyllum sibiricum*		Common bladderwort	*Utricularia macrorhiza*
Eurasian watermilfoil	*Myriophyllum spicatum*		Wild celery	*Vallisneria americana*
Common naiad	*Najas flexilis*		Water stargrass	*Zosterella dubia*
Big-leaf pondweed	*Potamogeton amplifolius*			

This Page Intentionally Left Blank

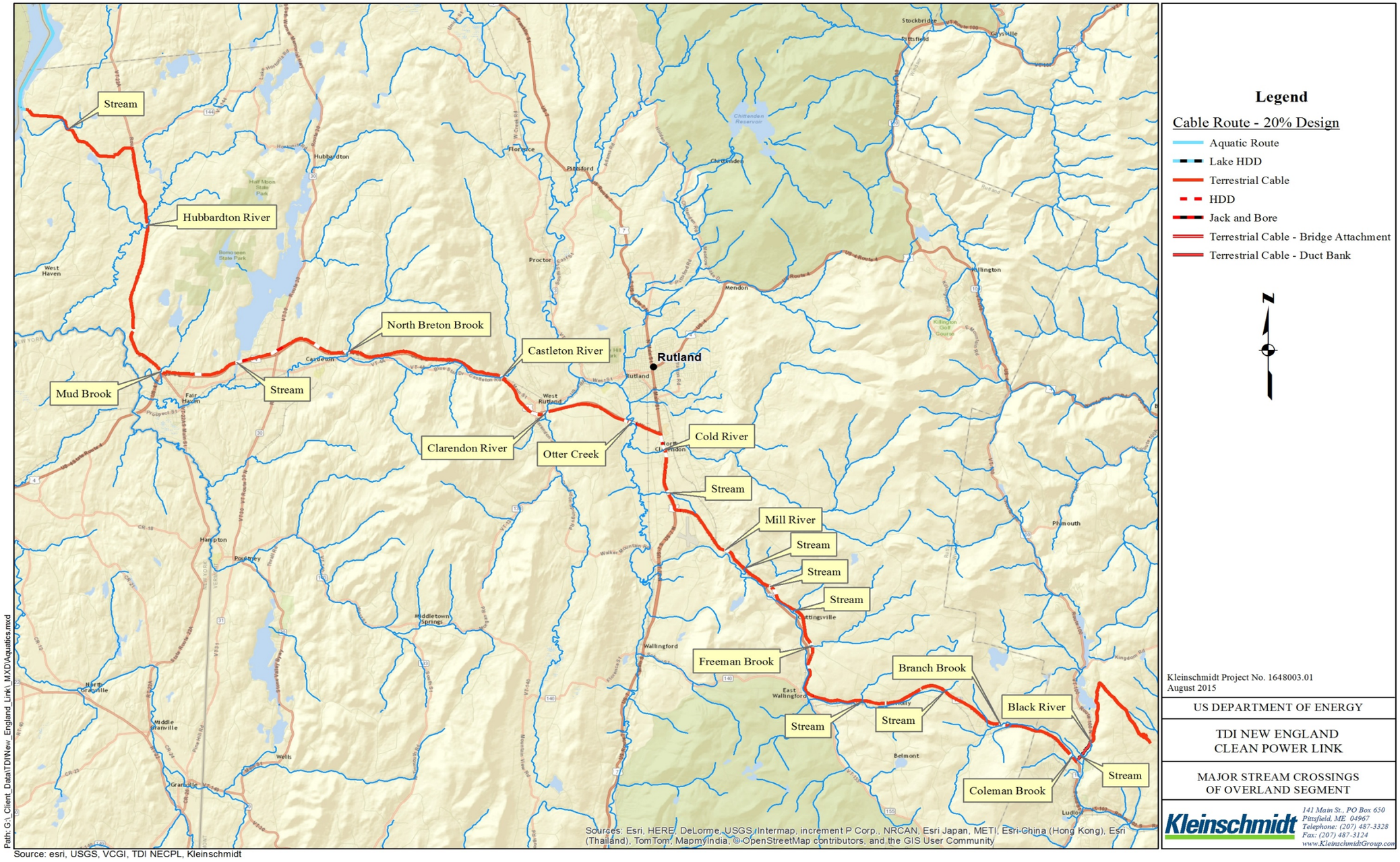

FIGURE 3-4 MAJOR STREAM CROSSINGS IN THE OVERLAND SEGMENT

This Page Intentionally Left Blank

Shellfish and Benthic Communities

The shellfish and benthic communities that inhabit perennial water bodies are generally similar to those described in ***Section 3.1.4.2***. Perennial streams that may be crossed by the Project within the Overland Segment potentially support shellfish and benthic communities. Intermittent streams that may be crossed by the Project within the Overland Segment may support fauna that are adapted to survive a wide range of hydrologic conditions (i.e., macroinvertebrate assemblages in intermittent streams are typically resistant to the drying phase) (Hussain and Pandit 2012).

Some of the most common macroinvertebrates found in Vermont rivers include midges (*Chironomidae*), net-spinning caddisflies (*Hydropsychidae*), small minnow mayflies (*Baetidae*), riffle beetles (*Elmidae*), blackflies (*Simuliidae*), fingernet caddisflies (*Philopotamidae*), crane flies (*Tipulidae*), and flat-headed mayflies (*Heptageniidae*) (Saint Michael's College 2014). Macroinvertebrates resistant to drought, including some species of flat worms, oligochaetes, harpacticoid copepods, Elminthidae and their larvae, some chironomid larvae, and *Hydrocarnia sp*. are capable of migrating to areas with sufficient moisture to allow persistence in intermittent streams (Hussain and Pandit 2012). Macroinvertebrates are likely to occur in the water bodies that may be crossed by the proposed transmission cable within the Overland Segment.

Fish

The Overland Segment would traverse several perennial freshwater streams large enough to contain various fish species. Migratory species listed in ***Table 3-19*** use the habitats provided by Lake Champlain tributaries for spawning, nursery areas, and juvenile foraging, typically seasonally. Adults migrate into the tributaries in spring or fall, depending on species, to spawn and depart the spawning grounds shortly after spawning or, in the case of sea lamprey, die after spawning. After hatching, young fishes may remain in nursery areas or refugia in natal rivers or streams, which typically include shoreline areas with adequate cover or vegetation to allow juveniles to avoid predation and abundant prey. The smaller, intermittent streams along the Project route are unlikely to contain sizeable populations of fish species or habitat.

3.2.5 AQUATIC PROTECTED AND SENSITIVE SPECIES

3.2.5.1 Background on the Resource Area

This section describes the aquatic protected and sensitive species that occur in the Overland Segment of the proposed transmission cable route. Aquatic protected and sensitive species are those that are afforded protection under the ESA (50 CFR Part 17) or 10 V.S.A. Chapter 123.

The potential presence of federally listed and state-listed aquatic species (including candidates for listing) within the ROI was determined by reviewing available publications and databases maintained by the VFWD and FWS (FWS 2012). Under 10 V.S.A. Chapter 123, the VFWD maintains a list of state-listed endangered and threatened species. The "take" (which includes harassment or harm) of a Vermont-listed or federally listed threatened or endangered species is prohibited unless permitted by the appropriate resource agency.

3.2.5.2 Proposed NECPL Project

The ROI for aquatic protected and sensitive species for the Overland Segment of the proposed Project includes open water features such as rivers, intermittent and perennial streams, ponds, lakes, and marshes dominated by emergent vegetation, shrub swamps, forested wetlands, areas with lacustrine and PUB habitat, floodplain forests, and riparian edges. The ROI for aquatic protected and sensitive species along the Overland Segment is 100 feet, extending 50 feet on either side of the transmission

line centerline. This region represents the area where potential effects on aquatic protected habitats and species could occur.

Federally Listed or Protected Aquatic Species

No aquatic species listed as threatened or endangered according to the federal ESA are known to occur in the ROI along the route of the Overland Segment.

State-listed Species

The state-listed lake sturgeon may occur seasonally in the larger tributaries of Lake Champlain that are included in the ROI along the route of the Overland Segment. Lake sturgeon typically migrate upstream to suitable spawning areas in spring and abandon these areas immediately after spawning (Bruch and Binkowski 2002). Historically, spawning was documented in the Missisquoi, Lamoille, and Winooski rivers and in Otter Creek (Marsden et al. 2010). Severe declines in sturgeon abundance since the 1940s have been attributed to overharvest, degradation of riverine habitat, and loss of access to spawning habitat due to dam construction. Although recent investigations have documented the presence of adult sturgeon during the spawning season in both the Lamoille and Winooski rivers and eggs have been collected in the Lamoille, Winooski, and Missisquoi rivers, no spawning adults or eggs were observed in Otter Creek (Marsden et al. 2010).

The fluted-shell mussel (*Lasmigona costata*) is a Lake Champlain basin species with habitat preferences that include medium-sized rivers and substrates of mud, sand, gravel, and aggregates of cobble, gravel, and sand (Kart et al. 2005). The species reportedly occurs in Lamoille River, Winooski River, Otter Creek, Lewis Creek, and Poultney River in Vermont (Kart et al. 2005). Shells have been taken in the Missisquoi River, but no live specimens have been observed. The Overland Segment ROI crosses an area mapped by the VFWD for the fluted-shell mussel at MP 105.2.

Riverine species such as the Eastern sand darter (*Ammocrypta pellucida)*, Northern brook lamprey (*Ichthyomyzon fossor)*, American brook lamprey (*Lamptera appendix)*, channel darter (*Percina copelandi)*, and stonecat (*Noturus flavus)* may occur in freshwater streams along the Overland Segment. ***Table 3-19*** lists state-listed fish species that may occur in streams along the Overland Segment with their state status and habitat preferences.

TABLE 3-19 VERMONT-LISTED THREATENED AND ENDANGERED FISH SPECIES, STATUS, AND HABITAT

Common Name	Scientific Name	Status	Habitat
Northern brook lamprey[1]	*Ichthyomyzon fossor*	Endangered	Near-shore, lotic areas with spawning occurring in spring at stream headwaters in shallow depressions.
Stonecat[2]	*Noturus flavus*	Endangered	Inland observations restricted to Upper LaPlatte and Missisquoi rivers. Adults spawn in spring/early-summer in streams and shallow rocky areas of lakes.
Channel darter[1]	*Percina copelandi*	Endangered	Observations restricted to LaPlatte, Poultney, and Winooski rivers. Typical habitat is shallow, slow-moving areas with coarse substrates.
Eastern sand darter[3]	*Ammocrypta pellucida*	Threatened	Summer spawners that inhabit sandy substrates of rivers and stream with depths greater than 23.62 inches and moderate current.
American brook lamprey[1]	*Lamptera appendix*	Threatened	Near-shore, lotic areas with spawning occurring in spring at stream headwaters in shallow depressions.

[1] DOE 2014
[2] Barrett 2006
[3] Grandmaison et al. 2004

3.2.6 TERRESTRIAL HABITATS AND SPECIES

3.2.6.1 Background on the Resource Area

This section addresses the potentially affected terrestrial habitats and species within the Overland Segment of the proposed NECPL Project.

The ROI for terrestrial habitats for the Overland Segment is 100 feet, extending 50 feet on either side of the transmission line centerline. The temporary construction area is 20 to 50 feet wide; this area is the primary location of potential effects on terrestrial habitats and species. Mobile species may enter the ROI from outside the construction corridor; consequently, habitats within 0.25 miles of the centerline were also assessed (TDI-NE 2014a).

3.2.6.2 Proposed NECPL Project

A variety of terrestrial habitats and species occur within the Overland Segment ROI which support several species of plants and wildlife. Upland forests within and adjacent to the ROI are dominated by Northern Hardwood Forest Formation, Spruce-Fir-Northern Hardwood Forest Formation, and the Oak-Pine-Northern Hardwood Forest Formation as well as several areas within the ROI include anthropogenic habitats resulting from agriculture, roads, transmission lines, and residential development. (TDI-NE 2014a). Dominant northern-hardwood forests within the Overland Segment

includes sugar maple (*Acer saccharum*), American beech (*Fagus grandifolia*), eastern hemlock (*Tsuga canadensis*),, red maple (*Acer rubrum*), yellow birch (*Betula alleghaniensis*), white pine (*Pinus strobus*), red spruce (*Picea rubens*), balsam fir (*Abies balsamea*), and white spruce (*Picea glauca*). Shrub layer vegetation includes black cherry (*Prunus serotina*), hobblebush (*Viburnum alnifolium*), striped maple (*Acer pensylvanicum*), shadbush (*Amelanchier spp.*), and wild raisin (*Viburnum nudum var. cassinoides*). Herbaceous vegetation, which is more common in open canopy forest, is extensive and may include wood fern (*Dryopteris spp*.), Christmas fern (*Polystichum acrostichoides*), shinning clubmoss (*Lycopodium lucidulum*), sarsasparilla (*Alaria nudicaulis*), and common wood sorrel (*Oxalis acetosella*) (TDI-NE 2014a).

The three most commonly occurring invasive species within the Overland Segment are honeysuckle, purple loosestrife, and common buckthorn. These species are abundant throughout most of the Overland Segment, but are most commonly found along Route 4. ***Table 3-20*** contains a list of all non-native invasive species observed along the Overland segment (AE 2014c)

TABLE 3-20 OBSERVED NON-NATIVE INVASIVE SPECIES WITHIN THE OVERLAND SEGMENT ROI

Common Name	Scientific Name
Goutweed	*Aegopdium podagraria*
Garlic Mustard	*Alliaria petiolata*
Flowering Rush	*Butomus umbellatus*
Oriental Bittersweet	*Celastrus orbiculatus*
Honeysuckle	*Lonicera sp.*
Purple Loosestrife	*Lythrum salicaria*
Phragmites	*Phragmites australis*
Japanese Knotweed	*Polygonum cuspidatum*
Common Buckthorn	*Rhamnus cathartica*
European Buckthorn	*Rhamnus frangula*
Black Swallowwort	*Vincetoxicum nigrum*

Source: AE 2014b

Four new, potentially significant natural communities were identified in the Overland Segment ROI, and five natural communities that are likely to be significant were identified previously (TRC 2014). ***Table 3-21*** lists the potentially significant natural communities in the Overland Segment ROI.

TABLE 3-21 POTENTIALLY SIGNIFICANT NATURAL COMMUNITIES WITHIN THE OVERLAND SEGMENT ROI

Natural Community	Quantity	State Rank
Dry Oak-Hickory-Hophornbeam Forest	1	S3
Temperate Hemlock-Hardwood Forest	1	S4
Temperate Hemlock Forest	1	S4
Mesic Maple-Ash-Hickory-Oak Forest	4	S3
Mesic Red Oak-Northern Hardwood Forest	1	S4
Sugar Maple-Ostrich Fern Riverine Floodplain Forest	1	S1
Total	9	

Source: TRC 2014

A large portion of the Overland Segment occurs along maintained road ROWs (Vermont Route 22A, U.S. Route 4, U.S. Route 7, Vermont Route 103, and Vermont Route 100); therefore, most terrestrial habitats are maintained and mowed regularly. The segment intersects riparian areas for stream and river crossings, but these are limited.

The Blueberry Hill Wildlife Management Area (WMA) is the only WMA that occurs within 0.25 miles of the ROI. The Project ROI crosses two agency-mapped deer wintering areas (DWA): DWA1189 and DWA1188. In these areas the Overland Segment would be restricted to existing maintained ROWs (TDI-NE 2014a). A potential black bear travel corridor, within mapped Bear Production Habitat, is located along Route 103 near the Mount Holly and Ludlow town line (TRC 2014).

Wildlife within the ROI may include a variety of mammals, amphibians, reptiles, birds, and invertebrate species. Wildlife that may occur within the ROI is limited by the amount of available habitat. Much of the Overland Segment ROI is dominated by maintained areas or areas with current or historic anthropogenic influences. Most of the mammalian species potentially occurring within the Overland Segment ROI are habitat generalists common throughout their ranges and may include woodchuck, house mouse (*Mus musculus*), and meadow vole. Forest edge or early successional habitats may support white-tailed deer, coyotes, red foxes, and bats. Herptiles may include snapping turtles (*Chelydra serpentina)*, common garter snake, American toad (*Anaxyrus americanus*), grey tree frog (*Hyla versicolor*), green frog (*Lithobates clamitans*), bullfrog (*Lithobates catesbeianus*), pickerel frog (*Lithobates palustris*), and redback salamander (*Plethodon cinereus*). Birds that may occur within the Overland Segment ROI typically include species that prefer forest edges or shrubby early successional habitats, such as blue-winged warbler (*Vermivora cyanoptera*), grey catbird (*Dumetella carolinensis*), Eastern towhee (*Pipilo erythropthalmus*), rose-breasted grosbeak (*Pheucticus ludovicianus*), and mourning dove (*Zenaida macroura*) (TDI-NE 2014a).

3.2.7 TERRESTRIAL PROTECTED AND SENSITIVE SPECIES

3.2.7.1 Background on the Resource Area

This section addresses the protected and sensitive terrestrial species within the proposed Overland Segment of the Project route. These species are protected under the federal ESA (50 CFR Part 17) or Vermont's Endangered Species Law (10 Vermont Statutes [V.S.A.] Chapter 123). The protection of birds is regulated by the MBTA and the BGEPA. Any activity, intentional or unintentional, resulting

in take of migratory birds, including eagles, is prohibited unless otherwise permitted by the FWS (50 C.F.R. Sec. 10.12 and 16 U.S.C. Sec. 668(a)).

Rare species (e.g., rare and uncommon plants) are species with only a few populations in Vermont and its continued existence in the state is threatened. Rare species encounter threats from development of their habitat, harassment, collection, and suppression of natural processes, such as fire. The VFWD uses a ranking scheme that describes the rarity of species in Vermont. The range is from S1 (very rare) to S5 (common and widespread). Rare or uncommon species do not receive the same protections as those listed as endangered or threatened, but are listed to inform biologists, planners, developers, and the general public about rare native plants (VNHI 2015)

The ROI for protected and sensitive terrestrial species along the Overland Segment is 100 feet, extending 50 feet on either side of the transmission line centerline. This area includes the construction corridor and adjacent areas that would be most affected by the Project (TDI-NE 2014a).

3.2.7.2 Proposed NECPL Project

A survey of protected and sensitive species was completed along the Overland Segment (approximately 56 miles) in April of 2014. A total of 101 rare plant populations and 83 uncommon plant populations were identified (TRC 2014). These populations include 53 different plant species, three of which are state endangered and six of which are state threatened (TRC 2014). ***Table 3-22*** lists protected and sensitive plant species identified within the Overland Segment ROI.

TABLE 3-22 VERMONT-LISTED TERRESTRIAL PLANT SPECIES IDENTIFIED WITHIN THE OVERLAND SEGMENT ROI

Common Name	Scientific Name	State Status	Habitat/Life History
Drummond's rockcress	*Boechera stricta*	E	Cliffs, balds, or ledges, forests, talus and rocky slopes, woodlands
Bronze sedge	*Carex foena*	E	Anthropogenic, woodlands and meadows and fields
Greene's rush	*Juncus greenei*	E	Anthropogenic, cliffs, balds, or ledges, grasslands, meadows and fields, and ridges
Butterfly-weed	*Asclepias tuberosa*	T	Anthropogenic, grasslands, meadows, and fields
Low bindweed	*Calystegua spithamaea ssp. spithamaea*	T	Anthropogenic, woodlands, grasslands, meadows and fields, sandplains and barrens
Prostate tick-trefoil	*Desmodium rotundifolia*	T	Forests, talus and rocky slopes, woodlands
Marsh horsetail	*Equisetum palustre*	T	Marshes, shores of rivers or lakes, wetland margins
Hairy bush-clover	*Lespedeza hirta ssp. Hirta*	T	Anthropogenic and woodlands
Virginia chain-fern	*Woodwardia virginica*	T	Anthropogenic, bogs, marshes, swamps, and wetland margins
Note: Anthropogenic---man-made or disturbed habitats E= Endangered, T= Threatened			

Source: TRC 2014

A total of 14 rare animal species were identified as potentially occurring along the Overland Segment ROI. Federally listed species include the Indiana bat and the northern long-eared bat as there is the presence of potential roosting habitat. State protected and sensitive species that may be present within the Overland Segment ROI are the Indiana bat, little brown bat, northern long-eared bat, eastern rat snake, upland sandpiper, and timber rattlesnake. These species may be present because they are known to forage on or near water bodies. Bald eagles are known to breed on Lake Bomoseen within the Overland Segment. No critical habitat for protected or sensitive terrestrial species occurs within the Overland Segment ROI. ***Table 3-23*** lists species protected by federal or state laws or those proposed for listing that may occur in the Overland Segment ROI (TDI-NE 2014a).

TABLE 3-23 FEDERAL AND STATE PROTECTED TERRESTRIAL WILDLIFE SPECIES THAT MAY OCCUR WITHIN THE OVERLAND SEGMENT ROI

Common Name	Scientific Name	State Status	Federal Status
Upland sandpiper	*Bartramia longicauda*	E	-
Timber rattlesnake	*Crotalus horridus*	E	
Bald eagle	*Hailiaeetus leucocephalus*	E	D
Little brown bat	*Myotis lucifugus*	E	-
Northern long-eared bat	*Myotis septentrionalis*	E	T
Indiana bat	*Myotis sodalist*	E	E
Eastern rat snake	*Elaphe obsoleta*	T	-
E= Endangered, T= Threatened, D= Delisted, C= Candidate for listing			

Source: TRC 2014; VNIH 2012

Federally Listed or Protected Wildlife Species

Bald Eagle

Life history information is provided in ***Section 3.1.7.*** The bald eagle is protected under the BGEPA rather than the ESA. Based on habitat preferences and foraging behavior, the bald eagle may occur within the Overland Segment ROI.

Indiana Bat

Life history information is provided in ***Section 3.1.7.*** In August and September of 2014 a survey for potential summer roosting trees for Indiana bat was completed along 14.25 miles of the proposed Project route. The survey area was determined after consultation with the VDFW and the FWS (AE 2014) The survey resulted in the identification of 116 potential day-roosting trees; the most common roosting trees included shagbark hickories (*Carya ovate*), black locust (*Robinia pseudoacaia*), sugar maple, and red maple (AE 2014). Based on habitat preferences, foraging behavior, and the presence of day-roosting trees, the Indiana bat may occur within the Overland Segment ROI (TRC 2014).

Northern Long-eared Bat

Life history information is provided in ***Section 3.1.7***. Based on habitat preferences and foraging behavior, the northern long-eared bat may occur within the Overland Segment ROI.

State-listed Wildlife Species

Upland Sandpiper
The upland sandpiper is found in large areas of grassland, fallow fields, and meadows. The species is often associated with pastures, farms, and airports. Preferred habitats are generally dominated by short and tall grasses for foraging and nesting. Sandpipers reach breeding areas in late April or early May and create nests beneath bushes or clumps of grass by scraping the ground. Both males and females incubate the eggs, which hatch after approximately 21 to 27 days of incubation. Chicks fledge approximately one month after hatching. Based on the land use within the Overland Segment ROI, several locations may provide habitat for the upland sandpiper; therefore, this species may occur within the Overland Segment ROI (TRC 2014).

Little Brown Bat
Life history information is provided in ***Section 3.1.7***. Based on habitat preferences and foraging behavior, the little brown bat may occur within the Overland Segment ROI.

Eastern Rat Snake
The eastern rat snake is known to exist in two regions of Vermont. Based on available information and surveys completed in 2014, this species was identified in the town of Benson, Vermont. This species prefers rocky talus slopes and rocky woodlands with southern exposures. Foraging during the summer months takes place in woodlands, wetlands, and abandoned structures. The Overland Segment ROI crosses an eastern rat snake area mapped by the Vermont NHI; therefore, eastern rat snake may occur within the Overland Segment ROI (TDI-NE 2014a; TRC 2014).

Timber Rattlesnake
In Vermont, populations of timber rattlesnake are limited to the southern portion of Lake Champlain and western Rutland County. Talus slopes with southern exposures near exposed rocky ledges are preferred habitat, particularly in the presence of oak-dominated forested habitats. The Overland Segment ROI crosses a timber rattlesnake area mapped by the Vermont NHI; therefore, timber rattlesnake may occur within the Overland Segment ROI (TDI-NE 2014a; TRC 2014).

Migratory Birds
Typical migratory birds found within the Overland Segment ROI are those associated with early successional shrubby areas or forest edges. Common species in the ROI may include blue-winged warbler, eastern towhee, rose-breasted grosbeak, black-billed cuckoo, and grey catbird. The Overland Segment offers little habitat for species that do not tolerate degradation and disturbance (TDI-NE 2014a). Migratory birds, all of which are Birds of Conservation Concern within the Overland Segment during the breeding season may include American bittern (*Botaurus lentiginosus*), Bicknell's thrush (*Catharus bicknelli*), black-billed cuckoo, black-crowned night-heron (*Nycticorax nycticorax*), blue-winged warbler (*Vermivora pinus*), Canada warbler (*Wilsonia canadensis*), cerulean warbler (*Dendroica cerulean*), golden-winged warbler (*Vermivora chrysoptera*), olive-sided flycatcher (*Contopus cooperi*), pied-billed grebe (*Podilymbus podiceps*), and wood thrush (*Hylocichla mustelina*). In addition ducks such as mallards, black ducks, and others frequent the area. Bald eagles represent the most commonly occurring year-round resident migratory bird and the short-eared owl (*Asio flammeus*) may overwinter within ROI (FWS 2015).

3.2.8 TERRESTRIAL WETLANDS

3.2.8.1 Background on the Resource Area

This section addresses terrestrial wetlands that may be affected as a result of the proposed NECPL Project.

3.2.8.2 Proposed NECPL Project

The ROI for wetland habitat along the Overland Segment is 100 feet, extending 50 feet on either side of the transmission line centerline (TDI-NE 2014a). This region represents the area where potential effects on Class II wetlands could occur. No Class I wetlands were identified within the ROI (Vermont Wetland Rules, Vt. Code R. 12 004 056, Section 4.2).

TDI-NE completed wetland delineations on 42.79 acres of the Overland Segment ROI during the 2014 growing season (VHB 2014) and approximately 4.8 acres of wetlands were identified in the ROI. Wetland boundaries were identified using methods outlined in the *Regional Supplement to the Corps of Engineers Wetland Delineation Manual: Northcentral and Northeast Region (Version 2.0)* (USACE 2011). Information related to the VWR wetland classification was also collected. Wetland functions were evaluated qualitatively according to the VWR Section 5 (Functional Criteria for Evaluating a Wetland's Significance) and types of observations recorded in the field notes include:

- 5.1 Water Storage for Flood Water and Storm Runoff
- 5.2 Surface and Ground Water Protection
- 5.4 Wildlife Habitat
- 5.5 Exemplary Wetland Natural Community
- 5.6 Rare Threatened and Endangered Species Habitat
- 5.7 Education and Research in Natural Sciences
- 5.8 Recreational Value and Economic Benefits
- 5.9 Open Space and Aesthetics
- 5.10 Erosion Control through Binding and Stabilizing the Soil

Wetland Types

In May of 2014 a survey was conducted for vernal pool sites based on definitions and criteria for vernal pools provided by the USACE (2007) and Thompson and Sorenson (2005). No vernal pools, biological indicators of vernal pools, or potential vernal pools are present within the Overland Segment ROI (VHB 2014).

Wetlands identified within the Overland Segment ROI include a wide variety of wetland classes. Dominant wetland classes include PEM, PSS, PFO, and PUB. Most of the Overland Segment would be installed within exiting ROWs; therefore, PEM wetland is one of the more commonly occurring wetland types within the Overland Segment ROI. Common species in these wetlands include sedges (*Carex spp.*), rushes (*Juncus spp.*), jewelweed (*Impatiens capensis*), sensitive fern (*Onoclea sensibilis*), cattail (*Typha latifolia*), reed-canary grass (*Phalaris arundinacea*), purple loosestrife (*Lythrum salicaria*), and narrow-leaved cattail (*Typha angustifolia L*) (VHB 2014).

Palustrine scrub-shrub wetlands are common within the Overland Segment ROI, particularly along areas adjacent to cleared ROWs or in early successional areas associated with development or agriculture. Representative vegetation in PSS wetlands varies but may include red osier dogwood (*Cornus sericea*), meadow sweet (*Spiraea alba*), honeysuckle (*Lonicera spp.*), speckled alder (*Alnus incana*), and viburnums (*Virburnum spp.*) (VHB 2014).

Palustrine forested wetlands are less common within the Overland Segment ROI because most of the segment is collocated along existing ROWs. When PFO wetlands occur, they are dominated by red maple American elm (*Ulmus americana*), yellow birch, green ash (*Fraxinus pennsylvanica*), willow (*Salix spp.*), and balsam fir (VHB 2014).

Wetland Functions

Based on the 2010 VWR (under 10 S.V.A § 905(7)), the functions of wetlands within the Overland Segment ROI include storing floodwaters and stormwater run-off, protecting the quality of surface water and groundwater, and providing wildlife habitat. Wetlands within maintained ROWs, like those within much of the Overland Segment ROI, still protect water quality and provide storage. The erosion control and stabilization function occurs frequently within the ROI; that function is tied closely to dense vegetation that can occur within maintained ROWs. Functions more closely associated with forested habitats or undisturbed habitats (e.g., wildlife habitat) are less commonly observed within the Overland Segment ROI. In most cases, those functions are only present within the wetland or are provided at a low level. High-level functions are limited, which is related to the level of disturbance along the Overland Segment ROI (VHB 2014).

3.2.9 GEOLOGY AND SOILS

3.2.9.1 Background on the Resource Area

This section addresses the geology, topography and physiography, soils, and geological hazards (e.g., seismicity) associated with the proposed NECPL Project route.

3.2.9.2 Proposed NECPL Project

The ROI for geology and soils is defined as 100 feet on each side of the centerline of the proposed transmission route. This ROI was selected based on an expectation that, given the construction activities proposed, effects on geology and soils would be likely to occur within this area.

Physiography and Topography

The Overland Segment lies in two USFS ecoregions. The area closest to the Lake Champlain Segment of the Project route lies within the St. Lawrence and Champlain Valley section within the Laurentian Mixed Forest Province of the warm continental division of the humid temperate domain. The remainder of the Overland Segment is within the Green, Taconic, and Berkshire mountains of the Adirondack-New England Mixed Forest-Coniferous Forest-Alpine Meadow Province of the warm continental regime mountains in the humid temperate domain.

The St. Lawrence and Champlain Valley section is a glaciated landscape and is characterized by wave-cut terraces and low hills (USFS 2005). Elevations range from 80 to 1,000 feet above MSL and increase gradually eastward and westward from Lake Champlain (USFS 2014).

The portion of the Green, Taconic, and Berkshire mountains section in which the Project would be located is highlands characterized by dissected, flat-topped plateaus (up-warped peneplains) with scattered monadnocks. Elevation ranges from 600 to 4,000 feet with isolated peaks greater than 4,300 feet. Local relief ranges from 1,000 to 3,000 feet (USFS 2014).

Prime Farmland

No prime farmlands exist within the ROI for the Overland Segment of the proposed NECPL Project.

Geology
The bedrock of the Overland Segment consists primarily of mafic (magnesium and iron rich) igneous and metamorphic rocks (Flanagan et al. 2012). Geologic formations in the St. Lawrence and Champlain Valley section are mostly carbonate and shales with some sandstones. Geologic formations in the Green, Taconic, and Berkshire mountains section includes quartzite, schist, metavolcanics, gneiss, and amphibolite (USFS 2005).

The road and railroad ROWs in the Overland Segment encompass disturbed geology and soils that have been altered by activities such as excavation, grading, and filling during roadway and railroad construction.

Soils
Soils within the Overland Segment are primarily fine sandy loams, silt loams, silty clay loams, loamy sands, and soils formed in till. Slopes vary, but most of the route contains low slopes. Most soils are never flooded, although soils that are moderately well drained or somewhat poorly drained are often partially hydric.

Seismicity
The 2014 USGS National Seismic Hazard Map for Vermont indicates that the Overland Segment has a 2 percent probability of exceeding a peak ground acceleration of 10 to 20 percent g in 50 years. This represents the potential for minor to moderate structural damage. The seismic hazard generally increases from south to north in the Overland Segment (USGS 2014).

3.2.10 CULTURAL RESOURCES

3.2.10.1 Background on the Resource Area

The NHPA is the primary federal law protecting cultural resources. Cultural resources include archaeological sites, historical structures and objects, and traditional cultural properties. Historic properties are cultural resources that are listed in or eligible for listing in the NRHP because of their significance and to retain integrity (36 CFR 60.4). The NHPA addresses several types of historic properties, including prehistoric and historic archaeological sites, buildings and structures, districts, and objects (DOE 2014).

NHPA Section 106 requires federal agencies to consider the effects of their proposed actions (undertakings) on historic properties and to develop measures to avoid, minimize, or mitigate any potential adverse effects. The DOE's compliance with NHPA Section 106 requirements is being coordinated with the development of this EIS; however, this EIS is not intended to substitute for an NHPA Section 106 agreement document according to 36 CFR 800.8(c).

In February 2015, the DOE formally initiated NHPA Section 106 consultation with the Consulting Parties regarding the proposed Project. The DOE provided three cultural resource studies to the Consulting Parties with a letter requesting their feedback on both the proposed APE and the completed studies (***Section 3.1.10***). The DOE met with VTSHPO and USACE on July 16, 2015 to establish the APE for the proposed Project and review the draft PA. Per letter from the VTSHPO on August 31, 2015, the VTSHPO concurred with the Draft PA noting two recommendations, as discussed in ***Section 5.1.10*** and ***5.2.10***.

The DOE will work with the Consulting Parties and other interested parties, as appropriate, to finalize and execute a Final PA. The PA addresses effects of future construction, operation, and maintenance of the proposed Project for properties listed on the NHRP or potentially eligible for listing.

3.2.10.2 Proposed NECPL Project

Work on the Overland Segment would require excavation along approximately 56.2 terrestrial miles extending from Alburgh, Vermont (0.5 miles), to Ludlow, Vermont, in order to lay the two, 5-inch cables approximately 4 feet underground. Since the Project would include ground-disturbing activities, it has the potential to affect archaeological resources. The Project would require five work areas ranging in size from 4.6 acres to 27 acres. These work areas, including the area proposed for a new HVDC converter station in Ludlow, have the potential to affect above-ground historic properties.

Archeological and Overland Area of Potential Effects

Federal regulations define the APE as the geographic areas within which the project may directly or indirectly alter the character or use of historic properties, if any such properties exist (36 CFR 800.16[d]). The proposed APE for the Overland Segment consists of the properties immediately fronting on or adjacent to the town and state roads and the Green Mountain Railroad line along which the proposed Project would run, and includes the parcels of land acquired for the Project in Alburgh, Benson, and Ludlow; the proposed APE includes the area within visual range of the proposed new HVDC converter station in Ludlow (Olausen and Barry 2014). The proposed APE (for indirect and direct effects) is also the ROI and includes the maximum ROW widths from the centerline of town roads in Alburgh, Benson, Fair Haven, and Ludlow; the ROW maintained by the VTrans for Vermont Routes 22A, 100, and 103; and the ROW maintained by the Green Mountain Railroad Corporation along an approximately 3-mile portion of track in Shrewsbury and Wallingford. In addition, the proposed APE contains five work parcels that are proposed as part of the Project to accommodate HDD entry and exit locations and the new HVDC converter station (Heitert 2014). Construction activities (e.g., excavation activities and installation of transmission cables) are expected to occur within a 25-foot-wide corridor, or 12.5 feet on either side of the proposed Project centerline. The APE might be further refined through additional engineering.

Regional Prehistory

Archaeological evidence documents the presence of humans in central and northern Vermont for nearly 12,000 years. Archaeological evidence for all of the periods described in the following sections has been found in various sites in Vermont (Heiter 2014). Although few pre-contact sites have been found within the APE, several additional sites have been identified within a larger area extending 0.5 miles from the centerline of the proposed transmission cable alignment.

The earliest people in the Paleoindian Period arrived about the time of the last ice age and subsisted on large animals, such as elk, caribou, and mastodon, supplemented by lichen, moss, and scrub growth. Their settlement patterns remain unclear, although they are likely to have included large base camps, small residential camps, and small, task-specific locations. Paleoindian populations were likely to have been the first to use watercraft on what was then the Champlain Sea but now is reduced in size to Lake Champlain (Sabick et al. 2014).

During the Archaic Period, consisting of the Early Archaic (7000-5500 B.C.), Middle Archaic (5500-4000 B.C.), and Late Archaic (4000-900 B.C.), the climate became gradually warmer and more seasonable. This gradually changing climate sustained new, pine-dominated forests that eventually gave way to forests dominated by deciduous oak, beech, sugar maple, elm, and ash. It led to the early elimination of the kinds of megafanuna that had sustained the earlier populations; these larger animals were replaced by smaller game such as deer and bear. New and more extensive plant resources together with riverine and estuarine plant and animal species became available with the warmer climate. By the Late Archaic Period, lithic (stone-making) technologies became more diverse and advanced, and ceramics first appeared late in the period.

The subsequent Woodland Period is divided into three smaller periods, the Early Woodland (900-100 B.C.), the Middle Woodland (100 B.C. to A.D. 1050), and the Late Woodland (A.D. 1050-1600). Early in this period the archaeological evidence points to expanded trade networks with lithic materials coming from as far away as Maine, while ceramic patterns were diversified. By the Late Woodland period, the evidence points to a greater reliance on agriculture, which spurred the development of more stable communities with small villages or hamlets located along major rivers.

At the time of the first European contact in Vermont in the early seventeenth century, the Western Abenaki were the dominant native group, although the larger Haudenosaunee (Iroquois) nations were located immediately to the west. Although family and community patterns remained largely intact through the early years of French, Dutch, and English contact, the ravages of new diseases forever altered these communities and populations. These communities were soon joined by a series of missions created by French Jesuits.

Regional History

The St. Lawrence Iroquois, the Mohawk Iroquois, the Mohican, and the Western Abenaki occupied the Champlain Valley by the early sixteenth century. In 1534, French explorer Jacques Cartier entered the Gulf of St. Lawrence looking for the Northwest Passage. During the next 2 years, Cartier attempted to develop trade relations with the Haudenosaunee and other tribes living along the banks of the St. Lawrence River. With the influx of Europeans to the area, disease, confusing political and economic relations, and continuous wars split the native communities apart and forced them to join outlying native groups (Sabick et.al 2014). Samuel de Champlain explored the region in 1609 and discovered a nearly complete water route from the St. Lawrence River to the Hudson River in New York. Both the French and Dutch had great interest in the Champlain Valley, were heavily involved in the fur trade, and depended on the Native Americans in the valley for furs.

Shifting alliances among the English, French, and the various Native American groups led to frequent periods of war throughout eastern New York and New England, including the proposed Project area, from the late seventeenth into the mid eighteenth centuries. Lake Champlain was a particular focus for both the French and the English because it served as a vital transportation corridor between the French settlements along the St. Lawrence River and the Hudson River Valley and its outlet at the harbor of New York. This focus on the lake continued into the Revolutionary War and into the early national period.

During the French and Indian War (1754 to1763), several naval battles were fought on Lake Champlain, as the British sought to dislodge the French from their forts at Ticonderoga, Crown Point, and Chimney Point (LCMM 2014). During the Revolutionary War (1775 to 1783), naval battles took place on both Lake Champlain and the Hudson River, as British and American forces fought to control the waterways and access to Canada (LCMM 2014). In 1779, an American military garrison was established at West Point, near the present-day Village of Highland Falls. The War of 1812 brought further conflict to the Champlain Valley, as British and American forces again sought control of Lake Champlain. This was a period of great economic development in the region because the access that Lake Champlain provided to the St. Lawrence River allowed for an extensive trade with the French in Canada; this trade continued until the War of 1812 despite vigorous attempts by the young government in Washington to stop it.

During the War of 1812 the fledgling American Navy sought to maintain control over Lake Champlain, which brought renewed attention and development to the region. Conflicts with the British extended into the inland portions of Vermont, as the British sought to control the mouth of Otter Creek. The defeat of the British Royal Navy in 1814 essentially ended the era of naval fleets on the lake and brought a sustained peace to the region (LCMM 2014).

The construction of the Champlain Canal between 1817 and 1823 provided a navigable waterway link between communities in the north and manufacturing centers along the Hudson River and the Atlantic seaboard. This led to a rapid increase in population and economic activity in western Vermont. The canal underwent several realignments and improvements throughout the 1800s to accommodate increased traffic and larger vessels. The growth of the railroads decreased the significance of the canal system but brought new economic benefits to the region (LCMM 2014). The modern Barge Canal replaced the Champlain Canal in the early twentieth century. The Barge Canal was an attempt to revitalize the canal system; however, commercial canal traffic peaked in the 1890s and has since decreased steadily.

The several towns through which the proposed Project would pass demonstrate the slow growth in the region during the late eighteenth and early nineteenth centuries, followed by accelerated development following the chaos of the War of 1812 into the late nineteenth and early twentieth centuries. The region remained generally agricultural, particularly in the northwestern section, where the level areas in Lake Champlain's plain precluded the use of water-powered manufacturing. The increased availability of water power in the areas near Rutland, Windsor, and Benson, including Otter Creek and Hubbardton River allowed for milling and manufacturing by the 1820s and 1830s. The presence of limestone, granite, and particularly marble allowed for the development of extractive industries and processing by the middle of the nineteenth century. Other industries included metal working (e.g., nails and rolling mills) and paper by the mid nineteenth century. Later in the century, the marble and slate industry, based in Rutland, Proctor, and Castleton, became a dominant economic force in the region. The arrival of railroads in the 1850s allowed for rapid expansion of the manufacturing capacity of the region because goods could get to bigger markets more easily. Despite this rapid growth of the region's manufacturing capacity, the areas between the village centers remained heavily agricultural.

Lake Champlain became a tourist attraction as early as the early National period, but recreation became the primary use of the lake only after World War II (1941-1945). At that time the only commercial vessels that remained on the lake were car ferries and a small number of steel barges and diesel tugs (Sabick et al. 2014). Inland, Lake Bomoseen became a resort and recreation destination by the mid and late nineteenth century, with recreational boaters plying the waters and resort houses and hotels lining the shores.

The proposed Project corridor extends through primarily rural areas and away from most historic manufacturing centers. The narrow corridor, which only brushes the yards of historic home sites, is unlikely to contain any meaningful historic archaeological deposits. In addition, since much of the corridor lies along roads, even the more historic transportation corridors have been subject to continual road maintenance and improvements; this development probably compromised the integrity of any post-contact archaeological resources. The proposed development parcels in Alburgh, Benson, and Ludlow are larger and have smaller areas that are likely to have been disturbed; these parcels have a higher potential to contain historic archaeological evidence (Heiter 2014).

Examples of historic properties that would be expected within the setting of the Project route or APE include the following:

- terrestrial archaeological sites (prehistoric or historic sites containing physical evidence of human activity but no standing structures);
- architectural properties (buildings or other structures or groups of structures, or designed landscapes that are of historic or aesthetic significance);
- cemeteries;
- properties recognized by the Champlain Valley National Heritage Partnership; and

- sites of traditional, religious, or cultural significance to Native American tribes, including archaeological resources, sacred sites, structures, neighborhoods, prominent topographic features, habitats, plants, animals, and minerals that the tribes consider essential for the preservation of their traditional culture.

Cultural Resources Identified in the Overland Segment Area of Potential Effect: Archaeology
Public Archaeology Laboratory (PAL) conducted a Phase IA Archaeological Reconnaissance Survey of the Overland Segment. The Phase IA reconnaissance survey included archival research and a field survey designed to identify previously recorded sites and areas of archaeological sensitivity. The scope of work for the Phase IA reconnaissance survey was reviewed and approved by the VTSHPO in April, 2014 (Heiter 2014).

The Phase IA reconnaissance survey identified three previously recorded pre-contact sites, one previously recorded post-contact site, and four field-identified archaeological resources consisting of the foundation remains of nineteenth century residences and outbuildings, all within the APE. ***Table 3-24*** describes the four previously recorded archaeological sites. An additional 10 known, pre-contact sites are located within a one-half-mile corridor extending from either side of the centerline of the proposed transmission cable. These 10 sites are well outside the APE and would not be affected by the Project.

Using a modeling system approved by the VTSHPO, the Phase IA survey identified additional archaeologically sensitive areas along 11.6 linear miles of the proposed Project (representing 21 percent of the Project) that are scattered along the length of the transmission cable route, and in four of the proposed five work parcels (Heiter 2014). The Phase IA reconnaissance survey report contains maps derived from GIS data that identify the archaeologically sensitive areas within the APE. ***Table 3-25*** describes the four field-identified archaeological resources. The Phase IA reconnaissance report made use of the tenth-mile posts that TDI-NE used to identify locations along the corridor.

TABLE 3-24 KNOWN ARCHAEOLOGICAL SITES IN THE OVERLAND SEGMENT AREA OF POTENTIAL EFFECT

Site Number/Name	Town	Description	NRHP Status
VT-RU-0082/ Wright Roberts Cabin	West Rutland	Two lithic workshops Middle Woodland Period	Unevaluated
FS-RU-0021	Rutland	Isolated find-project point Middle Archaic Period	Unevaluated
VT-RU-0081	Rutland	Camp site Late Woodland Period	Not eligible
VT-RU-0082	Rutland	Cabin built by Wright Roberts, one of Rutland's earliest settlers. 18th century	Unevaluated

TABLE 3-25 FIELD IDENTIFIED ARCHAEOLOGICAL RESOURCES IN THE OVERLAND SEGMENT AREA OF POTENTIAL EFFECT

Field-Identified Archaeological Resource Number	Town	Mile-Post location	Description
1	Alburgh	0.3-0.4	Jumble of stones, possible foundation remains
2	Ludlow	149.250	Mid to late 19th century E. Dutton House, drylaid fieldstone foundation
3	Ludlow	149.4	Mid to late 19th century Erastus Gates House, drylaid fieldstone foundation, well, and outbuilding
4	Ludlow	150.8	Mid to late 19th century B.C. Weston House, drylaid fieldstone foundation

Cultural Resources Identified in the Overland Segment Area of Potential Effect: Above-Ground Resources

In addition, PAL completed a Historic Architectural Reconnaissance Survey of the Overland Segment to identify historic architectural properties and assess the potential of the proposed Project to adversely affect properties listed or eligible for listing in the Vermont State Register and NRHP. The Project survey area consisted of the APE as defined for indirect effects. The survey consisted of archival research to identify properties listed on the State Register and NRHP and previously documented properties within the survey area for historic architectural properties, and research into the developmental history of the communities and properties along the proposed Project route. This research identified the types of resources known to exist within the APE and properties for which State Register and NRHP eligibility evaluations have been completed. The study included fieldwork consisting of a windshield survey on publicly accessible roads along the proposed Project route; during the fieldwork, each property that had been identified previously was visited to verify its existence and to document any changes that have occurred since the initial survey. The survey crew recorded previously undocumented properties that appeared to be at least 50 years old.

The architectural reconnaissance survey identified 57 historic architectural properties within the APE. Three are listed in the NRHP; 16 are listed in the State Register, but not in the NRHP; and 4 were recommended eligible for the State Register and NRHP. The Project has the potential to affect 23 historic properties; 3 are historic districts, and 20 are individual properties. ***Table 3-26*** presents the 23 historic architectural properties that are listed or eligible for listing in the State Register and NRHP within the APE.

TABLE 3-26 STATE REGISTER AND NATIONAL HISTORIC ARCHITECTURAL PROPERTIES IN THE OVERLAND SEGMENT AREA OF POTENTIAL EFFECT

Property Name/Address	Town	State Register/ National Register for Historic Places Status
S. Mott House, 55 Bay Road	Alburgh	Listed in the State Register
Gary Malkin House, 2760 North Lake Road	Benson	Listed in the State Register
Farm Complex, 2400 North Lake Road	Benson	Listed in the State Register
Manly Bowen House, 2091 North Lake Road	Benson	Listed in the State Register
House, 114 Old North Lake Road	Benson	Recommended eligible for National Register
Benson Village Historic District	Benson	Listed in the National Register
Mountain View Stock Farm Historic District, Route 22A	Benson	Listed in the National Register
Barber-Strong Complex, 5412 Route 22A	Benson	Listed in the State Register
Smith-Stannard Complex, 3 Route 22A	Benson	Listed in the State Register
Stannard Homestead House, Route 22A	West Haven	Listed in the State Register
Hamilton Homestead Complex, 2227 Route 22A	Fair Haven	Listed in the State Register
Apple Barns, corner of Point of Pines and Creek Road	Castleton	Listed in the State Register
House, 493 North Road	Castleton	Listed in the State Register
Francis McNeil House, 185 McNeil Lane	West Rutland	Listed in the State Register
East Clarendon Railroad Station, Route 103 and East Clarendon Road	Clarendon	Listed in the National Register
Rutland Railroad and Cuttingsville Trestle	Multiple and Wallingford	Listed in the State Register
House, 1408 Route 103	Mount Holly	Recommended eligible for National Register
Cook-Martin House, 205 Route 103	Mount Holly	Listed in the State Register
Grahamsville Historic District	Ludlow	State Register Historic District
Lakeside Saw Shop, East Lake Road	Ludlow	Listed in the State Register
Elison Farm, 95 East Lake Road	Ludlow	Recommended eligible for National Register
Parfitt House, 819 Pettiner Hill Road, TH-6	Ludlow	Listed in the State Register
Augusts G. Fullam House, 278 TH-9	Ludlow	Listed in the State Register

3.2.11 INFRASTRUCTURE

The proposed Project would have primarily local effects on existing infrastructure; therefore, the general ROI for infrastructure is within the designated construction corridors for the proposed Project route, which varies along the transmission line route but is generally within 25 feet of the proposed transmission line centerline.

Infrastructure systems and lines that intersect with the proposed Project route (i.e., crossings) in the Overland Segment are described in the following paragraphs.

3.2.11.1 Electrical Systems

The many instances of aboveground electrical infrastructure within the Project ROI include both overhead electrical power transmission and local distribution lines. The ROI for the Overland Segment encompasses 13 transmission cable crossings at the following locations: MP 121.5, MP 121.7, MP 123.0, MP 124.3, MP 129.7, MP 129.8, MP 137.5, MP 141.9, MP 144, MP 146.5, MP 149.7, MP 153.8, and MP 154.3 (***Figure 3-5***). The Project ROI also encompasses four underground power cable crossings (TRC 2015).

3.2.11.2 Water Supply Systems

Refer to ***Section 3.2.11*** for general information about the Vermont State water supply systems. The Overland Segment ROI would include nine public water systems using groundwater sources that have either designated SPAs or public water sources within the immediate vicinity. The ROI would pass by four small private wells (VDEC 2011).

Figure 3-6 shows water SPAs in the Overland Segment. Land uses near the water SPA are generally agricultural forested with scattered residential use.

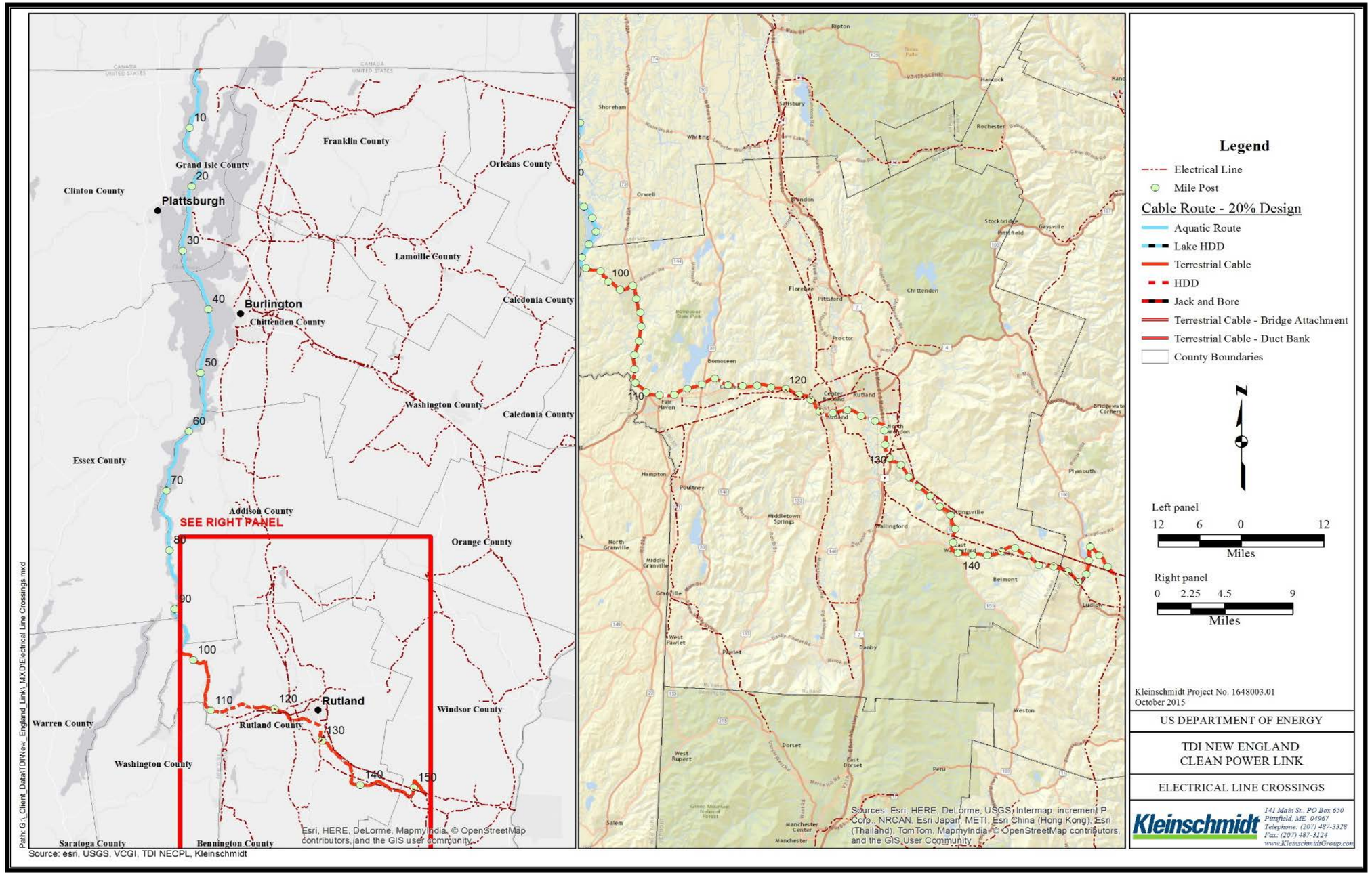

FIGURE 3-5. NECPL PROPOSED ELECTRICAL LINE CROSSINGS

This Page Intentionally Left Blank

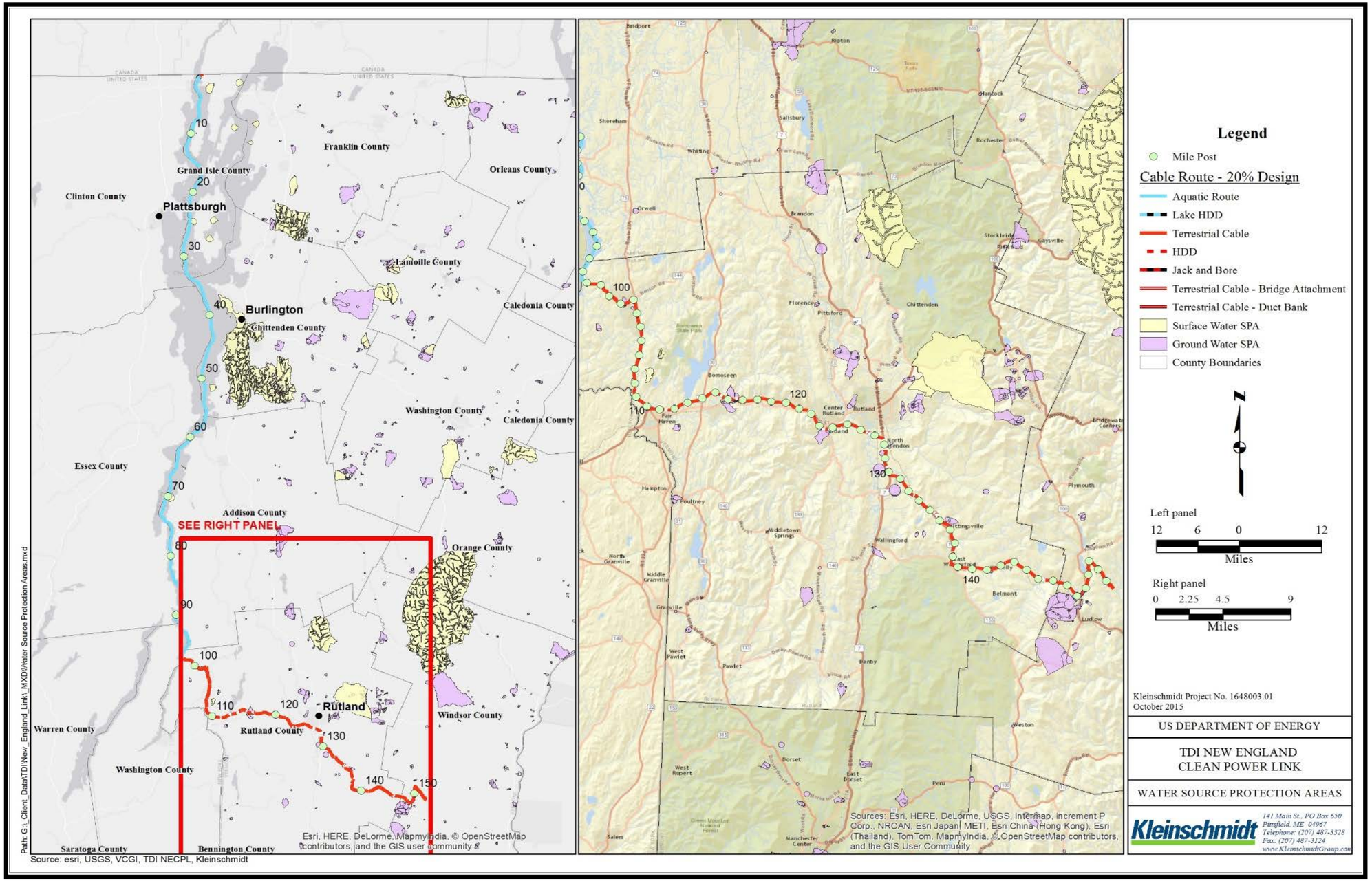

FIGURE 3-6. WATER SOURCE PROTECTION AREAS

This Page Intentionally Left Blank

3.2.11.3 Stormwater Management

The Overland Segment ROI traverses both the Lake Champlain and the Connecticut River basins. Stormwater management information is available by town and infrastructure includes small, common stormwater features such as retention ponds, infiltration basins, swales, wet detention basins, and ditches. Available information indicates 237 storm lines, 34 swales, 5 overland flow features, 58 roof drains, and 3 infiltration pipes within the Overland Segment ROI.

3.2.11.4 Communications

No telecommunications lines or infrastructure have been identified in the Overland Segment ROI. However, above-ground electrical infrastructure along roadways may carry telecommunication lines.

3.2.11.5 Natural Gas Supply

No natural gas pipelines or infrastructure have been identified in the Overland Segment ROI (NPMS 2012).

3.2.11.6 Liquid Fuel Supply

No pipelines or infrastructure for liquid fuel or other hazardous liquids have been identified in the Overland Segment ROI (NPMS 2012).

3.2.11.7 Sanitary Sewer and Wastewater Treatment

Available information indicates that two sanitary sewer lines are located within the Overland Segment ROI (***Figure 3-7***).

3.2.11.8 Solid Waste Management

Of the three operating landfills within the State of Vermont, the closest municipal landfill is the Salisbury Landfill, located approximately 20 miles from the Overland Segment. The permitted fill rate of the Salisbury Landfill is 1,000 tons per year (WM&PD 2015).

This Page Intentionally Left Blank

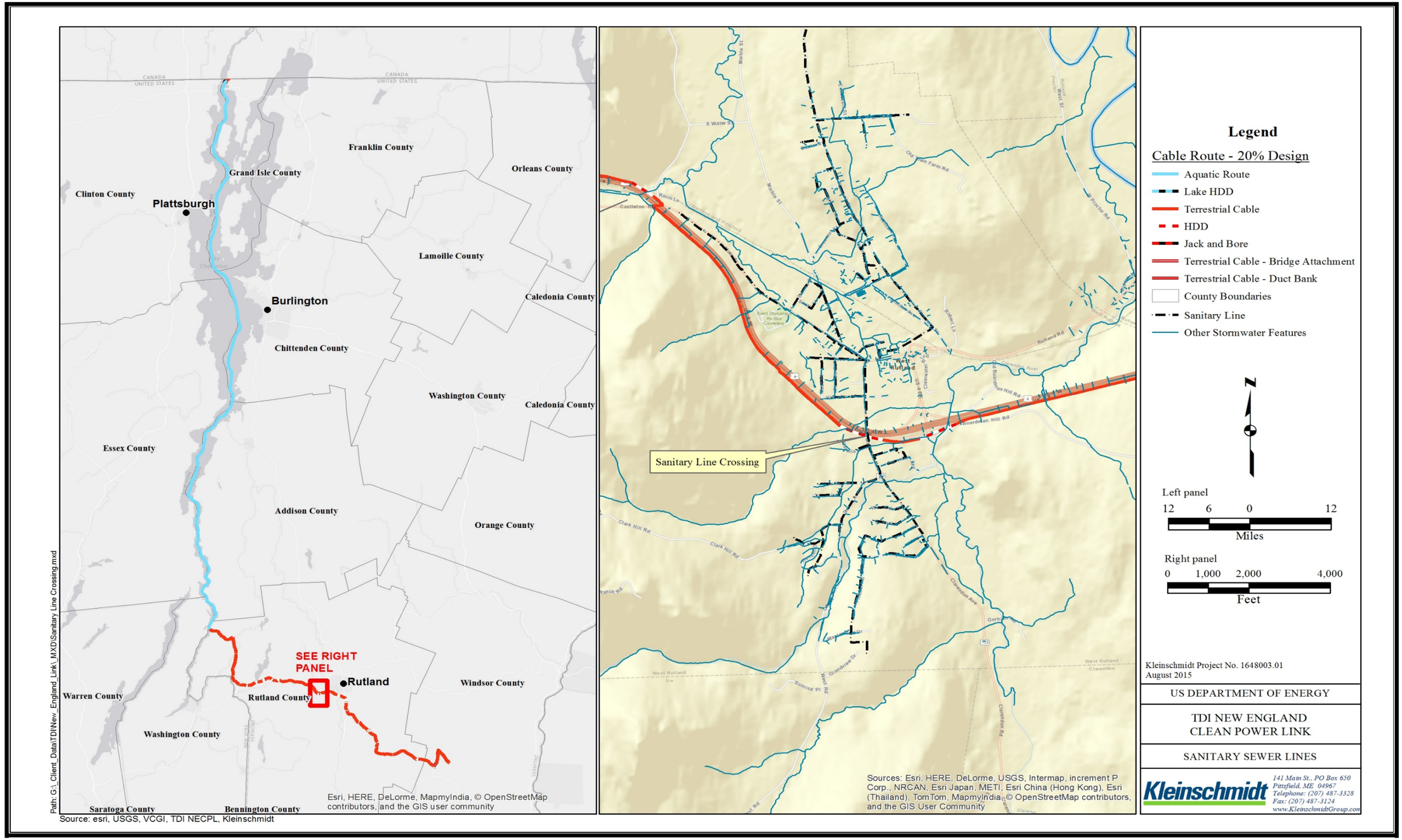

FIGURE 3-7. NECPL PROPOSED PROJECT SANTIARY SEWER LINE CROSSINGS

This Page Intentionally Left Blank

3.2.12 RECREATION

3.2.12.1 Background on the Resource Area

This section describes the recreation resources that occur in the Overland Segment of the proposed NECPL Project area. Recreation resources are areas and infrastructure designated by local, state, and federal planning entities to offer visitors and residents opportunities to enjoy leisure activities. Recreation resources include diverse opportunities that can range from quiet, undisturbed areas to highly developed recreation sites with permanent infrastructure. Recreation resources in the Overland Segment include open space, parklands, hiking and biking trails, recreational water bodies, wilderness and other conservation areas, playgrounds, and ballparks.

The ROI for recreation resources is the area within 1 mile around the centerline of the transmission cables in the Overland Segment. This area is defined as the ROI because it includes the permanent ROW within which the transmission line would be operated and maintained, which is approximately 12 feet wide, and the temporary work areas that may be affected during construction (i.e., construction corridors). The recreation resources ROI is entirely within the state of Vermont.

3.2.12.2 Proposed NECPL Project

Recreation resources in the ROI for the Overland Segment include parks, forests, recreational waters, trails, golf courses, and ski areas. After exiting Lake Champlain and following a rural stretch of Vermont Route 22A, the proposed transmission line follows a highly developed, limited-access segment of U.S. Route 4. Recreation resources near this portion of U.S. Route 4 include Lake Bomoseen (a popular recreational boating resource), Blueberry Hill WMA, and two snowmobile crossings. The snowmobile trails are managed by the Vermont Association of Snow Travelers (VAST). At the intersection of Route 4 and Lake Bomoseen, the proposed transmission line would cross under the lake by HDD 200 feet from the shore. It would then exit by HDD 200 feet from the shore and continue in the Route 4 ROW. There is no access to Blueberry Hill from U.S. Route 4 because it is a limited access highway.

The transmission line would depart U.S. Route 7 south of Rutland and would turn east towards the substation in Ludlow. Recreation facilities located in this section include the Long Trail an end-to-end hiking trail (with a parking lot on the south side of the highway) in Vermont that would cross the proposed transmission route on Vermont Route 103 in Clarendon. This is a popular section of trail because it coincides with the Appalachian Trail and accesses Clarendon Gorge and a scenic suspension bridge. The proposed cable would go under the Appalachian Trail and Long Trail via HDD. A third VAST snowmobile trail crosses Vermont Route 103 in Mount Holly also in the proposed Overland Segment. In addition, there are some developed recreation facilities in Ludlow that are adjacent to the ROI for the Overland Segment. The Okemo Mountain Resort, a ski and full-season mountain recreational resource, is located along Vermont Route 103 and Vermont Route 100 in Ludlow. Although primary access to the facility is south of the ROI for the Overland Segment, access to the resort's Jackson Gore Inn is off Vermont Route 103 in the ROI. Okemo Mountain Resort owns Okemo Valley Golf Club, which is located off Vermont Route 100 near the ROI as it terminates at the substation in Ludlow. Access to the facility, however, is on Vermont Route 100 south of Vermont Route 103 and is not in the ROI.

3.2.13 PUBLIC HEALTH AND SAFETY

This section addresses the existing information on the proposed NECPL Project on public health and safety in the Overland Segment. The evaluation includes potential effects on construction personnel

and members of the public resulting from construction and operation of the Overland Segment of the Project. A safe environment is one in which there is no potential for death, serious bodily injury or illness, or property damage or in which those risks have been optimally reduced. Human health and safety encompasses workers' health and safety during construction, and public safety during construction and subsequently during operation of the newly constructed facilities.

3.2.13.1 Background on the Resource Area

The DOE analyzed the affected environment of a similar project proposed in New York in the CHPE FEIS. The CHPE FEIS describes the public health and safety issues for the CHPE Project, which would be the same as those for the NECPL Project, except that it would occur in Vermont. The portions of the CHPE FEIS that describe the affected environment for public health and safety (Volume 2, pp 3-31 to 3-36 and pp 3-110 to 3-111) are incorporated here by reference.

3.2.13.2 Proposed NECPL Project

The ROI for public health and safety is within the designated construction corridors for the proposed Project route, which varies along the proposed transmission line route but is generally within 25 feet of the proposed transmission line centerline. The primary public health and safety concern during construction activities is construction safety. This ROI represents the maximum area likely to be exposed to magnetic and electric fields associated with transmission line operation and maintenance, and emergency repair activities. The ROI for public health and safety along the Overland Segment of the Project is described in ***Table 3-1***.

Contractor Health and Safety
Maintaining a safe construction site requires adhering to regulations imposed for the benefit of construction workers. Complying with worksite safety regulations reduces the likelihood of contractor injury. These regulations specify health and safety procedures and standards, the amount and type of training required for industrial workers, the use of PPE, administrative controls, engineering controls, and permissible exposure limits for workspace stressors. Occupational hazards for the Overland Segment of the proposed NECPL Project would include risks associated with terrestrial construction activities and heavy equipment installation, heavy equipment transportation, contact with electrical lines, and potential to sever existing utility lines. All contractors working on the proposed NECPL Project would be responsible for following federal and state safety regulations and workers compensation programs and for working in a manner that poses no undue risk to personnel.

Industrial hygiene programs address exposure to hazardous materials, use of PPE, and availability of MSDSs. Contractors would be responsible for maintaining industrial hygiene during construction of the proposed NECPL Project and for reviewing potentially hazardous workplace operations and monitoring exposure to workplace chemicals (e.g., asbestos, lead, hazardous materials), physical hazards (e.g., noise, falls), and biological agents (e.g., infectious waste, wildlife, poisonous plants). Contractors would recommend and evaluate controls (e.g., prevention, administrative, engineering) to ensure that personnel are properly protected or unexposed and would implement a medical surveillance program that provides occupational health physicals for workers subjected to any accidental chemical exposures.

Public Health and Safety
The degree of hazard exposure depends on the location of the hazardous device relative to the population; therefore, threats to public safety and accident risks often can be identified, reduced, or eliminated before they become an issue. Hazardous activities include transportation, construction, operation and maintenance, and the creation of noisy environments. Effects on public health and safety

may be minimized by routing a project through areas that members of the general public use infrequently. The proposed route for the Overland Segment avoids major population centers (colored as red, pink, and white in the land cover dataset). During construction and maintenance, work sites would be clearly marked to minimize risks to the public.

Electric and Magnetic Field Safety

Anything that carries an electric current produces EMFs. This EIS defines EMFs as electric and magnetic fields with an extremely low frequency range of 3 to 3,000 Hz. Electric and magnetic fields are not coupled or interrelated in the ELF range the same way that they are at higher frequency ranges. Therefore, in the ELF range it is more appropriate to refer to them as "electric and magnetic fields" rather than "electromagnetic fields. Electric and magnetic fields result from the flow of electrical current through wires or electrical devices and increase as the current increases. Shielded underground cables do not produce electric fields above ground but can produce a magnetic field (NIEHS 2002). Magnetic fields pass through most materials, are difficult to shield, and are the primary concern regarding potential health effects associated with EMFs from transmission lines (DOE 2012).

The strength of the EMF produced by transmission lines decreases with increasing distance from the line as described in ***Section 3.1.13.2***. ***Table 3-7*** in ***Section 3.1.13.2*** lists the typical magnetic field levels at distances of 1 and 2 feet from common household appliances. The Bg measurements in ***Table 3-7*** refer to the background magnetic fields produced by the spinning of the Earth's core. The strength of this natural field varies and ranges from 470 to 590 mG over the United States (CHPEI 2012). Earth's magnetic field in the vicinity of Burlington, Vermont, is estimated at 53,606.8 nT or 536.068 mG (NOAA 2014).

No federal or Vermont standards limit residential or occupational exposure to DC or low-frequency (i.e. 60 Hz) magnetic or electric fields. Several scientific and governmental agencies have established guidelines for exposure to DC magnetic fields, including the International Committee on Electromagnetic Safety, the International Commission on Non-Ionizing Radiation Protection (ICNIRP), the Environmental Protection Agency, and the Food and Drug Administration. The most relevant and current exposure guideline for this Project is the ICNIRP guideline that recommends that the general public not be exposed to static magnetic fields above 4,000,000 mG. Higher exposure limits are recommended for workers in occupational environments. These limits are ceiling values; they apply to both short- and long-term exposure (Exponent 2014).

3.2.14 NOISE

3.2.14.1 Background on the Resource Area

The existing soundscape for the Overland Segment includes natural sources (e.g., wind, vegetation rustle, and wildlife noises); transportation sources (train, automobile, and truck traffic noise) and machinery noise (e.g., facility climate, ventilation equipment, and equipment required for local industrial operations).

3.2.14.2 Proposed NECPL Project

The ROI for noise is primarily the Project construction corridor. The ROI extends 600 feet on either side of the transmission line route centerline because the state of Vermont does not have a non-industrial noise standard; however, the state of New York has a standard that was applied in the CHPE FEIS, which is employing the same technology for project construction but on the New York side of Lake Champlain. Sound generated along the proposed NECPL Project route varies because some portions are located in rural settings and other portions are closer to towns and highways where

increases in sound levels occur due to population density. Noise-sensitive receptors in the Overland Segment include residences, schools, churches, libraries, and areas in which a quiet setting is a basis for recreational use of the area.

In October 2014, Resource Systems Group (RSG) performed sound studies at the proposed location of the new Ludlow HVDC Converter Station to characterize the existing acoustical environment of the proposed Project area. The new HVDC converter station is likely to be the only long-term source of noise along the NECPL Project route. RSG sampled three locations around the new HVDC converter station site and found that the existing soundscape around the proposed converter site consists primarily of car and airplane traffic with a sound pressure level of approximately 30 dBA.

- North of the new HVDC converter station, nighttime Leq and 10th percentile level (L90) were 33 dBA and 20 dBA, respectively, and dominant sound sources included passing cars and airplanes.
- West of the new HVDC converter station, nighttime Leq and 10th percentile level (L90) were 33 dBA and 26 dBA, respectively, and dominant sound sources included passing cars, airplanes, birds, and yard maintenance equipment.
- Southeast of the new HVDC converter station, nighttime Leq and L90 were 31 and 24 dBA, respectively, and sound sources included airplanes and an occasional passing car (Kaliski 2014)

3.2.15 HAZARDOUS MATERIALS AND WASTES

3.2.15.1 Background on the Resource Area

This section considers the storage, transportation, handling, and use of hazardous materials; the generation, storage, transportation, and disposal of hazardous wastes; and the presence of special hazards in the Overland Segment of the proposed NECPL Project area. Hazardous materials and hazardous wastes are defined by 49 CFR 171.8 and 42 U.S.C. Part 6903, respectively. Examples of hazardous materials include liquid fuels, solvents, oils, lubricants, and hydraulic fluids. Examples of hazardous wastes include spent hazardous materials and by-products from their use. Special hazards are regulated under 15 U.S.C. Chapter 53 and include asbestos-containing material, PCBs, and lead-based paint.

The EPA authorized the VDEC as the agency responsible for hazardous waste regulatory programs in Vermont. Under this authorization process, the VDEC issues permits, conducts inspections, signs consent orders, gathers and processes data, compels corrective actions including assessing fines, and approves various manifests and management plans on behalf of the EPA. Vermont hazardous waste management regulations are defined by 3 V.S.A. § 2853(5) and 10 V.S.A. Chapter 159.

The hazardous materials and wastes ROI for the NECPL Project is the area within the construction corridor and construction staging areas. ***Table 3-1*** depicts the ROI for both Overland and Lake Champlain segments of the proposed Project. The ROI was selected because it encompasses the geographic area that would be affected by the Project during construction, operations, maintenance, and emergency repair activities when hazardous materials constituents may be used and generated, or when existing contaminants may be encountered.

3.2.15.2 Proposed NECPL Project

Terrestrial transmission cables do not contain any hazardous fluids, thereby eliminating any potential for soil contamination from the cables. The installation of the terrestrial transmission line would require the transport, handling, use, and on-site storage of hazardous materials and petroleum products such as gasoline, diesel fuel, oils, hydraulic fluids, and cleaners. Most of these products would be used in the

operation of the graders, trucks, and trenching equipment needed to install the terrestrial transmission line. Small amounts of hazardous wastes, primarily used oils, solvents, and lubricants, may be generated as by-products of the process of installing the terrestrial transmission (TDI-NE 2014d).

No specific areas of contamination have been identified along the proposed route of the terrestrial transmission line based on a GIS review of known hazardous material sites in Vermont (TDI-NE 2014d); however, railroad ROWs generally have high potential for environmental contamination. The primary sources of such contamination may include herbicides used to control unwanted vegetation, creosote and arsenic leaching from preserved wood ties, petroleum products dripping from trains, PAHs from the diesel exhaust of locomotives, and metals from industrial waste found in the crushed stone ballast used on some railroad tracks. Although no specific areas of environmental concern have been identified along the railroad ROWs that are within or adjacent to the Overland Segment, the extended use of these areas for railroad operations indicates the potential for undiscovered environmental contamination.

3.2.16 AIR QUALITY

The Overland Segment includes the approximately 56-mile transmission line route from Benson, Vermont, to the new HVDC converter station in Ludlow, Vermont. The air quality standards, climate patterns, and emission sources in the Overland Segment are the same as those described in ***Section 3.1.16*** for the Lake Champlain Segment. The ROI for air quality for the Overland Segment includes the counties of Rutland and Windsor in Vermont. These are the counties along the proposed Project route most likely to be affected by emissions associated with Project construction. Rutland and Windsor counties are part of the Champlain Valley Interstate AQCR. ***Table 3-27*** lists the most recently published emission inventory for each county in the ROI and the Champlain Valley Interstate AQCR. All counties in the ROI for the Overland Segment are in attainment for all criteria pollutants.

TABLE 3-27 2011 OVERLAND SEGMENT AIR EMISSIONS INVENTORY

Counties and AQCRs	CO	NO_x	SO_2	VOC	$PM_{2.5}$	PM_{10}
Rutland	13,903	1,626	308	9,140	981	3,598
Windsor	19,975	2,415	283	10,237	1,549	3,982
Champlain Valley AQCR	**236,158**	**30,347**	**9,752**	**145,387**	**13,254**	**40,914**

Source: EPA 2014
Note: All emissions are in tons per year.

3.2.17 SOCIOECONOMICS

3.2.17.1 Background on the Resource Area

Socioeconomics is defined as the basic attributes and resources associated with the human environment, particularly characteristics of population and economic activity. Regional birth and death rates, and people moving in and out of the area affect population levels. Economic activity typically encompasses employment, personal income, and industrial or commercial growth. Changes in these two fundamental socioeconomic indicators are typically accompanied by changes in other components, such as housing availability and the demand for public services.

The ROI for socioeconomic resources is the geographical area in which most of the socioeconomic effects of implementing the proposed NECPL Project would occur. The residency distribution of employees, commuting distances and times, and the locations of businesses that provide goods and services to employees and their dependents are important criteria in evaluating effects on socioeconomic resources. Other criteria may include regional economic activity, population, housing, and schools. The ROI for the Overland Segment is defined as the Vermont counties, including Rutland and Windsor, traversed by the transmission line route (***Figure 2-2***).

3.2.17.2 Proposed NECPL Project

Socioeconomic data at the county, state, and federal levels permit characterization of baseline conditions in the context of regional, state, and federal trends. The socioeconomic baseline conditions are presented in the analysis using three spatial levels: (1) county-level data, (2) state-level data, and (3) federal-level data for the United States. Data for the state of Vermont and the United States are included for comparison.

Population

The ROI for the Overland Segment includes Rutland and Windsor counties in Vermont. Each county represented approximately 10 percent of the state's population in 2010. Growth trends indicate population loss over the last 13 years of almost 2 percent for Windsor County and approximately 3 percent for Rutland County (***Table 3-28***).

TABLE 3-28 OVERLAND SEGMENT POPULATION SUMMARY

Location	2000	2013	2000-2013	
			Population Change	Population Percent Change
United States	281,421,906	311,536,594	30,114,688	10.7
State of Vermont	608,827	625,904	17,077	2.8
Rutland County	63,400	61,270	-2,130	- 3.4
Windsor County	57,418	56,416	-1,002	- 1.7

Sources: EPS-HDT 2014

Employment

The largest industry by percentage of workforce employed in both counties in the ROI for the Overland Segment is management, professional, and related industries, representing between 34 and 40 percent of all employment. This mirrors both state and federal statistics. Sales and office employment is the next largest employment sector, employing between 21 percent of the workers in Windsor County and 22 percent in Rutland County. More than 17 percent of employed citizens of Rutland and Windsor counties are employed in the service sector. The construction and transportation industries combined contribute 18 percent and 24 percent, respectively, of the employment in these areas; farming and related work contributes less than 2 percent for each county. ***Table 3-29*** provides complete employment data for the Overland Segment ROI.

TABLE 3-29 2013 OVERLAND SEGMENT OVERVIEW OF EMPLOYMENT BY INDUSTRY

Industry	United States	State of Vermont	Rutland County	Windsor County
Civilian Employed Population > 16 years	**141,864,697**	**324,350**	**30,233**	**28,593**
Management, professional & related	36.2%	39.9%	34.4%	40.2 %
Service	18.1%	17.6%	19.3%	17.2 %
Sales & office	24.6%	22.0%	22.6%	21.2 %
Farming, fishing, and forestry	0.7%	1.3%	1.0%	1.6%
Construction, extraction, maintenance & repair	8.3%	8.9%	9.3%	9.3 %
Production, transportation, & material moving	12.0%	10.4%	13.4%	10.6 %

Source: EPS-HDT 2014

In 2013, unemployment across the Overland Segment ROI was lower than the national average. The national average was 7.4 percent; whereas, annual unemployment rates in the counties affected by the Overland Segment ranged from 4.0 percent in Windsor to 5.1 percent in Rutland County (USDC 2014). The unemployment rates for these counties were similar to the statewide unemployment rate of 4.4 percent (***Table 3-30***).

TABLE 3-30 2013 OVERLAND SEGMENT UNEMPLOYMENT

Annual Unemployment	
United States	7.4%
State of Vermont	4.4
Rutland County	5.1%
Windsor County	4.0%

Source: USDC 2014

Housing

An analysis of available rental housing was conducted because a small number of specialized workers could come from areas outside of the community or county where work is to take place and may need short-term housing. In the Overland Segment ROI, short-term housing vacancies consist mainly of housing for seasonal, occasional, or recreational use and rental vacancies. Vacancy rates are 22 percent in Rutland County and 27 percent in Windsor County (EPS-HDT 2014).

3.2.18 ENVIRONMENTAL JUSTICE

The Overland Segment traverses Rutland and Windsor counties in areas ranging from rural (Benson) to suburban (outskirts of Rutland). The ROI for environmental justice in the Overland Segment includes those counties in which the project could have a disproportionately high and adverse human

health or environmental effect. ***Table 3-31*** shows the demographics of minority populations in the counties in the ROI.

In 2013, minority populations within Rutland and Windsor counties were predominantly Asian (0.7 percent), Hispanic or Latino (1.3 percent), and Black (0.5 percent). These percentages are far less than those reported for the state of Vermont. Among census tracts within these counties, the largest minority population is in census tract 9637 in Rutland County (8.2% minority).

The census track data used for the environmental justice analysis is located in ***Appendix J***.

TABLE 3-31 2013 OVERLAND SEGMENT DEMOGRAPHICS FOR RUTLAND AND WINDSOR COUNTIES COMPARED TO VERMONT

Demographics	Counties		State
	Rutland	Windsor	Vermont
Total Population	61,270	56,416	625,904
White alone	58,961	53,849	588,820
Hispanic or Latino	738	734	9,803
Black or African American alone	295	310	5,964
American Indian alone	128	120	1,693
Asian alone	358	430	7,835
Native Hawaiian & Other Pacific Island alone	0	0	108
Some other race alone	13	7	508
Two or more races	777	966	11,173

Source: EPS-HDT 2014

Low-income populations in the counties throughout the Overland Segment ROI are shown in ***Table 3-32***. Rutland County accounted for a slightly higher number of individuals and families living at poverty compared to Windsor County and has an overall higher percent of people living in poverty compared to the state of Vermont (***Table 3-33***). The largest low-income population is 20.7 percent in Rutland County census tract 9636.

TABLE 3-32 2013 POVERTY LEVELS FOR RUTLAND AND WINDSOR COUNTIES COMPARED TO VERMONT

Poverty Levels	Counties		State
	Rutland	Windsor	Vermont
People Below Poverty	7,655	5,708	70,873
Families Below Poverty	1,349	983	12,205

Source: EPS-HDT 2014

TABLE 3-33 2013 PERCENT OF LOW-INCOME POPULATION IN THE OVERLAND SEGMENT COMPARED TO VERMONT

Percent of Population Below Poverty Level	Counties		State
	Rutland	Windsor	Vermont
People Below Poverty	13.0%	10.3%	11.8%
Families Below Poverty	8.3%	6.3%	7.6%

Source: EPS-HDT 2014

This Page Intentionally Left Blank

4 ENVIRONMENTAL CONSEQUENCES OF THE NO ACTION ALTERNATIVE

The EIS alternatives analysis includes the No Action Alternative, which serves as a baseline against which the potential effects associated with the DOE's Proposed Action are evaluated (40 CFR Part 1502.14[d]). Under the No Action Alternative, the DOE would not issue a Presidential permit for the proposed NECPL Project to cross the United States border; therefore, no environmental effects associated with the construction and operation of the proposed NECPL Project transmission line, converter, and substation interconnection would occur on the 18 environmental resource areas (see detailed analyses in ***Section*** 5). Some environmental effects may result from taking no action, as follows.

ISO-New England is the independent, not-for-profit company authorized by the Federal Energy Regulatory Commission to perform grid operation, market administration, and power system planning for the region that includes Connecticut, Rhode Island, Massachusetts, Vermont, New Hampshire, and most of Maine (ISO-NE 2014). The ISO-New England's *2014 Regional System Plan* identifies several challenges for maintaining system reliability for the 10-year planning horizon:

- improving resource performance and flexibility;
- maintaining reliability and fuel certainty, given the region's increased reliance on natural-gas-fired capacity and the limited availability of fuels necessary to generate electrical energy;
- planning for the potential retirement of generators; and
- integrating a greater level of intermittent resources (i.e., variable energy resources [VERs]) (ISO-NE 2014).

The energy demand forecasts for ISO-New England anticipate a 10-year growth rate of 1.3 percent a year for the summer peak demand, 0.6 percent a year for the winter peak demand, and 1.0 percent a year for the annual use of electric energy. Although demand is anticipated to grow relatively slowly, the *2014 Regional System Plan* identifies the need for additional reliable capacity and fuel certainty. New England has become an "energy constrained system" due in part to heavy dependence on natural-gas-fired generation and the planned retirement of more than 4,000-MW of resources between June 2014 and June 2017 (ISO-NE 2014). The proposed NECPL Project would help address the needs and future goals identified in the *2014 Regional System Plan.*

Vermont is one of two states in the United States without coal-generated electricity.[33] Approximately 70 percent of Vermont's electricity in 2013 was produced through nuclear power;[34] however, with the recent closure of Vermont Yankee Nuclear Plant in December 2014, Vermont anticipates its future electricity portfolio to contain additional renewable energy sources (***Figure 4-1***[35]).

ISO-New England identified resources that make up the region's installed generating capacity (i.e., MW capability of all generating units, demand resources) and notes the dramatic shift from nuclear, oil, and coal to natural gas as a result of economic and environmental factors. Similarly, the fuels used to produce New England's electric energy have shifted (***Figure 4-1***).

[33] http://instituteforenergyresearch.org/media/state-regs/pdf/Vermont.pdf
[34] http://www.eia.gov/state/?sid=VT
[35] http://www.iso-ne.com/about/what-we-do/key-stats/resource-mix

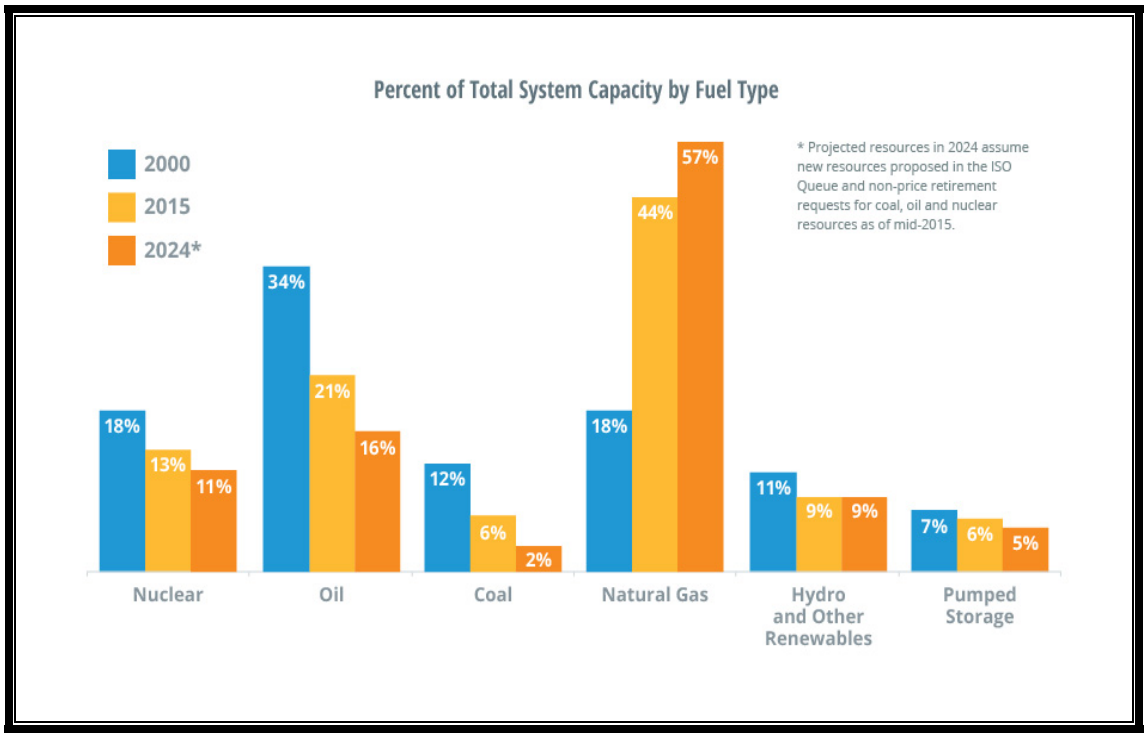

FIGURE 4-1. PERCENT OF FUEL TYPES USED TO PRODUCE NEW ENGLAND'S ELECTIC ENERGY FROM 2000 TO 2024

Foregoing the proposed NECPL Project, the state of Vermont's forecasted energy demand would remain unmet, and energy and transmission development actions would be expected to continue. Purchases of power from other generating sources probably would be required to address the area's electricity needs.

Under the No Action Alternative, it is reasonable to assume that the generating sources in ***Table 4-1*** would continue to provide power (either through existing or future development) to Vermont. Additional generation sources would need to be developed to meet ISO-New England's future energy demand. In turn, implementing programs to increase power generation and expand existing electrical transmission systems would result in associated environmental effects. Without knowing the generation sources and locations within Vermont, neither the effects on particular resources nor the level of effect associated with operation and maintenance can be identified. It is reasonable to assume that environmental effects would be similar to those currently resulting from each power generation method and its associated use of fuel (EPA 2012g as cited in CHPE FEIS 2014).

Under the No Action Alternative, environmental effects related to accommodating current and future electricity demand would continue to occur. Such effects would be associated with the operation, maintenance, and upgrading of existing electrical generation facilities to accommodate current energy needs; replacement of antiquated generation and transmission infrastructure; and construction and expansion of new facilities and transmission systems required to accommodate future increases in electricity demand that could not be met through conservation and demand management (DOE 2014).

TABLE 4-1 2013-2014 ISO-NEW ENGLAND'S VERMONT STATE PROFILE OF ELECTRICAL GENERATION SOURCES

Generation Type	Vermont
Nuclear	65%
Gas/Oil-Fired	14%
Hydro	13%
Wood	6%
Wind	3%

Source: ISO-NE 2015[36]

[36] http://www.iso-ne.com/nwsiss/grid_mkts/key_facts/final_vt_profile_2014.pdf; accessed February 18, 2015

This Page Intentionally Left Blank

5 ENVIRONMENTAL CONSEQUENCES OF THE PROPOSED NECPL PROJECT

5.1 LAKE CHAMPLAIN SEGMENT

5.1.1 LAND USE

5.1.1.1 Effects of Construction

Because the proposed Project would be mostly underwater in the Lake Champlain Segment, most land use plans and policies, which focus on land-based issues, would not apply. The construction phase of the proposed Project in the Lake Champlain Segment would be compatible with surrounding land uses; therefore, it would be consistent with potentially relevant local plans and policies.

Effects on lake use for transportation and recreation purposes are discussed in the transportation and recreation sections of the document. These discussions include potential impacts on recreational boat traffic, commercial boat traffic (such as ferries), and shore-based land uses where the ROI nears the shoreline.

Minimal land-based support would be needed in the Lake Champlain Segment for construction activities; consequently, minimal land use effects are expected from land-based support activities. Transport of the transmission cables would occur via a cable-laying vessel or supply barge, and other equipment, materials, and supplies would be transported to the work site by barges. The land-based support facility for supplying the transmission cable would be located at an existing port with heavy-lift facilities, such as Port Elizabeth, New Jersey. Project activities at Port Elizabeth would be comparable to adjacent land uses. From Port Elizabeth, vessels would transit the Hudson River and the New York State canal system to access Lake Champlain. A small, temporary land storage site (approximately 60,000 square feet) in the Lake Champlain Segment may be required to support the cable installation activities. This site, if needed, would be identified at a later date and is anticipated to be an existing commercial marine facility with docking and storage space.

5.1.1.2 Effects of Operations Maintenance, and Emergency Repairs

No effects on land use in the Lake Champlain Segment would be expected from operation, maintenance, and emergency repairs. The design of the Project route in this segment avoids designated anchorage areas; therefore, no effect would be expected.

Maintenance activities, such as cable inspections by vessel-towed equipment, would be expected to occur intermittently throughout the life of the transmission cable and to have a minimally disruptive effect on commercial and recreational use of the lake. Likewise, emergency repairs of the transmission cable may become necessary, but the effects of these actions on recreational and commercial land uses would be temporary and localized.

5.1.2 TRANSPORTATION AND TRAFFIC

5.1.2.1 Effects of Construction

TDI-NE proposes to hire a fleet of approximately four vessels (i.e., cable-laying vessel, survey boat, crew boat, and tugboat or tow boat) to coordinate cable installation. Installing the transmission cable would result in additional vessel traffic on Lake Champlain, which could create minor navigational obstacles (e.g., temporary loss of use of waterway portions) for commercial and recreational vessels using the lake. These effects are anticipated to occur for less than 30 days and would be limited to the

immediate area of cable-laying activity (TDI-NE 2014a). The construction effects on transportation within the Lake Champlain Segment would be similar to those described in the CHPE FEIS because the technology would be the same (DOE 2014). Effects particular to the Vermont side of Lake Champlain are discussed herein.

Approximately 1 to 8 miles of transmission cable can be installed per day in an aquatic environment; therefore, the work site would move where the cable is being installed and would be closed to other vessels. The presence of cable installation vessels could disrupt (i.e., delay, temporarily cancel, or change) commercial ferry operations on Lake Champlain, including the LCTC and the Fort Ticonderoga Ferry Company. The transmission cable would cross under the Ticonderoga-Larrabee Point Ferry cable ferry crossing in Lake Champlain (approximately MP 88). The cable ferry guidance cables would be removed from the lakebed temporarily prior to installing the transmission cables and re-installed following cable installation. Because ferry chains are replaced every 4 years, it may be possible to co-schedule the transmission cable installation with the ferry cable replacement. To minimize ferry service disruption, installing transmission cables would be coordinated with ferry operators (TDI-NE 2014a).

Transporting materials from Port Elizabeth, New Jersey to Lake Champlain would result in short-term effects on commercial and recreational uses in the Champlain Canal because HVDC cables would be delivered via barges designed to fit within the canal system. These barges could cause temporary delays/disruptions (i.e., cancellations or other changes) of commercial and recreational boating traffic in the area. The construction would be coordinated with the New York State Canal Corporation to avoid or minimize effects on commercial and recreational use of the canal system and on seasonal events in the canal (TDI-NE 2014a). Any potential disturbance of recreational and commercial uses would be temporary and limited to the work site (TDI-NE 2014a).

Construction of the Lake Champlain Segment would occur over a five month period, between June 1 to November 1; although, installation could occur in southern Lake Champlain from October 1 to December 31, if needed (TDI-NE 2015) to avoid potentially icy conditions on Lake Champlain. The grapnel run (which would take 30 days) would be performed during the construction season (June 1-November 1) one year prior to installing the cables (TDI-NE 2015). Construction would be coordinated with the USACE and USCG to avoid affecting navigation aids such as buoys and signs for boaters. An Aquatic Safety and Communications Plan would be provided to the USCG, local waterway users, and stakeholders, and other potentially interested parties would be notified of transmission cable installation activities (TDI-NE 2014a).

Transmission cables would not interfere with any federal navigation channels or anchorage areas. The navigational effects due to HDD in the lake may result from the presence of the barges and cofferdams, if cofferdams are used. In the event cofferdams are used in Benson and Alburgh, they are likely to remain in place for approximately three months. The transitional HDDs would be initiated from land. The drilling rig would be set up on TDI-NE controlled land and the pilot bore would be drilled from the land into the lake. The reaming bore would then be pulled from the lake back to the land location. The conduits would be located on the barge and would be pulled into the drill hole behind the back reamer. It is not anticipated that the conduits would be floated on the lake surface.

Minimal land-based support would be required to resupply cable-laying vessels. A small, temporary, land-based staging area (approximately 60,000 square feet) in the Lake Champlain Segment may be required to support cable-installation activities. If necessary, this site would be identified by TDI-NE's marine contractor. Although trucks would supplement the land-based staging area, truck transport would be minimal and would not affect traffic flow on roadways. Because the proposed use of the port

facility would be similar to its current use, the difference in port traffic at the site resulting from Project construction would be minimal (TDI-NE 2014a).

Profile drawings would depict locations of existing marinas. Marina owners and operators would be given advance notice of cable-laying in their area of the lake and offered an opportunity to voice any concerns with the contractor. Upon completing the cable installation, TDI-NE proposes to provide the cable route as-built information to the National Oceanic and Atmospheric Administration (NOAA) for their use in developing nautical charts.

5.1.2.2 Effects of Operations, Maintenance, and Emergency Repairs

The location of the transmission cable would be marked on navigation charts. The proposed Project route within the Lake Champlain Segment was designed to avoid anchorage areas; therefore, limits on vessel anchorage would not be required.

The likelihood of anchor snags associated with transmission cable operation would be insignificant. Transmission cables would be buried to the prescribed depths, which would mitigate the potential for vessel anchors hooking onto the transmission cable and damaging the vessels or the transmission cable. Anchors could become snagged on the concrete mats used to cover portions of the transmission cable that could not be buried. The total area over which concrete mats would be used to cover the transmission cable represents less than 0.001 percent of the acreage of the Lake Champlain Segment; therefore, effects on vessels or vessel anchors would be minimal. In addition, the water depth in those areas would be greater than the length of the anchor chains used by most vessels currently operating on Lake Champlain. If an anchor snag occurs, the vessel crew would notify the USCG and TDI-NE, and TDI-NE would repair the cables (if necessary), transport a new anchor to the barge, cut the snagged anchor chain, and recover the snagged anchor, if possible. If an Anchor Snag Manual is required, TDI-NE, would develop the manual in coordination with appropriate stakeholders and the manual would identify appropriate protocols, such as those described above, for addressing anchor snags. The proposed manual would include a navigation risk assessment discussing anticipated effects on current and future commercial vessels. Prior to construction, the USCG would review the Anchor Snag Manual and the associated navigation risk assessment.

The effects of magnetic properties of the transmission cable on mechanical navigational compass readings would be insignificant (Exponent 2014a). For cables buried at 3 feet and strapped together, the maximum deviance from magnetic north at 19 feet above the water would be an estimated 2.9 degrees directly over the cables and an estimated 1.6 degrees at approximately 10 feet east or west from the cables. The deviance from magnetic north would be reduced to 0 at a distance of 50 feet from the cables. This effect is likely to be limited to the upper (north of MP 12) and lower (south of MP 68) reaches of Lake Champlain, where the proposed transmission cable would be buried in waters less than 50 feet deep. The calculated deviance would be less where the cables are installed in deeper water (TDI-NE 2014a).

Visible parts of the transmission cables, including the concrete mats, landfall, and near-shore protection would be inspected at least every 5 years to ensure cable integrity. Inspections would be performed from watercraft, and the transmission cables would be accessed either by divers or remotely operated vehicles (ROVs). This would result in a negligible amount of additional intermittent vessel traffic on Lake Champlain for the life of the Project.

Spot checks of the transmission cable protection materials would be performed during or after the first year of operation. Spot checks could occur more frequently at locations where strong currents are expected or where abnormalities are identified. Inspection of the transmission cables would not limit

water-dependent recreation or commercial activity because vessels could either traverse around the inspection vessel or use a different part of the lake. Any disturbances of recreational and commercial uses would be temporary and limited to the vicinity of the inspection vessel. Inspection of the aquatic transmission system would not disrupt normal operations in Lake Champlain (TDI-NE 2014a).

The presence of work barges and other vessels required to complete any emergency repairs would temporarily affect commercial and recreational uses of Lake Champlain. Although the frequency of emergency repairs cannot be estimated, repair time would most likely be less than 30 days, and most repair activities would be limited to the immediate vicinity of the repair site. If the transmission cables were to be damaged at or near the existing ferry cable or utility infrastructure, these uses could be disrupted during emergency repair activities.

A project-specific Emergency Repair and Response Plan (ERRP) would be implemented if an emergency were to occur. The ERRP would be developed after the design is completed and would outline procedures for emergency repairs and identify the qualified contractors who could perform them, as well as discuss activities, methods, and equipment required to repair the transmission system, including the procedures to minimize effects on the environment. TDI-NE would be responsible for ice-breaking operations and coordination with seasonal locks and canals, if required for emergency repairs. Disruptions of the transportation system due to emergency repairs, if any, would be insignificant (TDI-NE 2014a).

5.1.3 WATER RESOURCES AND QUALITY

5.1.3.1 Effects of Construction

Surface Water and Water Quality

Installing the transmission cable in or on the lake bottom of Lake Champlain would result in temporary, local effects on water quality during construction. Cable installation and construction within Lake Champlain and other surface waters along the proposed Project route would require Section 404 and Section 10 permits from USACE. TDI-NE submitted the draft application to USACE in 2014 (***Appendix E***) and supplemented the application in 2015.

Between the United States and Canadian border at approximately MP 74, the aquatic transmission cables would be installed within the lakebed sediment at a depth of approximately 4 feet using jet plowing. This would cause temporary increases in turbidity as a result of the resuspension of sediments from trenching and disturbance of the lakebed. Shear plowing would be used to bury the transmission cable at depths of 3 to 5 feet south of MP 74, where Lake Champlain is shallower and narrower. Shear plowing results in less sediment resuspension and dispersion compared to jet plowing. At water depths greater than 150 feet, the cables would be laid on the lakebed and allowed to self-bury.

Turbidity is a measure of the concentration of TSS in the water. Increased turbidity in a water body may result in reduced light levels in aquatic habitats and temporary changes in water chemistry (e.g., pH, dissolved oxygen). Reduced light levels may cause decreased production of oxygen by photosynthetic organisms, or sedimentation may cause increased biological oxygen demand (BOD); either mechanism could result in reduced concentrations of dissolved oxygen in construction areas. Fish and other mobile aquatic organisms would be expected to avoid the construction area; however, changes in water chemistry may affect less mobile organisms in the short term.

The HDD process would be used to install the transmission cable at the transition point from water to land or land to water. The HDD drill head would be steered through the receiver casings to the cable-laying barge. Suspended sediment and turbid water would be pumped out of the receiver casings into

holding tanks on the barge and disposed of according to state and federal requirements. An alternative to the guide casing would be to use a cofferdam. The area inside the cofferdam would be dredged to create a pit at the end of the HDD conduit to allow the cable to be pulled into the conduit. This dredging may result in the suspension of sediment that would be contained within the cofferdam area. Material dredged during the cable installation process would be stored on a barge temporarily and disposed of as allowed under existing state and federal requirements. The cofferdam would remain in place throughout the HDD operation to minimize leaks of drilling fluid into the lake.

Drilling fluid containing bentonite clay could leak during the HDD process; the suspension or dispersion of drilling fluid in Lake Champlain or sediments may affect water quality on a local and temporary basis. TDI-NE intends to use only water as the drilling fluid for the last 10 feet of each HDD bore into the lake to reduce the likelihood of introducing even a very small quantity of bentonite into the lake. The previously developed Horizontal Directional Drilling Inadvertent Return Contingency Plan and Spill Prevention, Control, and Countermeasures (SPCC) Plan would be updated by the contractor prior to construction.

During HDD operations, a visual and operational monitoring program would be in place to detect any losses of drilling fluid. The program would involve visual observations in the surface water at the drill exit point and monitoring the drilling fluid volume and pressure within the borehole. If drilling fluid in the water or excessive loss of volume or pressure in the borehole are observed, the HDD operator would halt drilling activities and initiate cleanup of the leaked fluid. A barge with a pumping system would be located at the cofferdam to collect any drilling fluid released into the cofferdam enclosure. All collected drilling fluids would be disposed of at a permitted facility.

Water quality modeling was conducted to assess the potential effects of resuspension and dispersion of lake sediments and other constituents during the cable installation process using both jet plowing and shear plowing. A three-dimensional hydrodynamic and water quality model of Lake Champlain was developed using the Danish Hydraulic Institute's MIKE3 water quality model (HDR 2014b). The modeling focused on five representative locations along the entire proposed cable route to simulate the effects of the various drilling and installation methods: one in the northern portion of Lake Champlain (MP 6) that represents jet-plow installation, three in the main lake at deeper depths (MP 20, MP 50, MP 68) to represent jet plowing although laying the cable on the lake bottom is the proposed installation in these sections of the Lake, and one in the southern portion of the lake (MP 83) that represents shear-plow installation. While it is anticipated that cables would be laid on the lake bottom to allow for self-burial in deeper waters (greater than 150 feet), jet-plow installation was assumed in these locations in order to provide a conservative estimate of effects on water quality because jet plowing causes resuspension of more sediment than bottom laying. The simulation period for jet plowing was the summer (July and August), and the simulation period for shear plowing was the fall (September), but the results are not expected to be significantly different at other times of the year. Cable installation is not a source of new sediment or contaminants in the lake, rather it causes short-term resuspension of existing sediment.

The model simulated the dispersion of TSS, particulate phosphorus, DP (***Table 5-1***), and eight heavy metals (arsenic, cadmium, copper, lead, nickel, zinc, silver, mercury). The model results for particulate phosphorus and DP were summed for comparison to the VWQS for TP (HDR 2014b). Dissolved phosphorus was evaluated because it is the form more readily available to algae. Excessive levels of nutrients such as phosphorus can cause a rapid increase in the amount of algae in a water body, which is known as an algal bloom. An algal bloom can negatively affect water chemistry and aquatic organisms by reducing sunlight and depleting dissolved oxygen levels as the organic matter decomposes.

At all five representative locations, the modeled TSS distribution indicates that the highest concentrations would occur near the point of installation and that concentrations would decrease rapidly with increasing distance from the installation point (HDR 2014b). At the point of cable installation of the four northern and central lake locations, modeled TSS increased to 1,200 to 1,700 mg/l within 1 hour, followed by a rapid decrease to background levels within 1 to 3 hours. At the southernmost site (MP 83), modeled TSS increased to only 35 mg/l. At a lateral distance of 200 feet from the point of installation and within 3 to 9 feet of the lake bottom, the modeled TSS concentration increased less than 3 mg/l above background TSS levels (HDR 2014b). For comparison, the average TSS level in Lake Champlain was 2.6 mg/l (range 0.1 to 177 mg/l) from 1992 to 2005.

TABLE 5-1 SUMMARY OF MODELED WATER QUALITY PARAMETERS AS A RESULT OF CABLE INSTALLATION IN LAKE CHAMPLAIN

Milepoint	Total Suspended Solids		Total Phosphorus		Dissolved Phosphorus	
	Approximate Maximum Concentration (mg/L)	Time to Return to Average Levels (hours)	Approximate Maximum Concentration (µg/L)	Time to Return to Average Levels (hours)	Approximate Maximum Concentration (µg/L)	Time to Return to Average Levels (hours)
MP6	1,200	<2	2,300	<2	15	<3
MP20	1,700	<3	3,000	<3	22	<4
MP50	1,400	<3	3,200	<4	8	<4
MP68	1,500	<2	4,100	<5	15	<5
MP83	35	<1	45	<1	1	<2
Average (Range)[1]	2.6 (0.1 - 177)[a]		20 (10 - 60)[b]		11 (2 - 68)[b]	

[1] Average range of background levels in Lake Champlain from 1992 to 2005.
[a]Based on 1992-2005 VDEC long-term monitoring data.
[b]Based on 1992-2013 VDEC long-term monitoring data.

The modeled increase in TP concentration was greatest at the point of cable installation and decreased rapidly to less than 10 µg/l within 200 feet of the installation point and within 3 to 9 feet of the lake bottom (HDR 2014b). At the northern and main lake simulation locations (MP6, MP20, MP50, MP68), modeled TP temporarily increased to 2,300 and up to 4,100 µg/l and then decreased to less than 10 µg/l above background levels within 1 to 4 hours. At MP 83, TP increased to 45 µg/l and decreased to background levels in less than 30 minutes. As a result of the cable installation, modeled DP increased to 1 and up to 22 µg/l followed by a decrease to below 10 µg/l above the background level within 1 to 3 hours (HDR 2014b). Based on VDEC's long-term monitoring data from 1992 to 2013, the annual average TP and DP in Lake Champlain are 20 µg/l (range 10 to 60 µg/l) and 11 µg/l (range 2 to 68 µg/l), respectively. The VWQS for phosphorus in Lake Champlain represents the annual mean in the photosynthetic zone; thus, a short-term increase in TP resulting from cable installation would not significantly influence the annual mean. The expected construction time window for the HDD operations using jet-plowing in the northern and central portions of the lake is May 1 to September 15. These locations correspond to the deepest areas of the lake and are well below the surface layer and photosynthetic zone; therefore, the temporary resuspension of phosphorus is not anticipated to increase algal production.

Results of the water quality modeling indicate that the reintroduction of sediment caused by the transmission cable installation represents less than 0.01 percent of the total external annual phosphorus

input to Lake Champlain (HDR 2014b). Also, the potential short-term increase in DP ranges from 3 to 9 µg/l in the surface layer (HDR 2014b). This estimate is conservative because it assumes that all DP resuspended from the sediment is completely transferred to the surface layer or photic zone where most photosynthesis occurs; however, stratification of Lake Champlain in summer would limit or prevent mixing between the surface and deeper layers of the lake. Because changes in TP and DP are predicted not to stimulate algal growth, installation of the transmission cable would not affect the dissolved oxygen content of the surface layer of Lake Champlain.

Aquatic life criteria consider the acute (i.e., short-term exposure) and chronic (i.e., long-term exposure) toxicity of metals. Due to the short duration of the proposed cable installation process and the transient nature of resuspended sediment, the proposed cable installation would be more likely to affect acute toxicity than chronic toxicity. The modeled concentration increases of the eight metals at the five representative locations throughout Lake Champlain were all less than the applicable acute and chronic VWQS (HDR 2014b). The metal concentrations resulting from resuspension of sediment would comply with applicable VWQS.

TDI-NE proposed measures to avoid and minimize effects on water quality, including BMPs. These measures include having an environmental inspector on site during construction and restoration activities, monitoring turbidity in real time during construction, preparing a stormwater pollution prevention plan, implementing erosion control plans, and restoring vegetation cover.

Floodplains

FEMA classified Lake Champlain as a 100-year floodplain with an established base flood elevation. Although the transmission cables would be located in the floodplain within Lake Champlain, Alburgh, Vermont, and Benson, Vermont, the transmission cables would be buried in or would lay on the lakebed. The installation and burial of the transmission cables would have no effect on current use of the property. The construction of the proposed Project is not expected to affect flood flows or storage.

Groundwater

The construction activities associated with installing the transmission cable are not expected to affect groundwater because the area to be disturbed is beneath Lake Champlain, where there are no groundwater uses.

5.1.3.2 Effects of Operations, Maintenance, and Emergency Repairs

The transmission of electric energy generates heat that can dissipate into the environment and increase the temperature of the surface of a transmission cable and the environment surrounding the cable. The potential increase in the temperature of water and sediment caused by operation of the proposed transmission cable at its maximum load was modeled using the multi-physics simulation software STAR-CCM+, Version 9, for three scenarios representing the proposed installation options (i.e., trench installation using jet-plow or shear-plow techniques, self-burial of cables, or laying cables on bedrock) (Exponent 2014b). The results were compared with the VWQS for coldwater fish habitat, which state that the increase in water temperature resulting from an activity shall not exceed 1°F (VDEC 2014c). For the trench installation scenario, the temperature is predicted to increase 0.9°F at the water/sediment surface immediately above the transmission cables. For the self-burial and bedrock installation configurations, temperature may increase more than 1°F temporarily in limited regions (1 to 2.8 feet horizontally and up to 5.5 inches vertically). The potential warm zones correspond to less than 0.000002 percent of the volume of Lake Champlain (Exponent 2014b). The water temperature changes resulting from operation of the proposed Project would be within the normal seasonal range of temperature variability in Lake Champlain; therefore, the operation of the transmission cable would have no significant effect on water temperature throughout the lifespan of the proposed Project.

Inspection activities would be non-intrusive and would have no adverse effects on water quality or resources. During potential emergency repair activities, the cable would have to be exposed and pulled up onto a repair barge. A repair section would be spliced in, and the repaired cable would be lowered to the bottom and reburied. Effects on water quality would include local increases in turbidity and resuspension of sediments. Although the frequency of emergency repairs cannot be predicted, and the repair time would vary, repairs would be relatively brief (less than 30 days) and effects would be limited to the immediate vicinity of the repair site. The effects would be similar to those of original installation, but the duration would be shorter, and the affected area would be smaller; an ERRP would be developed before beginning operation of the proposed Project.

5.1.4 AQUATIC HABITATS AND SPECIES

5.1.4.1 Effects of Construction

Four construction techniques would be used to install transmission cables in the Lake Champlain Segment: HDD, divers, jet plowing, and shear plowing. Transmission cables would enter the lake near Alburgh, Vermont, (MP 0.5 to MP 1.1) via HDD to the VFWD's Korean War Veterans Access Area off of US Route 2 in Alburgh, Vermont. A second HDD would extend from the Access Area approximately 0.2 miles in a southwesterly direction to an exit point in the Lake where water is deep enough for one of the other installation methods. From MP 1.3 to MP 22, where waters are predominately less than 150 feet deep, jet plowing would be used to install cables. In waters deeper than 150 feet (i.e., MP 22 to MP 66) the transmission cables would be laid on the lake bottom to allow for self-burial where the cables would not cross utilities or bedrock. Jet plowing would resume from MP 66 to MP 74, at which point transmission cables would be installed by shear plowing until MP 98, followed by HDD for the transition from water to land near Benson, Vermont. ***Section 2.4.3*** provides construction techniques for HDD installation, and ***Section 2.4.7.1*** provides details about jet plowing and shear plowing.

Prior to installing the transmission cable, the aquatic route would be cleared of debris (e.g., logs, out-of-service cables, abandoned moorings, and other anthropogenic waste) by towing a grapnel through the area. The grapnel would be towed by a small tug or barge, and debris would be disposed in accordance with applicable state and local regulations and requirements. Benthic invertebrates and demersal fish species may be displaced temporarily during the debris clearing activities and immobile species in the direct path of the grapnel may be injured or killed.

In two areas where HDD installation is proposed, the directional drill would exit the lakebed at a sufficient depth to avoid affecting littoral zone habitat. An estimated 100 cubic yards of drill cuttings (including both used bentonite and soil) from each site would be disturbed and removed for appropriate disposal. A receiver casing would occupy an area of 12.6 square feet and approximately 33 cubic yards of sediment would be impacted. A temporary cofferdam would be constructed with sheet-steel piles at the exit-hole. Depending on sediment composition, approximately 107 to 142 cubic yards of sediment would be excavated from within the cofferdam and removed for appropriate disposal. Upon completion of installation activities, the cofferdam would be removed, the exit pit backfilled with clean sand or excavated materials if they do not contain any hazardous materials, and the HDD staging area restored to pre-construction conditions to the extent practicable.

A dynamic positioning cable-laying ship would be used to tow plows, eliminating the effects of anchors on the lakebed. Jet plowing and shear plowing would directly affect a lakebed area of approximately 15 feet wide; sediment disturbances would extend 15 feet on either side of the plow, for a total affected area 45 feet wide centered at the cables. Overall, installation of the transmission cables could temporarily disturb up to 550 acres of the Lake Champlain lakebed. The primary effect of disturbing

the sediment associated with the aquatic installation would be displacement of benthic and demersal species. Usually, such trenches refill completely in 6 months to 5 years, depending on the soil type and water currents (ISE 2003).

Concentrations of TSS were estimated for jet plowing (HDR 2014b). Very conservative assumptions were used in modeling, and estimated concentrations were based on a location directly above the installation at a single point in time. Model assumptions were based upon jet plowing because jet plowing generally releases more sediment than shear plowing. The concentration of TSS would be expected to increase in the lower 9 feet of the water column due to jet plowing; the estimated concentration would be less than 200 mg/l directly over the installation point, 100 mg/l at approximately 50 to100 feet from the installation point, and less than 3 mg/l above background levels (range from 0.1 to 177 mg/l) at 200 feet from the point of installation (HDR 2014b). Depending on location, background levels of TSS would be achieved in 1 to 4 hours following cessation of the plowing activities (HDR 2014b). Mobile organisms, such as fish, would be likely to avoid the area of elevated TSS, and no population-level effects on non-mobile organisms are expected due to the short exposure time to elevated TSS concentrations and because those organisms (primarily shellfish and benthic macroinvertebrates) have populations distributed over a major portion of the lake bottom and the affected area would represent only a small fraction of the whole population.

No contaminants are expected to exceed VWQS as a result of installing the proposed transmission cable. HDR (2014b) simulated 10 common contaminants (arsenic, cadmium, copper, lead, nickel, zinc, silver, mercury, DP, and particulate phosphorous) during installation by jet plowing and shear plowing at five representative locations along the Lake Champlain Segment of the proposed transmission cable route. Measured sediment concentrations of eight metals (arsenic, cadmium, copper, lead, nickel, zinc, silver, and mercury) were all less than VWQS acute and chronic values along the length of the aquatic cable route (i.e., at the five representative locations); therefore, any resuspension of these contaminants into the water column would comply with the VWQS. The concentration of methylmercury is not expected to increase as a result of installation activities because the bacteria responsible for methylating inorganic mercury usually occur in the top 2.3 inches of lake sediment (Exponent 2014b); however, the contaminant would be displaced with sediments during plowing activities.

No minor releases of hydrocarbons are anticipated; however, if they occur, spill remediation would be undertaken in accordance with the Project's ERRP and BMPs. Hydrocarbon releases (e.g., diesel fuel, lubricants, and hydraulic fluids) that are not contained would be expected to remain on the surface and disperse rapidly. NOAA (2006) indicated that small spills of diesel fuel (500 to 5,000 gallons) evaporate and disperse in 1 day or less. HDD installation at the shoreline could result in spilling drill fluid into the water. A contingency plan that would allow for timely cleanup of any hydraulic fluid or fuel leaks that may occur would be developed prior to commencement of construction activities to ensure minimal effect on the environment.

Aquatic Habitat and Vegetation

Disruption of bottom sediments during installation activities would affect SAV and related habitat along the Lake Champlain Segment. Direct effects on SAV in the northern portion of the aquatic transmission cable route (approximately MP 1 to MP 74) would be limited because most of the route is in waters deeper than those in which SAV normally grow (DOE 2014). In shallower areas confined to the shoreline access point and along the southern portion of the aquatic transmission cable route (MP 74 to MP 98), where SAV is more abundant, vegetation within the direct path of the transmission cable would be subjected to uprooting, removal, crushing, or injury.

The disturbed sediment and increases in TSS are not likely to cause temporary reduction in growth and primary production due to reduced light penetration and TSS concentrations are expected to return to

ambient levels within a few hours following completion of plowing (HDR 2014b). At all five of the water quality modeling sites, modeled peak TSS concentrations were reached within approximately 30 minutes following cable installation. Concentrations rapidly decreased and returned to background levels in less than approximately 3.5 hours from the time of cable installation (HRD 2014b). Settling of suspended sediment following the disturbance could bury or suffocate some aquatic plants in the vicinity of the installation activities; however, these effects would be restricted to the immediate vicinity of the cable-laying route, and the plant communities are expected to re-establish themselves following the completion of construction. Regarding aquatic invasive species, TDI-NE developed an invasive species control plan to mitigate the spread of invasives into the lake during Project construction. This plan has been reviewed by the VANR.

Accidental release of hydrocarbons could affect aquatic vegetation through physical coating of the plants or toxic chemical effects. No significant adverse effects due to release of hydrocarbons are anticipated because any spills would be expected to dissipate rapidly, particularly in areas with flowing water.

Shellfish and Benthic Communities

Shellfish and benthic communities in the direct path of the Lake Champlain Segment of the proposed transmission cable route would be subject to mortality and/or injury during debris clearing prior to installation and during plowing to install the transmission cable. The affected area would be restricted to the footprint of the grapnel and jet or shear plow. The affected area for mussels would be confined to depths less than 30 feet because mussels are generally absent from areas greater than 30 feet deep. The 2014 mussel survey along the aquatic portion of the transmission cable route indicated that invasive zebra mussel is the dominant species in shellfish communities; effects on native mussel species are expected to be minimal because native mussel populations are generally low and widely dispersed.

Where bedrock is near the surface in waters of less than 150 feet, making burial of the transmission cables impractical, concrete mats would be installed to protect the transmission cables and limit heat transfer during operation. Concrete mats would likely smother benthic invertebrates and shellfish in the immediate footprint of the mats; however, organisms may recolonize interstitial spaces in the concrete mats eventually. Approximately 4 percent of the lake route (about 2.5 acres) would be covered with concrete mats; therefore, no significant adverse effects on benthic communities are anticipated as this represents a very minor portion of the entire lakebed.

Increases in TSS at lateral distances of 50 to 100 feet from installation are expected to remain below 100 mg/l, and turbidity is expected to return to ambient conditions rapidly; consequently, increased turbidity is not expected to affect benthic communities significantly. Filter feeders (animals that feed by straining suspended matter and food particles from water through their digestive systems) in the immediate vicinity of the transmission cable-laying activities may be affected temporarily, but no long-term adverse effects are expected.

Settling of disturbed sediments and bottom currents are expected to return the Lake Champlain lakebed contour to pre-construction conditions, thereby allowing benthic communities to re-establish themselves following the disturbance. Recovery to a mature community may take several months to 5 years (Normandeau 2012).

Effects due to releases of hydrocarbons would depend on the magnitude, timeframe, and location of the spills. In deeper areas, minor hydrocarbon releases would be unlikely to affect benthic communities. In shallower areas, small releases may have minor effects on benthic resources; however, the ERRP and BMPs would be implemented immediately upon identification of a spill to limit biological effects.

Fish

In general, temporary increases in TSS, reduction in prey items, noise and lights, and releases of hydrocarbons associated with construction activity could affect fishes in Lake Champlain. Sediment suspension and settlement resulting from plowing are not expected to affect Lake Champlain fish populations significantly.

The construction schedule for the aquatic transmission cable encompasses the spring spawning season for many of the species common to Lake Champlain. The northern lake segment (MP 1 to MP 74) would be installed between May 1 and September 15, and the southern portion (MP 74 to MP 98) would be installed from approximately September 15 to December 31. Most resident species spawn during spring in near-shore or shallow areas; therefore, effects on spawning would be restricted to the near-shore areas of the northern segment of the route, which represents a small portion of the overall transmission cable route. Migratory species that move to tributaries for spawning are not expected to be significantly adversely affected.

Although sensitivity to increased TSS is species-specific, in general, larvae are more sensitive to suspended sediment than eggs, juveniles, or adults (DOE 2014). Adult and juvenile fish would avoid the areas of elevated TSS during installation; however, larvae and eggs in the vicinity of the installation activities may be exposed to the elevated TSS temporarily. Larvae affected by the increased turbidity may exhibit reduced growth rates and increased mortalities, and eggs may sink and become smothered, but these effects are not expected to result in adverse population-level effects. Biological and physiological effects on juvenile and adult fish due to elevated turbidity may include abrasion of gill membranes resulting in reduced ability to absorb oxygen, decreased dissolved oxygen concentrations in the surrounding waters, decreased visual response, and reduced growth rate. Behavioral responses of fish to increased concentrations of suspended sediment include impaired feeding, impaired ability to avoid predators, and reduced or relocated breeding activity. Because the area affected by increased turbidity is relatively small compared to the total area of Lake Champlain, and elevated TSS levels are predicted to return to pre-construction levels within hours of completion of the plowing activities, no significant effects are anticipated due to sediment suspension. For some species whose breeding season covers a broad range of dates with multiple cohorts (e.g., centrarchidae), effects would be brief, and any adverse effect on eggs and larval stages would be small.

Settling of suspended sediment following installation could smother eggs laid prior to installation, may smother larvae, and may reduce benthic prey items in the immediate vicinity of the transmission cable route. The transmission cable route represents only a small portion of the overall lake habitat; therefore, ample forage habitat would remain available for juveniles and adults. Increased contaminant concentrations in the water due to installation are expected to remain below VWQS acute and chronic values, and methylmercury levels are not anticipated to increase; therefore, no long-term adverse effects on fish populations are anticipated due to installation activities.

Effects due to releases of hydrocarbons would depend on the magnitude, timing, and location of any such spills. Accidental spills could affect fish due to either the physical nature of the fuel (coating and smothering) or its chemical components (toxic effects and bioaccumulation). Oil has the potential to affect spawning success because of physical smothering and the toxic effects on eggs and larvae (FWS 2010). Minor releases of hydrocarbons could affect benthic food sources; however, the ERRP and BMPs would be implemented immediately upon identification of a spill to limit biological effects.

Noise generated during installation of the Lake Champlain Segment, mainly due to operation of vessels, would be transmitted through both the air and water; no blasting is planned. Four vessels would be used during the aquatic transmission cable installation: cable-laying vessel, survey boat, crew boat, and tugboat with barge. The dominant source of vessel noise is typically propeller cavitation; other

sources include propeller singing, propulsion, auxiliaries, water dragging along the hull, and bubbles breaking in the wake (Richardson et al. 1995). Vessel noise is a combination of narrow-band (tonal) and broadband sound; tones typically dominate up to 50 Hz, and broadband sounds extend up to 100 kHz (Richardson et al. 1995). Broadband signals from small ships (200 to 300 feet long) have been estimated to be in the range of 150 to 180 dB re 1 µPa at approximately 3 feet and to dissipate rapidly with distance from the source (Richardson et al. 1995). The aquatic transmission cables would traverse the Ticonderoga-Larrabee Point Ferry route; therefore, noise generated by the construction vessels would be similar to that generated by other ships and boats that typically occur in the vicinity of the cable route.

The most likely effects on aquatic species may be transient behavioral responses primarily in shallow zones. Transmission cable installation would be limited with respect to space and time; therefore, noise would affect aquatic fauna in any one location for only a few hours. Other potential responses of fish to continuous sound exposure include physiological stress responses; behavioral responses such as startle response, alarm response, and avoidance; lack of response due to masking of acoustic cues; and physical damage to the ear region (Popper and Hastings 2009). Although behavioral responses are anticipated, noise generated during installation is not expected to cause physical injuries or any population-level effects.

Lighting used for safety and identification during installation may affect fish. Depending on species, life stage, and the intensity of the light, some fish may be attracted to (e.g., herring species) or repelled by (e.g., rainbow smelt, walleye, American eel) the construction light. Species and life stages that depend on the natural daily light cycle for biological processes, mainly larvae, may be temporarily miscued. The cable-laying barge would progress at rate of approximately 1 to 8 miles a day, so any temporary light illumination of waters around the work equipment would be of short duration in any given location, which would reduce any adverse effects of lighting.

Essential Fish Habitat

No EFH would be adversely affected because no EFH is designated within the Lake Champlain Segment.

5.1.4.2 Effects of Operations, Maintenance, and Emergency Repairs

Aquatic species in the Lake Champlain Segment could be affected by the local magnetic fields and increases in temperature generated during operation of the underwater transmission cables. Although the electric field generated by operation of the transmission cables would be wholly contained below the sediment surface by the metallic sheaths that encase the cables, movement of electric charges through a static magnetic field induces an electric field that could affect fishes swimming in proximity to the cables.

Any potential magnetic field effects on aquatic species would be restricted to a very small area of the available habitat in Lake Champlain. Exponent (2014a) recently calculated the strength of the magnetic field due to operation of the underwater cables, taking into account the ambient geomagnetic field (535.4 mG), for two different burial scenarios: the trench case, which represents 54 percent of the route where transmission cables would be buried at least 3 to 5 feet below the sediment surface; and the bedrock configuration, which represents approximately 4 percent of the total underwater cable route where burial is not practical, and the cables would be laid on top of the sediment. Exponent determined that the effect of cable operation on the geomagnetic field would be limited to the area immediately surrounding the transmission cables and would decrease rapidly with distance from the centerline. At 10 feet from the centerline of the cables, the magnetic field deviation would be less than 10 percent of the ambient field, and it would drop to approximately 1 percent at 25 feet from the cables.

Increases in temperature associated with the operation of the transmission cables at the sediment-water interface theoretically could affect demersal species; however, the anticipated temperature increases of the sediment and water column would not significantly affect aquatic species populations because they would fall within the range of natural ambient variability. Exponent (2014b) calculated thermal effects on water quality from operation of the transmission cables in Lake Champlain. The predicted increase in sediment temperature at the sediment surface directly above the transmission cables was estimated to be 1.8°F, assuming burial to a depth of 3 to 5 feet and side-by-side installation of the transmission cables (i.e., no separation), and the predicted temperature change in the water column above the transmission cables was less than 0.01°F. These increases in temperature associated with transmission cable operation fall within the range of normal seasonal variation in ambient lake temperatures (Exponent 2014b). In addition, Exponent estimated that the combined warm zones generated from operation of the transmission cables represents less than 1.9 millionth of a percent of the total volume of Lake Champlain; therefore, the increase in temperature is not expected to significantly increase the activity of mercury methylating bacteria that are typically concentrated in the upper 2 inches of sediment (Exponent 2014b).

No significant effects on aquatic habitats and species are expected to result from maintenance activities because of the short duration of periodic inspections (once every 5 years) and the use of remote sensing equipment. If emergency repairs are required, effects would be similar to those that could occur during initial construction, but they would affect a smaller are and be of shorter duration.

Aquatic Habitat and Vegetation

No effects on aquatic vegetation are anticipated to result from operation of the transmission cables. Most of the transmission cable route would be in offshore waters where SAV is generally absent. Electric and magnetic fields and minimal temperature increases associated with transmission cable operation would not adversely affect vegetation communities because the relative area affected is small and is restricted to the immediate vicinity of the cables.

Shellfish and Benthic Communities

No significant effects on shellfish and benthic communities are expected due to the increases in the magnetic field and ambient temperature associated with operation of the transmission cables. Based on a review of recent research focused on the biological effects of exposure to DC-generated magnetic fields, Exponent (2014a) concluded that changes in the geomagnetic field in the vicinity of the transmission cables would not be harmful to aquatic species on the individual, community, or population levels. Exposure of a marine mussel species (*Mytilus edulis*) to a 37,000-mG magnetic field for seven weeks revealed no increase in mortality and no adverse effects on gonadal tissue (Exponent 2014a). In a study with two freshwater mollusks, the Asiatic clam (*Corbicula fluminea*) and a freshwater snail (*Elimia clavaeformis*), exposure to a 360,000-mG field revealed no observed changes in activity (Cada et al. 2011). The maximum predicted deviation from the magnetic field due to operation of the transmission cable is estimated to be approximately 207 mG in areas where the transmission cable would be buried at a depth of 3 to 5 feet, and up to 4,540 mG where the transmission cable would be laid atop the lakebed; therefore, no increased mortality or adverse physical effects on shellfish are anticipated.

Temperature increases due to operation of the transmission cables are expected to have negligible effects, if any. The maximum increase in temperature due to cable operation (1.8°F) falls within the range of seasonal temperature variation in Lake Champlain; consequently, no adverse effects on shellfish and benthic communities are expected due to the minor increase in temperature.

Fish
Effects of magnetic fields of the strengths generated by the transmission cables would not be significant. The induced electric field would represent a small increase over ambient conditions and would diminish rapidly within a short distance from the cables; therefore, no long-term adverse physiological effects on fish would occur. No observable changes in activity levels or distribution of fathead minnows (*Pimephales promelas*), juvenile sunfish (*Lepomis spp.),* juvenile channel catfish (*Ictalurus punctatus*), and juvenile striped bass (*Morone saxatilis*) were observed in response to static (DC) fields (360,000 mG) using a permanent bar magnet (Cada et al. 2011; Cada et al. 2012).

Considering the typical current velocity in Lake Champlain (4.8 centimeters per second), the induced electric field from the geomagnetic field alone would be approximately 3.7 µV/m directly over the buried cable and would reduce to 2.6 µV/m at a horizontal distance of 10 feet from the centerline of the buried transmission cable (Exponent 2014a). Where the transmission cable would be laid atop the lakebed, the induced electric field would be approximately 23.5 µV/m at a height of 1 foot above the lakebed, directly over the cables; at 10 feet from the cables, the induced electric field would drop below 2.6 µV/m, as in the trench scenario (Exponent 2014a). Aquatic organisms produce weak electric fields that are transmitted through the surrounding water due to Earth's ambient geomagnetic field, and certain species (e.g., elasmobranchs and sturgeons) can detect these fields and use the signals to distinguish prey, conspecifics, and even predators. Lake sturgeon is a state-listed endangered species that may occur in the proposed Project area; potential effects of Project operation on lake sturgeon are discussed separately in ***Section 5.1.5.2***.

Temporary changes in the swimming direction of freshwater eels due to magnetic and induced electric fields generated by operation of underwater transmission cables could affect migration and spawning success (Normandeau et al. 2011; Gill et al. 2012). Freshwater eels in Lake Champlain, however, would not be exposed to magnetic fields for long periods of time because magnetic fields decrease rapidly with distance from the source, and the predicted magnetic fields for the transmission cables are below the thresholds at which behavioral effects have been observed among fish. European eels showed no response in a laboratory study simulating the effect of a 2,000-mG magnetic field from an AC cable at 3 feet. American eels exposed to magnetic fields 10 times greater than the Earth's geomagnetic field for 10 days demonstrated no physiological or behavioral responses (Gill et al. 2012).

The minor temperature increases in the water column due to transmission cable operation would not affect fish significantly. The modeled temperature increases fall within the seasonal range of variation in lake temperatures and, therefore, are not expected to affect Lake Champlain fishes adversely, particularly because the area affected by the temperature increase would be small.

Essential Fish Habitat
No EFH would be adversely affected because no EFH is designated within the Lake Champlain Segment.

5.1.5 AQUATIC PROTECTED AND SENSITIVE SPECIES

5.1.5.1 Effects of Construction

Federally Listed or Protected Aquatic Species
No federally listed aquatic threatened or endangered species are known to occur in the Lake Champlain Segment; therefore, no federally listed aquatic species would be affected by installing the transmission cable as proposed.

State-Listed Species

Fish

Lake sturgeon is the only state-listed fish species that occurs in the Lake Champlain Segment. Individual lake sturgeon dwelling in direct proximity to the transmission cable installation areas could be affected temporarily by sediment disturbance, increases in turbidity and associated water quality degradation, sediment redeposition, noise, and potential accidental releases of hazardous materials, such as hydrocarbons. Effects on state-listed fish species would be insignificant and similar to those described in ***Section 5.1.4.1*** (Aquatic Habitats and Species) for non-listed fish species.

Water quality modeling studies for installation activities in Lake Champlain indicate that TSS increases in the lower 9 feet of the water column due to jet plowing would be less than 200 mg/l directly over the installation point, 100 mg/l at approximately 50 feet to100 feet from the installation point, and less than 3 mg/l greater than background levels (range from 0.1-177 mg/l) at 200 feet from the point of installation (HDR 2014b). Depending on location, background levels of TSS would be achieved within 1 to 4 hours following cessation of the plowing activities (HDR 2014b). In addition, HDR (2014b) simulated the concentrations of 10 common contaminants (arsenic, cadmium, copper, lead, nickel, zinc, silver, mercury, DP, and particulate phosphorous) during installation by jet plow and shear plow at five representative locations along the Lake Champlain Segment of the transmission cable route and determined that no effects on water quality are expected due to increases in contaminant concentrations. Existing sediment concentrations of the eight metals (arsenic, cadmium, copper, lead, nickel, zinc, silver, and mercury) at the five representative locations along the aquatic cable route are all less than VWQS acute and chronic values; therefore, any resuspension of these contaminants into the water column would be within the standards VWQS (HDR 2014b). Any lake sturgeon that may be present in Lake Champlain near the installation activities would be expected to avoid the area where the jet plow or shear plow disturbs the sediments. Benthic food sources for lake sturgeon could be reduced locally and temporarily due to disturbance of approximately 550 acres of lakebed over the 98-mile aquatic cable route. Ample area unaffected by the transmission cable installation would remain available for lake sturgeon foraging because the construction area represents less than approximately 0.2 percent of the available area of Lake Champlain.

The use of concrete mats in areas where burial of the cables is not practical is anticipated for approximately 4 percent (2.5 acres) of the underwater transmission cable route. The addition of these structures may result in minor effects on a very small area of the overall affected habitat; thus, lake sturgeon would be able to use adjacent areas for foraging and other activities. Proposed installation activities in the Lake Champlain Segment are not expected to adversely affect lake sturgeon during its spawning season (May through June) because spawning typically occurs in riverine settings over rubble or larger substrate, where velocities are sufficient to provide clean substrate for egg deposition. The transmission cable would be installed over time. Installation in the northern section of the route (MP 0 to MP 75) would be scheduled for May 1 to September 15, and the southern portion (MP 75 to 98) would be scheduled for September 15 to December 31; therefore, it would not interfere with or present a barrier to lake sturgeon migration into rivers for spawning.

Lake sturgeon that are present in Lake Champlain near the installation activities may be exposed temporarily to noise generated by the vessels used during installation of the transmission cables in the Lake Champlain Segment. As discussed in ***Section 5.1.4.1*** the most likely effects, if any, would be transient behavioral responses. Cable-laying is limited with respect to space and time; therefore, effects of noise on fauna in any one location would persist for only a few hours. Exposure of fish to continuous, long-lasting sound could result in a temporary hearing loss; however, fish generally recover full hearing (Popper and Hastings 2009). Other potential effects of continuous sound exposure include physical damage of the ear region; physiological stress as indicated by increased levels of cortisol and glucose

or behavioral response, such as crowding; behavioral responses (e.g., startle response, alarm response, avoidance); and lack of adaptive response due to masking of acoustic cues. Given that mobile species are expected to avoid the area and the duration of noise would be limited to a few hours, no significant effects due to noise are anticipated.

If minor accidental releases of hydrocarbons should occur, spills would be remediated in accordance with the Project's ERRP and BMPs. Accidental releases (e.g., diesel fuel, lubricants, and hydraulic fluids) that are not contained would be expected to remain on the surface and to disperse rapidly. NOAA (2006) indicates that small diesel fuels spills (500 to 5,000 gallons) evaporate and disperse in 1 day or less. Lake sturgeon is a demersal species; therefore, hydrocarbon releases at the surface during installation activities would not affect this species adversely. Lake sturgeon would be expected to avoid water contaminated with hydrocarbon. Installation at the shoreline using HDD could result in spilling drilling fluid into the water, although this is not anticipated. A contingency plan that would allow for timely cleanup of any hydraulic fluid or fuel leaks that might occur would be developed prior to commencement of construction activities to ensure minimal effect on the environment.

Mussels
None of the state-listed mussels known to have occurred historically within proximity of the proposed Project route (i.e., fragile papershell, giant floater, pink heelsplitter, and pocketbook) were observed during the 2014 mussel survey conducted along the route (HDR 2014a); therefore, effects, if any, on populations of state-listed mussel species would be minor. A limited number of individual mussels could be affected during installation of the underwater transmission cables in the immediate vicinity of the pre-lay grapnel run, plowing, dynamic positioning vessels or mooring locations of the cable barge, and anchor locations of other supporting vessels. No significant effects would be associated with increases in turbidity and the associated water quality degradation, sediment redeposition, and potential accidental releases of hazardous materials. Preferred littoral zone habitat would be avoided during HDD at shoreline approaches. Mussels are not expected to be present in areas where concrete mats protection measures would be placed; these protection measures would be used only in areas where the cables cannot be buried due to existing bedrock or structures, which are not typical mussel habitat.

5.1.5.2 Effects of Operations, Maintenance, and Emergency Repairs

Federally Listed or Protected Aquatic Species
No federally listed aquatic species are known to be present in the Lake Champlain Segment; therefore, no federally listed aquatic species would be affected by operating and maintaining the proposed transmission cable.

State-Listed Species

Fish
The increases in EMFs and temperature generated during operation of the underwater transmission cables would not be expected to affect lake sturgeon in the Lake Champlain Segment because the effects would be restricted to a small area surrounding the transmission cables and would diminish rapidly with distance from the cables. Although the electric field generated by operation of the cables would be wholly contained below the sediment surface because of the metallic sheaths that would cover the cables, movement of electric charges through a static magnetic field induces an electric field that could affect lake sturgeon.

Exponent (2014a) recently calculated the strength of the magnetic field produced by operating underwater cables, accounting for the ambient geomagnetic field, for two different burial scenarios: the trench case, which represents 54 percent of the proposed route (cables would be buried 3 to 5 feet

below the sediment surface), and the bedrock configuration, which represents approximately 2 percent of the total underwater transmission cable route (cables would be laid on top of the sediment). Results indicate that the effect of cable operation on the geomagnetic field would be limited to the area immediately surrounding the cable and would decrease rapidly with distance from the centerline. At 10 feet from the centerline of the cables, the magnetic field deviation would be less than 10 percent of the ambient field; at 25 feet from the cables, it would approximately 1 percent of the ambient field. Any effects on lake sturgeon would be restricted to a very small area of the habitat available in Lake Champlain.

Research on responses of lake sturgeon to EMFs is limited, but Bevelhimer et al. (2013) demonstrated a consistent response of altered swimming behavior when lake sturgeon are exposed to an AC-generated magnetic field. Once lake sturgeon moved away from the influence of the magnetic field, recovery occurred nearly instantly. The researchers concluded that short-term altered swimming responses would not affect the long-term health of a lake sturgeon, but rather the effects would be limited to temporary interruptions of normal movement (Bevelhimer et al. 2013). The effects of the magnetic fields generated by the proposed transmission cables on lake sturgeon, therefore, would be insignificant.

Lake sturgeon have electrosensitive organs that aid in prey detection. Although no previous experiments conducted specifically with lake sturgeon were identified, a recent study demonstrated that Siberian sturgeon (*Acipenser baerii*) respond to an artificially generated 90 µV (peak-to-peak) signal, but not to a signal of 15 µV (Zhang et al. 2012). Although sturgeon may be able to detect the change in electric field directly over the unburied portion of the transmission cables, which Exponent modeled to be 23.5 µV/m at 1 foot above the lakebed, the effect diminishes rapidly with distance from the cables (Exponent 2014a). In addition, only 4 percent of the overall underwater cable route would have cables atop the lakebed; therefore, lake sturgeon would encounter the induced electric field infrequently.

Increases in temperature associated with the operation of the transmission cables at the sediment-water interface would not be expected to affect local lake sturgeon. Exponent (2014b) calculated thermal effects on water quality resulting from operation of the cables in Lake Champlain. Assuming burial to a depth of 3 to 5 feet and side-by-side installation of the cable (i.e., no separation), the increase in temperature at the sediment surface directly above the transmission cables is predicted to be 1.8°F, and the temperature change in the water column above the cables is predicted to be less than 0.01°F. These increases in temperature associated with transmission cable operation fall within the range of normal seasonal variation in ambient lake temperatures (Exponent 2014b). In addition, Exponent estimated that the combined warm zones generated by operation of the transmission cables would represent less than 1.9 millionth of a percent of the total volume of Lake Champlain; therefore, temperature increases in the sediment and water column would not affect lake sturgeon significantly.

Maintenance activities would not affect lake sturgeon significantly because the periodic inspections would be of short duration and would use remote sensing equipment; however, if a fault should occur, the cables may need to be excavated and repaired. The effects of such emergency repairs, if required, would be similar to those that could occur during initial construction but would involve a smaller area over a shorter period.

Mussels

None of the state-listed mussels known to occur historically within proximity of the Project route (i.e., fragile papershell, giant floater, pink heelsplitter, and pocketbook) were observed during the 2014 mussel survey along the underwater portion of the proposed route (HDR 2014a). Long-term exposure to static magnetic fields is not expected to affect survival and reproduction of benthic organisms (Normandeau et al. 2011). Because the zone around the transmission cables in which temperature

would be expected to increase is very limited, and the temperature increase is expected to be a within the normal seasonal variation in lake water temperatures, mussels would not be affected (Exponent 2014b).

Solid-state transmission cables generally require little or no maintenance; therefore, no effects are anticipated due to maintenance. Periodic inspection of the underwater transmission cables using ship-mounted instruments would not affect state-listed mussels because the inspection activities would be non-intrusive.

Effects associated with sediment disturbance, turbidity, and decreased water quality during emergency repairs could include local and temporary biological, physiological, or behavioral effects, including abrasion of gill membranes resulting in reduced ability to absorb oxygen, decrease in dissolved oxygen concentrations in the surrounding waters, impairment of feeding, and impaired ability to locate predators. These effects would be similar to those described for construction but on a smaller scale and over a shorter duration.

5.1.6 TERRESTRIAL HABITATS AND SPECIES

5.1.6.1 Effects of Construction

Construction activities in the terrestrial portion of the Lake Champlain Segment would result in temporary removal of vegetation, trampling of vegetation by heavy construction equipment, root damage associated with excavation, soil compaction, and generation of dust. Areas temporarily disturbed during cable installation would be re-planted with native vegetation following construction to minimize the establishment of invasive species.

Effects on terrestrial habitats and species would occur in the Lake Champlain Segment, but those effects would not be extensive as this portion of the proposed Project is predominately aquatic. The cable would enter and exit the Lake via HDD in Alburgh and Benson, which would entirely avoid impacts to the Lake Champlain shoreline and near shore environments (TRC 2015); therefore, fringe emergent or scrub-shrub wetlands would not be affected.

No area of existing forest would be disturbed temporarily or permanently converted to herbaceous or shrub habitats in the terrestrial portion of the Lake Champlain Segment. The terrestrial portion of the Lake Champlain Segment would be collocated within the existing ROW of Bay Road, which would limit the potential to adversely affect natural forested habitats. A portion of the terrestrial section of the Lake Champlain Segment, as the proposed Project, enters Lake Champlain via HDD, crosses through an area of manicured residential lawn and active agricultural field. These areas provide marginal wildlife habitat due to repeated disturbance through mowing or plowing. A forested area along the margin of Lake Champlain would not be effected as the HDD would allow installation of the cable while entirely avoiding impacts to the near shore environment (TRC 2015).

The terrestrial wildlife species that may be adversely affected would be birds, bats, and semi-aquatic mammals. The construction would occur primarily in fringe habitat along the existing Bay Road ROW, where noise, emissions from cars, ROW maintenance (e.g., mowing), and human activity already influence habitat suitability. Based on an average installation rate of 1 to 8 miles per day, noise and human activity is expected to increase over baseline levels for only a few hours at any one location; therefore, noise and activity associated with construction would be unlikely to cause birds and bats to permanently avoid forage areas, nests, and roosts adjacent to the proposed Project route, although they would be temporarily disturbed and displaced. Noise may reduce communication ranges or interfere with predator/prey detection temporarily when construction equipment is operating in a particular area.

Semi-aquatic mammals are very mobile species and would exit areas of disturbance during cable installation. Muskrat, mink, and beaver generally are present only near the shoreline; effects on those semi-aquatic mammals would be limited because most construction would occur at distances greater than 500 feet from the shore. Terrestrial wildlife is unlikely to be permanently displaced from the area because construction activities would occur in fringe habitats (e.g., existing ROWs or areas of existing development) where disturbance is common (TDI-NE 2014a).

5.1.6.2 Effects of Operations, Maintenance, and Emergency Repair*s*

The transmission cable would be buried within the Lake Champlain Segment; therefore, operations would not affect terrestrial habitats, wildlife, or vegetation. Effects on habitat and species in Alburgh in the Lake Champlain Segment would be similar to those expected for the Overland Segment (***Section 5.2.6***).

Emergency repairs may require local operation of a vessel. Noise associated with repair activities could cause birds and bats to avoid forage areas temporarily. The anticipated infrequent and temporary maintenance and repair activity would not adversely affect bird nests and bat roosts adjacent to the proposed Project route. Semi-aquatic mammals would be affected by noise associated with the repair vessel only temporarily and would return following the activity. Effects on species and habitat in the portion of the Lake Champlain Segment in Alburgh would be similar to those expected for the Overland Segment (***Section 5.2.6***) (TDI-NE 2014a).

5.1.7 TERRESTRIAL PROTECTED AND SENSITIVE SPECIES

5.1.7.1 Effects of Construction

Federally Listed or Protected Species

During construction, noise would increase over baseline levels for only a short time at any given location (TDI-NE 2014a). Should bats be present in the ROI during construction, noise may disperse them temporarily. As construction ceases, bats would return to their habitat; therefore, installing the cable within the Lake Champlain Segment would not adversely affect the Indiana bat or northern long-eared bat.

The Lake Champlain Segment is predominately aquatic, and the approaches to the lake are cleared; therefore, the proposed installation would create no potential for removal of trees that bald eagles might use for perching or nesting. Noise during construction may cause bald eagles to avoid foraging in construction areas temporarily. The average installation rate is proposed to be approximately 1 to 8 miles per day; therefore, increased noise associated with construction would occur for only a short time at any one location (TDI-NE 2014a). The duration of increased noise and human activity, at any one location would not adversely affect bald eagles, and would only result in temporary disturbance and avoidance of habitat for short periods of time.

State-Listed Species

The Lake Champlain Segment is predominately aquatic; therefore, the state-listed terrestrial species expected to occur within the ROI are the bald eagle, little brown bat, Indiana bat, and northern long-eared bat. Noise associated with construction may temporarily affect bald eagles and bats using forage areas in the Lake Champlain Segment, resulting in temporary avoidance of foraging areas near construction.

Migratory Birds
Waterfowl and other migratory birds that use aquatic habitats along the ROI could be displaced from foraging areas temporarily because of noise from underwater cable installation and construction vessel traffic. These birds would likely avoid the construction area and move to similar habitats nearby. Construction noise may temporarily cause increased stress, increased travel time to foraging areas from roosts or nest sites, or reduced foraging success. The effects of increased noise would not be extensive and would be temporary, occurring for only a short time at any one location.

5.1.7.2 Effects of Operations, Maintenance, and Emergency Repairs

Maintenance and emergency repairs may involve underwater instrument surveys and small watercraft operating at least 300 feet from the shoreline (TDI-NE 2014a). The presence of watercraft during maintenance and emergency repairs may displace protected birds and bats, but effects would be minimal and temporary.

5.1.8 TERRESTRIAL WETLANDS

5.1.8.1 Effects of Construction

The Lake Champlain Segment is predominately aquatic; no terrestrial wetlands were identified within this segment. The transmission cable would be buried in the Lake Champlain lakebed. In the portion of the Lake Champlain Segment in Alburgh, the proposed Project would be routed along an existing roadway ROW and in a disturbed field. Shoreline wetlands and near shore habitat impacts would be entirely avoided by utilizing HDD.

5.1.8.2 Effects of Operations, Maintenance, and Emergency Repairs

No terrestrial wetlands would be affected by operations, maintenance, or emergency repairs within the aquatic portion of the Lake Champlain Segment. Effects on wetlands located along the terrestrial portion in the town of Alburgh would be similar to those described for the Overland Segment (***Section 5.2.8***).

5.1.9 GEOLOGY AND SOILS

5.1.9.1 Effects of Construction

Physiography and Topography
Before installing the transmission cable in Lake Champlain, TDI-NE would clear the route of debris by dragging a grapnel along the route, which would occur between June 1 and November 1 approximately one year prior to installing the cables. For portions of the route, a jet plow or a shear plow would be used to create a trench in which the transmission cable would be installed and embedded. These actions would disturb sediments and would change the contours of the lake bottom slightly. Over time, disturbed sediment would resettle into the trench. In other areas, TDI-NE would place concrete mats on the lakebed, which could interrupt currents along the lakebed. Over time, this could cause limited scouring of sediments in areas immediately adjacent to the mats; however, the effect of the mats on the overall bathymetry of the lakebed would be negligible compared to natural fluctuations resulting from currents, storms, and navigational traffic.

Geology
The transmission cable would be installed (buried) in areas of sediment or on top of the lakebed when bedrock is an obstacle to burying the line. The proposed installation techniques would not permeate

the bedrock layer. In areas with multiple feet of sediment above the bedrock layer, the transmission cable would be buried. In shallow water areas where the bedrock layer is near the surface of the lakebed, the transmission cable would be laid on top of the lakebed and protected by concrete mats. Construction and installation of the transmission cable would not disturb any bedrock in the Lake Champlain Segment; therefore, construction would not affect geology.

Sediments

Route-clearing and cable-laying activities would disturb sediment from the lakebed causing a temporary turbidity plume along the construction corridor. Sediments in Lake Champlain are known to contain large concentrations of phosphorus; therefore, disturbing these sediments could resuspend contaminants in the water column and allow them to bioaccumulate or settle in new areas of the lakebed. See ***Section 3.1.3*** and ***Section 5.1.3*** for descriptions of effects on water quality and aquatic resources.

The installation technique would affect the extent of the turbidity plume generated during construction. The jet plow would use jets of pressurized water to temporarily fluidize sediment; this method is proposed for the northern portion of Lake Champlain. The transmission cable would settle into the resulting trench under its own weight before the sediment settled back into the trench, covering the transmission cable. The shear plow mechanically cuts into the sediment, forming a trench for the transmission cable. In areas of water deeper than 150 feet, the transmission cables would lie on top of the lakebed. This method involves no trenching and is proposed for the central portion of Lake Champlain. Although all three techniques would result in temporary resuspension of sediment, the amount of sediment disturbed is expected to be greater using either trenching technique (jet plowing or shear plowing) than laying the cables on the lake bottom.

The extent of the sediment plume would depend on sediment grain size and the mass of the disturbed sediment particles. Sediments along the route vary in size from fine clays to coarser gravelly muds; the fine clays would remain suspended longer than the larger particles and could be transported farther from the construction corridor. Ambient lake conditions, including currents, would also affect the distribution of the sediment plume.

Sediment concentrations in the turbidity plume could be high initially but would decrease rapidly with time and distance. Resettling of sediment grains could alter the original stratigraphy of the lakebed, resulting in a local change in surficial sediment texture and grain size. Most of the displaced sediment is expected to refill the trench immediately, however, because bottom sediment naturally backfills the trench over the cable through wave action or bed-load transportation of sediment. TDI-NE would use installation techniques including the jet plow and shear plow methods that minimize resuspension of sediments. These methods, described in ***Section 2.4.7.1***, create narrow trenches where the cable would settle. The shear plow creates a trench that is more narrow and shallow than the trench created by the jet plow, and as such, would be used in the southern portion of Lake Champlain where historic anthropogenic activities may have affected the quality of lake sediments. Usually, such trenches refill completely in 6 months to 5 years, depending on the soil type and water currents (ISE 2003). Load calculation modeling conducted for the CHPE Project determined that the settling rate of suspended sediments varied between 0.3 and 212,778 feet per day (feet/day), with higher rates at the northern and southern ends of the lake and lower rates in the middle of the lake, which is attributable to increased current movement. The median settling rate for sediments in Lake Champlain was 1.6 feet/day (DOE 2014). Since the proposed NECPL Project is using the same technology as the CHPE project in New York, a similar load calculation can be applied.

A receiving casing would be an approximately 48 inch steel pipe installed into the lake bottom for approximately 40 feet at an anticipated water depth of 30 feet for a total area of impact of 33 cubic yards. An estimated 107 to 142 cubic yards of silt and clay sediment would be dredged at the proposed

HDD cofferdam location where the proposed transmission cable would enter Lake Champlain in Alburgh and exit Lake Champlain near Benson, Vermont. The cofferdam would help contain sediment disturbed during dredging of the HDD exit pit. The excavated area within the cofferdam would be backfilled with clean sand at the completion of construction, and the surface would be restored to its original grade. TDI-NE estimates that the proposed cofferdams would be in place approximately three months (TDI-NE 2015). Any shoreline vegetation disturbed during construction would be restored by implementing BMPs and a revegetation plan.

Alternatively, TDI-NE may use a receiver casings at the exit location from Lake Champlain rather than a cofferdam. A large-diameter pipe segment would be installed into the lake bottom and would extend above the water surface. Once the transmission cable is installed, the sediment and turbid water in the pipe would be pumped into a holding tank, and the pipe would be removed. Installing and removing the pipe would disturb local sediment but would reduce turbidity compared to the cofferdam.

Seismicity

Construction of the proposed Project would not increase the risk of seismic hazards. Although the Lake Champlain Segment has the potential to incur low to moderate damage during a seismic event, the overall probability of seismic activity in the area is small (USGS 2014).

5.1.9.2 Effects of Operations, Maintenance, and Emergency Repairs

Physiography and Topography

The transmission cable would be designed to be maintenance free. No effects on physiography and topography would be expected to result from operating or inspecting the transmission cable. Immediately after installation and every 5 years thereafter, TDI-NE would conduct post-installation surveys of the underwater route in Lake Champlain to ensure that the required depth of transmission line burial is achieved and maintained (NYSPSC 2013). The surveys would not affect physiography and topography. If the transmission cable should need to be buried deeper in the lakebed at any time during the life of the Project, actions needed to address the issue would be likely to affect the topography of the lakebed. Exact effects would depend on the methods used to address the issue but would most likely be similar to the effects of construction, except confined to a specific area.

Emergency repair activities could require the transmission cables to be unearthed; these activities would affect physiography and topography in ways similar to, but less extensive than, construction activities. Activities would be intermittent, would occur only when required, and would be shorter and confined to a specific area.

Geology

Operation, inspection, and emergency repairs of the transmission line would not affect geology.

Sediments

Operation of the transmission cable would slightly raise the temperature of sediment immediately surrounding the transmission cable. TDI-NE conducted thermal modeling for the top 2 inches of sediment, where mercury methlyating bacteria are most active and benthic macroinvertebrates are most likely to live. Thermal model simulation indicates a small increase in sediment temperature when the transmission cable is buried in a trench at a depth of 3 to 5 feet, which represents approximately 54 percent of the transmission cable route in Lake Champlain. In the top 2 inches of sediment, modeling indicates that the expected temperature increase would range from 33°F at the top of the sediment to 34°F at 2 inches below the sediment surface. Where the cable is subjected to self-burial, which represents approximately 43 percent of the Lake Champlain proposed route, modeling indicates that

the temperature would range from 48°F at the top of the sediment to 51.6°F at a depth of 2 inches below the sediment surface, assuming that the ambient sediment temperature is 46°F (Exponent 2014b).

Load calculation modeling conducted for the CHPE Project determined that the settling rate of suspended sediments varied between 0.3 and 212,778 feet per day (feet/day), with higher rates at the northern and southern ends of the lake and lower rates in the middle of the lake, which is attributable to increased current movement. The median settling rate for sediments in Lake Champlain was 1.6 feet/day (DOE 2014). Since the proposed NECPL Project is using the same technology as the CHPE project in New York, a similar load calculation can be applied.

Maintenance of the proposed (maintenance-free) transmission cable would not likely affect sediments. Emergency repair activities could require the proposed transmission cables to be excavated and replaced. Replacement portions of the proposed transmission cable would be reburied using a jet plow. These activities would affect sediments similarly to, but less than, initial construction. These effects would be negligible because they would be intermittent, would occur only when required, and would be of a shorter duration than the effects of construction.

Seismicity

Operation of the proposed Project would not increase the risk of seismic hazards. During a seismic event, which would be rare, the transmission cable could be damaged. The transmission cables would be insulated, armored, and designed to withstand the mechanical forces experienced during installation, which are substantially greater than forces during a seismic event. Furthermore, the transmission cables would not be installed in a straight line and would contain slack to accommodate seismic events. The inherent flexibility of the transmission cables would allow them to shift and deform slightly with seismic events.

If a transmission cable failed due to a seismic event or other cause, the protection system would de-energize the transmission system in approximately 33 milliseconds. High-voltage DC transmission cables dissipate very limited energy under short-circuit (i.e., fault) conditions; therefore, no direct effects on the environment, navigation, or public safety would be anticipated. A cable repair procedure that considers navigation and the environment would be implemented if the transmission cable failed following a seismic event.

5.1.10 CULTURAL RESOURCES

Installing the Lake Champlain Segment of the proposed transmission cable could adversely affect three known underwater archaeological sites located within the APE of the Lake Champlain Segment (Lake Champlain Maritime Museum 2014)[37]. Two of these sites were recommended to be considered eligible for the NRHP during a recent study, and one was previously determined to be eligible for the NRHP.

5.1.10.1 Effects of Construction

All three of the known underwater archaeological sites extend across the entire width of Lake Champlain, and the proposed underwater cable would intersect each site, constituting a potential adverse effect on each property under 36 CFR 800.5(a)(1). Consultation regarding potential adverse effects on historic properties through the Section 106 process is in progress, and a PA has been prepared pursuant to 36 CFR 800.14(b) to manage and resolve any potential adverse effects. A Final PA has been distributed to the VTSHPO for signature as well as to the concurring parties. ***Appendix I*** provides the letter from the DOE initiating Section 106 consultation with the VTSHPO and VTSHPO's

[37] One of the sites is both terrestrial and underwater.

comments on the Draft PA. Avoidance of these sites is not possible; therefore, TDI-NE would develop strategies to minimize and mitigate effects that may include site selection, documentation, and monitoring.

In consultation with the VTSHPO, TDI-NE developed an agreement (See ***Appendix I***) to conduct all appropriate measures and/or investigations prior to any ground disturbing activities. TDI-NE would develop a Cultural Resources Management Plan (CRMP) that outlines "the processes for resolving adverse effects on historic properties within the APE and determining the appropriate treatment, avoidance, or mitigation of any effects of the Project on these resources." TDI-NE's proposed measures would be implemented within the APE. Mitigation measures may include careful subsurface testing, site selection, documentation, and monitoring of the underwater sites in order to minimize effects on the sites. Measures that TDI-NE identified at this time include developing a CRMP and addressing the discovery of unanticipated cultural resources.

5.1.10.2 Effects of Operations, Maintenance, and Emergency Repairs

The operation and inspection of the Lake Champlain Segment would not affect cultural resources within the APE. Any emergency repairs would occur in areas previously disturbed by construction of the transmission cable and, in some cases, in areas purposefully selected to avoid cultural resources; therefore, these activities would have no adverse effects.

5.1.11 INFRASTRUCTURE

5.1.11.1 Effects of Construction

Electrical Systems
Seven utility crossings (electrical, telecommunication and/or ferry cables) have been identified within the Lake Champlain Segment ROI. Utility infrastructure would be protected through the use of concrete mats. Owners and operators of electrical lines crossed by the proposed NECPL Project, or within Project construction corridors, would be consulted prior to installation. Adequate utility infrastructure protection measures at crossings would be developed in consultation with utility providers. (TDI-NE 2014c).

Water Supply Systems
The proposed Project route within Lake Champlain Segment would avoid public water supply systems and private water supplies, where possible. The Project would pass within 100 feet of the deep intake for the Grand Isle Consolidated Water District. According to the operator, the public water system could operate solely using the shallow intake during Project construction (Perry 2014). Owners/operators of public water supplies would be notified at least 3 weeks prior to cable installation. TDI-NE would work closely with Ed Weed Fish Culture Station personnel to ensure that the fish hatchery intake pipe is protected, which may include concrete mats.

Installation of the proposed transmission cable would not require significant use of municipal water or wastewater facilities. Waste material generated on vessels would be stored in holding tanks until it could be disposed of at a sanitary waste pump-out facility. These waste materials would be properly deposited into the local wastewater treatment facility.

Measures would be taken during installation of the proposed transmission cable to minimize the sediment resuspension. TDI-NE proposed mitigation measures are presented in ***Appendix G***. Aquatic transmission cables would be installed using jet plow techniques between the United States and Canada; in Alburgh Vermont and approximately MP 74. This could result in temporary, local increases in

turbidity. Shear plow techniques would be used south of MP 74 to minimize turbidity and sediment resuspension. Additionally, TDI-NE proposes to have HDD boring enter into a receiver casing which is driven into the lake bottom at a sufficient depth to contain drilled mud. Real-time monitoring of turbidity would be employed during construction. Cofferdams may be used in lieu of the receiver casing in the water-to-land transition areas to contain sediment suspended as a result of drilling or dredging.

Stormwater Management
No substantial stormwater management infrastructure has been identified within the Lake Champlain Segment ROI; therefore, no effects on stormwater management systems would be expected.

Communications
When underwater fiber optic and telecommunication cables are crossed, infrastructure would be protected through the use of concrete mats. Utility owners and operators of cables crossed by the proposed NECPL Project, or within the proposed Project construction corridor, including existing electric, gas, telecommunications, water and wastewater facilities, would be consulted prior to installation. Adequate utility infrastructure protection measures at crossings would be developed in consultation with utility providers.

Natural Gas Supply
No natural gas pipelines or infrastructure have been identified in the Lake Champlain Segment ROI. If natural gas infrastructure were to be discovered during construction activities, appropriate BMPs and avoidance/mitigation measures would be developed in consultation with utility providers.

Liquid Fuel Supply
No liquid fuel or other hazardous liquid pipelines or infrastructure have been identified in the Lake Champlain Segment ROI. If liquid fuel infrastructure were to be discovered during construction activities, appropriate BMPs and avoidance/mitigation measures would be developed in consultation with utility providers. Equipment and vessels used to install Project components would consume liquid fuel in small quantities. The amount of fuel consumed as a result of Project construction is expected to be only a small percentage of the supply in the area.

Sanitary Sewer and Wastewater Treatment
No sewer or wastewater infrastructure have been identified in the Lake Champlain Segment ROI. If previously unknown sewer or wastewater infrastructure is identified within the Lake Champlain Segment ROI, adequate utility infrastructure protection measures at crossings would be developed in consultation with utility providers. The installation of the proposed Project would not require the use of municipal wastewater facilities.

Solid Waste Management
Solid waste management could be affected by the disposal of material excavated during dredging activities. Soils excavated at proposed HDD locations would be stored on site temporarily during construction and would be used to restore the locations to their previous grade once the drilling process has been completed. If soils are removed, they would be disposed of at approved locations as allowed by state and federal regulations. TDI-NE estimated that approximately 100 cubic yards of drill cuttings (used bentonite and excess soil) would be generated for appropriate disposal at each of the major HDD installations (TDI-NE 2014a).

A temporary cofferdam would be used for drilling operations extending from land into the water. Approximately 119 to 179 cubic yards of sediment are proposed to be excavated from within a

cofferdam. Dredged material would be placed on a barge for storage temporarily and disposed of as allowed under existing state and federal requirements (TDI-NE 2014a).

5.1.11.2 Effects of Operations, Maintenance and Emergency Repairs

Electrical Systems

As discussed in ***Section 3.1.13***, the ISO-New England's *2014 Regional System Plan* identifies several challenges for maintaining system reliability for the 10-year planning horizon. The *2014 Regional System Plan* notes that New England has become an "energy constrained system" due in part to heavy dependence on natural-gas-fired generation and the planned retirement of generation resources. The proposed NECPL Project would increase regional supply and provide reliable electrical power, helping to maintain system reliability and to aid in overcoming the challenges presented in the *2014 Regional System Plan*.

Project transmission cables would be designed to require limited maintenance once installed. The Project would use solid-state HVDC cables that eliminate the potential for leaks. These cables would contain protective layers designed to provide superior mechanical and corrosion protection, thereby reducing the need for repairs over the lifetime of the Project. The HVDC technology would immediately terminate the flow of electricity if the cable is compromised. In-water cables would be inspected regularly to confirm system integrity.

Water Supply Systems

The proposed Project route within Lake Champlain would avoid public water supply systems and private water supplies where possible. TDI-NE would work closely with the Grand Isle Consolidated Water District to limit impacts to the deep water intake resulting from routine or emergency maintenance. Sediment disturbance associated with maintenance and emergency repair activities would be infrequent, brief, and limited to the immediate vicinity of the repair site.

Stormwater Management

No substantial stormwater management infrastructure has been identified within the Lake Champlain Segment ROI; therefore, no Project-related operational or maintenance effects would be expected.

Communications

The Project would use HVDC technology and transmission cable designed to eliminate the potential electromagnetic interference (EMI) that could affect communications equipment along the Lake Champlain Segment ROI (TDI-NE 2014a). Therefore, no operational or maintenance effects on communications systems would be expected.

Natural Gas Supply

No natural gas pipelines or infrastructure have been identified in the Lake Champlain Segment ROI; therefore, no operational effects on natural gas infrastructure would be anticipated. No equipment used to service and maintain Project components would consume natural gas.

Liquid Fuel Supply

No pipelines or infrastructure for liquid fuel or other hazardous liquids have been identified in the Lake Champlain Segment ROI; therefore, no operational effects on liquid fuel infrastructure would be anticipated. Equipment and vessels used to service and maintain Project components would consume liquid fuel in small quantities; however, the Project would be designed to be relatively low-maintenance and necessary maintenance activities would be expected to be brief (less than 30 days). Emergency repair activities would occur as needed.

Sanitary Sewer and Wastewater Treatment
Operation and maintenance of the NECPL Project would generate no wastewater; therefore, no effects on sanitary sewer and wastewater treatment systems would be anticipated.

Solid Waste Management
Operation and maintenance of the NECPL Project would produce no solid waste. If excavation is required for emergency repairs, soil would be stored temporarily and used to restore locations once repairs are completed.

5.1.12 RECREATION

5.1.12.1 Effects of Construction

All effects of construction on recreation resources would be temporary. The effects of construction of the Lake Champlain Segment on recreational activities and recreation users would be minor. Increased vessel activity along the transmission cable route during the underwater transmission cable installation would result in additional traffic on the lake. Transmission cable installation would not prohibit any water-based commercial or recreational activities; vessels would continue to use the lake. Installation would cause a minor amount of recreational displacement, however, because during construction the cable-laying work site would be off-limits to other vessels, which would be required to either travel around the work site or to use a different area of the lake. In the Lake Champlain Segment, approximately 1 to 8 miles of cable can be laid in a day, during which time the installation area would be all other traffic. The displacement would be temporary and localized, and could be expected to disrupt and displace boaters and ferry traffic for the days that the work is in that area. Further discussion of ferry impacts are included below and in the transportation section. Recreationists wanting to use the current work area would be displaced either spatially (would need to go around the work zone) or temporally (use the area another day).

Shoreline recreation users also may be displaced temporarily during construction. Access to shoreline recreation facilities, such as boat launches, fishing access points, and marinas, could be partially restricted for a short time during construction activities in that area, and users of that area would be required to recreate elsewhere. These effects would be localized, and shoreline recreationists wanting to use the current work area would be displaced either spatially (would need to go around the work zone) or temporally (use the area another day). In the Alburgh section of the Lake Champlain Segment, HDD activities would occur on the 0.2 miles of property owned by TDI-NE and the VFWD's Korean War Veterans Fishing access area. Recreation users that visit the access area and fishing platform would be temporarily displaced and would need to find another accessible fishing platform during construction specifically in that area. Since the platform is located in Alburgh and would be the first HDD location where the cable would enter Lake Champlain, the closure or restricted use of this site would be limited to approximately 2 months, thereby not having a long-term effect on recreational users.

Construction activities in the Lake Champlain Segment would affect commercial ferry operations, which would thus affect recreational use of the lake. When cable-laying vessels are in the vicinity of a ferry route, they may temporarily delay or interrupt that commercial ferry operation. At the southernmost (seasonal) ferry line in Shoreham, Vermont, where the ferry line intersects the proposed Project route, operation of the Fort Ticonderoga ferry would be affected because the lake-bottom cables that guide the ferry would be temporarily removed prior to installation of the transmission cable and reinstalled afterward.

All effects on recreation activities and users from the construction phase of the Project would be mitigated by communication and outreach activities. Local waterway users and other stakeholders would be notified of the schedule for installing the transmission cables, which would also be coordinated with ferry operators to minimize disruption of ferry services.

5.1.12.2 Effects of Operations, Maintenance, and Emergency Repairs

Effects of operation on recreation would be minimal. Following construction, the transmission cable would not affect recreational use of Lake Champlain because the transmission cable would be under the lakebed. No permanent aboveground facilities that would affect recreational resources would be constructed along this segment of the proposed Project route. Maintenance activities, such as cable inspections, would be expected to occur intermittently throughout the life of the transmission cable. These intermittent inspections would have minimal disruptive effects on commercial or recreational use of the lake. If emergency repairs of the transmission cable should be required, (e.g., recovering, splicing, and installing a new cable section), effects would be similar to those that would occur during initial installation. These disruptive effects would be less than 30 days and restricted to a discrete area of the lake where the transmission cable repairs were required.

5.1.13 PUBLIC HEALTH AND SAFETY

5.1.13.1 Effects of Construction

Contractor Health and Safety

The health and safety of contractors could be affected during construction periods, as described for a similar project proposed in New York in the CHPE FEIS. The effects of the proposed NECPL Project on public health and safety would be the same as those of the CHPE Project, except that the NECPL Project would occur in Vermont. The portions of the CHPE FEIS that describe the effects of construction on public health and safety (Volume 2, pp 5-34 to 5-35) are incorporated here by reference.

Risks to worker's safety would be reduced by enacting HASPs and an Emergency Contingency Plan. The contractor would develop a HASP for each specific construction activity, including on-water work associated with laying the cable under Lake Champlain. The HASPs would identify requirements for minimum construction barriers and provisions for worker protection as required under the National Electric Safety Code (NESC) and Occupational Safety and Health Administration (OSHA) 29 CFR Part 1926, *Safety and Health Regulations for Construction*. The HASPs would contain information on hazard communication, identification, risk assessment, and other information required to perform the work safely, including a list of mandatory PPE that all construction personnel must wear. Construction activities on Lake Champlain would require an Aquatic Safety and Communications Plan detailing USCG regulations. This plan would meet regulatory permit conditions including OSHA 29 CFR 1926.106.

Public Health and Safety

The risk to public safety during construction activities on Lake Champlain would be minimal. The HASPs filed by the general contractor would detail the requirements for barriers to ensure safe navigation and recreation during the construction. These barriers would be enforced by federal and state resource agencies with jurisdictional authority over Lake Champlain.

Magnetic Field Safety

The transmission cable would not be powered during construction; therefore, it would not produce a magnetic field. No magnetic fields from the proposed transmission cable would affect safety during the construction phase of the proposed Project.

5.1.13.2 Effects of Operation, Maintenance, and Emergency Repairs

Contractor Health and Safety

During normal operating conditions, no work on the water would be required; therefore, operation of the proposed Project would not affect the health and safety of contractors. Workers may be put at extra risk during maintenance of the Lake Champlain Segment. The HASPs filed by the contractor would be followed throughout the life of the proposed Project and would require the general contractor and operator to identify appropriate worker safety conditions during maintenance activities. These HASPs would outline appropriate worker safety considerations for on-water work and would describe the mandatory minimum training qualifications for personnel performing these jobs.

Public Health and Safety

No effects on public health and safety would be expected during the operation of the proposed Project because the transmission cables would be buried under the Lake Champlain lakebed or installed on top of the lakebed. Before the proposed Project begins operation, the route would be appropriately marked on navigational charts for Lake Champlain and added to the VELCO "Call Before You Dig" database. The minimal risk to the public from regularly scheduled maintenance and inspections or emergency repairs would be similar to those for installation, but over a smaller area and shorter duration.

Magnetic Field Safety

Electric and magnetic fields are present during the generation, transmission, distribution, and use of electrical energy (Aldrich and Easterly 1987). Studies suggest that exposure to elevated EMFs may adversely affect health, particularly related to potential disturbances of cardiac pacemakers. Normal operation of the proposed Project could induce EMFs in the environment and within organisms that cross into its field; however, the polarity and sheathing of the proposed Project would cancel and reduce most if not all of the EMFs produced by the cable.

As discussed in the CHPE FEIS, pages 5-40 and 5-41, EMF interference with cardiac pacemakers may occur in various work environments, potentially causing pacemakers to initiate treatment procedures unnecessarily (Alanko et al.2011). As a cautionary principle, all HASPs would require contractors to perform a risk assessment before conducting work to ensure the safety of workers with cardiac pacemakers.

Results of a numerical study that calculated the expected magnetic field within the Lake Champlain Segment suggest that the fields would diminish quickly with distance from the transmission cable (Exponent 2014a). At 10 feet from the cables, the expected magnetic field deviation would be only 10 percent of the ambient background geomagnetic level, and at 25 feet the deviation would be only 1 percent of the ambient level (Exponent 2014). The strongest magnetic field expected anywhere along the submarine portion of the route is predicted to occur 1 foot above the lakebed (Exponent 2014). The level produced would be approximately 0.1 percent of the general public exposure limit of 4,000,000 mG recommended by the International Commission for Non-Ionizing Radiation Protection (ICNRP). Furthermore, this level is well below the medical device standard (10,000 mG) for exposure to DC magnetic fields. The risk to public health and safety from EMFs during the operation and maintenance of the proposed transmission cable is so small that it is practically zero.

Magnetic fields produced by the transmission cable could elevate incidental risks to public safety. Boaters using traditional compasses that rely on Earth's magnetic field may detect a small effect on compass readings above buried cables in shallow water; the deviation would diminish quickly with distance (Exponent 2014). Exponent calculated compass deflections and found that, in water depths of just 10 feet, maximum compass deviations would be 18.4 degrees directly over the cable and would decrease to 4.9 degrees at a distance of 20 feet or more from the cable centerline. Compass readings

from the global positioning system (GPS) would not be affected. Recreational boaters would be advised through public education campaigns to use caution over cable areas when they are navigating by compass.

Intentionally Destructive Acts and Other Causes of Structural Failure

The DOE considered the potential effects of intentionally destructive acts and other potential causes of transmission line structural failure. Failures of the transmission line due to accidents could occur as a result of excavations by third parties, ships anchors, or dredging. TDI-NE would minimize the potential for third-party damage of the transmission line. TDI-NE would locate the transmission line within the railroad ROW in concert with those organizations to minimize the chances that a derailment would affect the transmission line. TDI-NE also worked with the USACE and USCG to locate the cables in areas where they would be less likely to be affected by ship anchoring or channel dredging.

Failures could occur as a result of intentionally destructive acts. In the aftermath of the terrorist attacks that occurred on September 11, 2001, terrorism has become a real issue for the facilities under the DOE's jurisdiction. Security awareness has increased throughout the electrical transmission industry and the nation. The likelihood of future acts of terrorism occurring along the proposed NECPL Project route is unpredictable because of the various motivations and abilities of terrorist organizations. The proposed NECPL Project would include underground electrical transmission cables and the DC to AC new converter station. Much of the proposed underground transmission line would be within unfenced ROWs and, therefore, would be accessible to those who want to damage the system. Underground installation would provide a degree of protection for transmission cables.

In general, the proposed transmission line presents no greater target for intentionally destructive acts than any other high-voltage transmission lines or power plants in the United States. Although the likelihood of intentional destruction of the proposed structures is difficult to predict given the characteristics of the proposed NECPL Project, such acts are unlikely based on past experience along the thousands of miles of electrical transmission lines in the country. If such an act were to occur and to succeed in destroying aboveground infrastructure or other equipment related to the proposed NECPL Project, the main consequence for the public would be the temporary loss of 1,000-MW of electrical service in the Vermont area and the ISO-New England service area.

5.1.14 NOISE

Construction activities could cause an increase in sound that is well above ambient noise levels. Sources of noise associated with constructing the proposed NECPL Project would include equipment that is typically found at large-scale construction sites, as well as other activities and processes. Construction equipment usually exceeds the ambient sound levels by 20 to 25 dBA in an urban environment and up to 30 to 35 dBA in a quiet suburban area (EPA 1971 as cited in DOE 2014). ***Table*** 5-2 lists construction equipment that might be used for the proposed NECPL Project and associated noise levels.

TABLE 5-2. NOISE PRODUCED BY TYPICAL CONSTRUCTION EQUIPMENT

Equipment	Noise Level (dBA at 50 ft)*
Trucks	82-95
Cranes (moveable)	75–88
Cranes (derrick)	86–89
Vibrator	68–82
Saws	72–82
Pneumatic Impact Equipment	83–88
Jackhammer	81–98
Pumps	68–72
Generators	71–83
Compressors	75–87
Concrete Mixers	75–88
Concrete Pumps	81–85
Front Loader	73–86
Back Hoe	73–95
Pile Driving (peaks)	95–107
Tractor	77–98
Scraper/Grader	80–93
Paver	85–88

*Construction equipment with noise-control devices would generate less noise than shown in this table.

Source: EPA 1971

A model was used to predict sound levels as a function of distance from cable installation operations for the CHPE Project. Installation operations for the proposed NECPL Project would be similar to those used for the CHPE Project; therefore, the model results and analysis are applicable to the NECPL Project. Modeling methods are described in more detail in ***Section 5.1.17*** of the CHPE FEIS (DOE 2014).

5.1.14.1 Effects of Construction

Water-based construction activities, transmission cable installation, ancillary equipment use, and support activities in Lake Champlain would produce noise. Laying the aquatic transmission cables using jet-plowing would be a continuous, 24-hour operation, with nighttime shutdowns occurring only in select sensitive-receptor areas such as close to residential areas (TDI-NE 2014b). The cable-laying vessel would use azimuth units as propulsion devices and would use diesel-powered generators to supply electricity to equipment motors. In addition to the cable-laying vessel or barge, smaller vessels would be operated to support crew shift changes, deliver supplies, refuel equipment, and supervise work. The transmission line cables would be delivered to the installation vessel via barges travelling through the Champlain Canal. Equipment on barges or vessels that would increase sound levels includes main drive engines, diesel generators, pumps, thrusters, and winches.

Most installation activity would be away from the shoreline in the deeper sections of Lake Champlain; the cable route is more than 500 feet from shoreline except where the cable enters and exits Lake Champlain. Noise of vessels and heavy equipment could affect shoreline residents where the

transmission line would be installed close to the shoreline. Such noises may have a 1-hour peak of up to 80 dBA at a distance of 35 feet. This is equivalent to the noise level of a garbage disposal, an average factory, a propeller plane flyover at 1,000 feet (88 dB), a diesel truck at 40 miles per hour (mph) at 50 feet (84 dB), or a diesel train at 45 mph at 100 feet (83 dB) (Industrial Noise, Inc.[38]). At 250 feet, the sound level would be 62 dBA, which is comparable to conversation in a restaurant, office, background music, or an air conditioning unit at 100 feet.

Approximately 28 permanent and seasonal residences are located within 500 feet of the proposed aquatic route, and about 11 residences are located within 250 feet of the route, concentrated near the Mt. Independence State Historic Site in Orwell, Vermont. Given the continuous progression of installation at an average rate of 1 to 8 miles per day, nearby receptors on the shoreline would be unlikely to be subject to noticeable sound increases for more than a few hours at any one location. Within the Lake Champlain Segment, construction activities generally would occur at distances greater than 500 feet from noise-sensitive land uses; therefore, extrapolating from the estimates displayed in the ***Table 5-2*** and assuming a 6 dBA decrease in noise levels with each doubling of distance, noise levels from the transmission line installation activities at the shore generally would be less than 56 dBA, which is comparable to noise levels of a quiet suburb, a conversation, or a large electrical transformer at 100 feet (Industrial Noise, Inc.[39]). Construction would occur closer to shore in a few places at Chimney Point State Park and southward. Overwater construction may occur during nighttime hours but would persist in any given location for a period of 1 to 2 hours.

Table 5-3 summarizes estimated noise levels associated with aquatic installation activities at distances of 35, 50, 100, and 250 feet from the sources. No noise measurements for a purpose-built barge are readily available; therefore, noise estimates are from the Hudson River PCB Dredging Program as a representative example (Epsilon Associates 2006 as cited in DOE 2014). The cable-laying vessel or barge would include similar equipment to that modeled for the PCB Dredging Program. These estimates assume that dredging work would be performed from a barge and that ancillary equipment would include a tug, workboat, excavator clamshell dredge, survey/crew boat, onboard generator and lights, and 500-horsepower pump.

TABLE 5-3. PEAK ONE-HOUR DURATION NOISE LEVELS TYPICAL OF CONSTRUCTION ON WATER

Sound Levels	Decibels
Sound Level at 35 Feet	80 dBA
Sound Level at 50 Feet	77 dBA
Sound Level at 100 Feet	70 dBA
Sound Level at 250 Feet	62 dBA

Noise generated from the water-to-land HDD operation would be relatively constant for approximately up to one field season (June 1to November 1), and at levels up to 89 dBA within 100 feet of the HDD equipment, would be slightly louder than typical construction noise levels (DOE 2007 as cited in DOE 2014). The HDD cofferdam location at each end of Lake Champlain would be approximately 400 feet from shore. Work at the cofferdam site would be restricted to daylight hours and if cofferdams are use, they would likely be in place up to three months (TDI-NE 2015). Construction equipment would be

[38] http://www.industrialnoisecontrol.com/comparative-noise-examples.htm
[39] http://www.industrialnoisecontrol.com/comparative-noise-examples.htm

equipped with appropriate sound-muffling devices (i.e., original equipment manufacturer or better) and would be maintained in good operating condition at all times.

5.1.14.2 Effects of Operations, Maintenance, and Emergency Repairs

Operation of the Project would create no sound, and noise generated during routine inspection activities would have no significant effect. A small vessel would be used to tow remote sensing equipment along the transmission line route. The increase in sound levels resulting from the inspection activities would be brief but would occur multiple times over the operating life of the transmission line. Noise levels generated from emergency repair activities would be similar to those expected during construction (***Table 5-2)***, except the work would be restricted to a discrete area and would be shorter in duration.

5.1.15 HAZARDOUS MATERIALS AND WASTES

5.1.15.1 Effects of Construction

Installing the aquatic transmission cable in Lake Champlain would disturb contaminants in the lake sediment. Jet plowing and shear plowing burial techniques would result in temporary, localized resuspension and transportation of sediment and contaminants from the lakebed (TDI-NE 2014a). Most of the suspended sediment and any associated contaminants would resettle into the trench created to install the aquatic transmission cable. Sediment disturbances would be limited to small work areas during the installation of the aquatic transmission cable; therefore, disturbed sediment would remain within the area where it originated (TDI-NE 2014a). TDI-NE would train construction personnel to be alert to indicators of unknown buried or illegally deposited hazardous materials. If any indicator(s) of contamination are observed during construction (e.g., stained soils or unusual odors), contractors would be required to stop work and adhere to applicable regulations. TDI-NE would work cooperatively with state regulators to identify the potentially responsible party(ies) who would be held liable for the clean-up process (TDI-NE 2015).

To minimize the potential effects of hazardous materials and wastes, TDI-NE would train contractors in the appropriate hazardous materials and waste-handling protocols:

- establish a SPCC Plan or its equivalent to prevent, control, and minimize impacts from a spill of hazardous materials, hazardous wastes, or petroleum products;
- use secondary containment where applicable;
- keep appropriate spill-control equipment such as containment booms, water skimmers, and sorbents on site and ready for use; and
- follow all appropriate federal and state of Vermont regulations regarding management of hazardous materials and wastes.

Hazardous materials would be disposed of at licensed, regulated facilities and non-hazardous materials would be disposed in accordance with all appropriate laws, rules, and regulations.

5.1.15.2 Effects of Operations, Maintenance, and Emergency Repairs

Minimal amounts of hazardous materials and petroleum products would be needed to operate the vessels, remote diving vehicles, and other equipment to conduct routine non-intrusive inspections of the aquatic transmission cables. Such activities would be temporary and brief but would occur multiple times over the operating life of the transmission cables. If emergency repairs requiring unearthing aquatic transmission cables should be needed, additional use of hazardous materials and petroleum products would be required, resulting in local disturbances of sediment that may contain contaminants. The aquatic transmission cables are designed to be maintenance-free and to require infrequent

inspections; therefore, any hazardous materials and wastes generated by inspections and emergency repairs would be negligible. The aquatic transmission cables do not contain any hazardous fluids, thereby eliminating any potential for sediment contamination from the cables (TDI-NE 2014a).

The proposed Project would not include the remediation of existing contaminants within Lake Champlain because TDI-NE would not be responsible for remediating contamination caused by others, and the transmission line installation process would not exacerbate existing conditions.

5.1.16 AIR QUALITY

The effects of the proposed Project on local and regional air quality are evaluated based upon the increases or decreases in regulated air pollutant emissions; ambient air quality; and whether a proposed action is located in an attainment, nonattainment, or maintenance area for criteria pollutants. Both the Lake Champlain and Overland Segments are in attainment for all criteria pollutants.

Effects on air quality associated with the proposed Project would result from gaseous and particulate emissions from construction equipment, vessels, other vehicles, and fugitive dust.[40] Emission calculations were performed using the most recent emission factors published in EPA's AP-42, *Compilation of Air Pollutant Emission Factors*. Additional emission factors were modeled using EPA's NONROAD2008 Model. References for various emission factors used in the analysis for the Lake Champlain Segment are included in ***Appendix K***.

5.1.16.1 Effects of Construction

Emissions of air pollutants associated with the installation of the aquatic transmission cables would be primarily from diesel fuel-powered internal combustion engines, heavy equipment, barges, boats, and generators. Emitted pollutants would include CO, NO_x, SO_2, CO_2, VOCs (e.g., aldehydes and PAH), and PM. Construction activities would not be continuous and would result in only temporary increases in pollutant concentrations.

The Lake Champlain Segment is approximately 98 miles long. The installation rate of the transmission cable is estimated to be approximately 1 to 8 miles per day. Installation of aquatic transmission cables is expected to be completed within approximately 5 months. Emissions would be distributed throughout the construction phase and over a relatively large area. Although sensitive receptors, including schools, daycare facilities, hospitals, elderly housing, and convalescent facilities, are present along the shoreline, the pollutant emissions from the barge, boats, and other heavy equipment would be temporary. In addition, construction emissions are not expected to cause or contribute to a violation of national or state ambient air quality standards, expose sensitive receptors to substantially increased pollutant concentrations, or exceed any evaluation criteria established by SIP. Emissions from proposed construction activities in the Lake Champlain Segment are summarized in ***Table 5-4.*** Emissions calculation spreadsheets using MOVES are provided in ***Appendix K***

TABLE 5-4. ESTIMATED AIR EMISSIONS RESULTING FROM CONSTRUCTION ACTIVITIES IN THE LAKE CHAMPLAIN SEGMENT

Project Area	NO_x (tpy)	VOC (tpy)	CO (tpy)	SO_2 (tpy)	PM_{10} (tpy)	$PM_{2.5}$ (tpy)
Lake Champlain Segment	44.53	2.47	10.73	3.41	1.75	1.69

Key: tpy=tons per year

[40] Particulate matter or dust that is released into the air from disturbance of granular material (soil) by mechanical equipment or vehicles.

TDI-NE has proposed the following measures to reduce emissions: maintaining construction equipment properly, minimizing idling, using low-emission construction equipment, applying soil stabilizers or wetting dry soil on roads to limit dust releases, covering loads, and reseeding construction areas in the Alburgh and Benson areas.

Greenhouse Gas Emissions

Construction activities within the Lake Champlain segment are estimated to emit approximately 9,985 tons of CO_2 equivalent (CO_2-eqv) GHG emissions over the entire construction period (***Table 5-5***). The estimated GHG emissions from construction of the proposed Project would be small (<1%) compared to the 8.27 million tons of CO_2-eqv emissions in Vermont in 2012 (VDEC 2015).

TABLE 5-5. ESTIMATED GREENHOUSE GAS EMISSIONS RESULTING FROM CONSTRUCTION ACTIVITIES IN THE LAKE CHAMPLAIN SEGMENT

Proposed Project Segment	CO2 (tpy)	CH4 (tpy)	N2O (tpy)	CO2-eqv (tpy)
Lake Champlain Segment	3,718	0.12	0.04	3,735

5.1.16.2 Effects of Operations, Maintenance, and Emergency Repairs

Post-construction activities within the Lake Champlain Segment would consist primarily of transmission cable inspections and emergency repairs. Although, these activities would be temporary, they would occur multiple times over the operating life of the transmission cables. Regular inspections of the proposed maintenance-free transmission cables would be performed according to the manufacturer's specifications to ensure equipment integrity. Appropriate vessels and qualified personnel would be used to complete any emergency repairs of an aquatic transmission cable according to the ERRP. Equipment and vessels similar to those used during construction would be used for emergency repairs. The annual emissions from inspection and emergency repairs along the Lake Champlain Segment would be considerably less than the construction emissions and would not cause or contribute to a violation of any national or state ambient air quality standard, expose sensitive receptors to increased pollutant concentrations, or exceed any evaluation criteria established by the SIP.

5.1.17 SOCIOECONOMICS

The socioeconomic effects described below, unless otherwise noted, are applicable to the entire proposed Project area, including both the Lake Champlain and Overland segments.

5.1.17.1 Effects of Construction

Population

Installation of the transmission cable across the Project area is estimated to range from 154 days to 51 days (1 to 8 miles per day, respectively) during the period of 2016 to 2018. An average of 140 direct construction jobs per year in Vermont would be required during that time (TDI-NE 2014a). This type of electric transmission project is specialized; therefore, the workforce is highly specialized and mobile. Specialized industry workers would be likely to relocate to the area temporarily for the duration of the construction; however, construction employment would be unlikely to result in the permanent relocation of workers to the area. Population levels within the Project area, therefore, are not expected to change because of the proposed Project.

Employment
Direct jobs are those jobs that are involved in the actual construction of the project. Indirect jobs are jobs created by the businesses that provide necessary goods and services to the construction of a project. Induced jobs are created by the increased spending of the associated wages and salaries of the direct and indirect employees. The construction of the proposed transmission cable across the Project area would generate two types of direct jobs: specialized and non-specialized. The specialized workers most likely would not come from the local workforce. Local labor would be sought for non-specialized jobs such as construction services, traffic management, and logistical support. This would temporarily increase demand for workers and create jobs for local construction industry laborers. An average of 140 workers would be sought from Vermont during the construction period, and an additional 40 would be sought from the rest of New England. This labor should be available from the counties in the proposed Project-area ROIs; approximately 7.9 percent of the employment across the counties in the proposed Project area comes from the construction sector.[41] Therefore, it is likely that the existing construction industry would meet the non-specialized direct workforce demands of the proposed NECPL Project.

Taxes and Revenue
Tax revenues, including sales taxes from construction expenditures (e.g., transmission cable equipment, new converter station equipment) and property tax revenue paid during the construction period, would increase tax receipts and revenue for local municipalities. The purchase of construction materials for the proposed Project would be sourced locally where available and appropriate. Sales tax revenue during the construction period is estimated to be approximately $31 million. Property taxes paid on the construction work are estimated to total $12 million (Singer 2014). In addition, hiring construction workers in the surrounding area would increase local tax receipts and revenue in this segment.

Housing
Workers would be hired locally along the proposed Project route; the existing construction industry should be able to meet most of the Project workforce demands during the construction phase. The small number of specialized workers could come from areas outside the community and would likely be housed in either hotels or short-term rental properties. Although the vacancy rates in parts of the Lake Champlain Segment are relatively low (5 percent in Chittenden County), available temporary housing supplies across the rest of the Project area would easily accommodate any additional short-term increase in housing demand. Because the Project would be buried, no long-term impacts to property values would be expected.

5.1.17.2 Effects of Operations, Maintenance, and Emergency Repairs

Population
Because relatively few direct permanent jobs would be required for the operational phase of the proposed Project, operation, maintenance, and emergency repairs of the transmission cables would likely not lead to an influx of new residents to the proposed Project area.

The approximately 20 employees required for the operational phase could be hired locally or could move in from outside the area. Either way, the increase would have no significant effect on the population of the area.

Employment
The effect on employment of the operational phase of the proposed Project is expected to be small compared to the effect of the construction phase. The Project would be expected to create

[41] Source: United States Census Bureau. American Fact Finder. http://factfinder2.census.gov/

approximately 20 jobs in Vermont annually over the 40-year life of the Project (Singer 2014). These jobs would include monitoring, control, and support activities for the operations and maintenance activities of the Project, as well as regulatory compliance. Given this small number of jobs created, the existing workforce within the Project area would be able to meet the employment demands of the operational phase of the Project.

Taxes and Revenue

Tax revenues during the operational phase would include property tax revenue to municipalities, corporate income taxes paid to the state government, and lease payments made to the state for use of state roads and ROWs. Property taxes during the operational phase would be paid to 14 Vermont towns and are expected to average $7 million annually over the life of the NECPL Project. Corporate taxes paid are estimated to be more than $300 million paid over the life of the Project (NECPL 2014). Lease payments totaling an estimated $21 million would be made to the VTrans throughout the life of the Project for use of Vermont-owned road and railroad ROWs. The Project would generate non-tax revenue for the Project area and the state of Vermont, including funding for public projects and reductions in electric rates. Public Good Benefit Funds would be established in four different categories: VELCO Ratepayer Benefits, Lake Champlain Phosphorous Cleanup, Lake Champlain Trust Fund, and Vermont Renewable Programs. Per an agreement with the Conservation Law Foundation on May 29, 2015, TDI-NE agreed to revise the public benefits plan contained in its Vermont section 248 filing such that the combined monetary value of the Lake Champlain Phosphorus Cleanup Fund, Lake Champlain Enhancement and Restoration Trust Fund, and the Vermont Renewables Programs Fund is at least 75 percent greater than the combined value as initially proposed. The sum of these three funds as originally proposed under the section 248 Petition was $162 million over a 40 year period, and the revised sum of the three funds would be at least $283.5 million over the same period. The parties agreed to cooperatively develop a payment schedule that provides for greater annual payments during the initial years of operation, provided that the total Net Present Value of the benefit payments would remain the same, using TDI-NE's weighted average cost of capital. (TDI-NE 2015a).

Furthermore, annual reductions in wholesale market prices for electrical energy would be expected to occur throughout the state of Vermont during the operational period, which would reduce the economic burden on the local Vermont economy. Electricity cost savings would be expected to extend to the other New England states. Electricity cost savings to Vermont residents over the first 10 years of the Project's operational period are estimated to total $134 million. Wholesale savings are expected to be $178 million during the same period (Testimony of Seth G. Parker December 8, 2014). Reductions in residential electric rates could indirectly affect local economies in the Project area by contributing to increased consumer spending.

Housing

The Vermont construction industry should be able to meet most of the Project workforce demands during the operational phase (estimated 20 jobs annually). A small number of specialized workers could come from areas outside of the community and probably would need to be housed in either hotels or short-term rental properties. Effects on the local housing supply would be negligible because the number of incoming workers would be so small. Available temporary housing would easily accommodate any increase in housing demand resulting from jobs created during the operational phase. Because the Project would be buried, no long-term impacts to residential property values would be expected.

5.1.18 ENVIRONMENTAL JUSTICE

5.1.18.1 Effects of Construction

The effects of construction of the Lake Champlain Segment of the proposed NECPL transmission cable on human health and the environment would be temporary and would occur in an aquatic environment, away from populations residing within the ROI. The effect of construction would be minimal for all populations, including, minority and low-income populations and are further described in ***Section 5.1.13***-Public Health and Safety, ***Section 5.1.16***-Air Quality, and ***Section 5.1.17***-Socioeconomics, and Appendix J. Steps would be taken to avoid, minimize, or mitigate potential effects. These include, but are not limited to, the coordination of Project installation with commercial operators in Lake Champlain so as to not adversely affect their businesses.

5.1.18.2 Effects of Operations, Maintenance and Emergency Repairs

The effects of operation and maintenance of the Lake Champlain Segment of the proposed transmission cable would occur less frequently and be of shorter duration than those of Project construction. The transmission cable would be sited entirely underwater and would not be close to populations residing in the ROI. Effects from noise and emissions produced from vessels used for maintenance and repair activities would be small because they would occur on an intermittent and infrequent schedule. Therefore they would not have a disproportionate adverse effect on minority and low-income populations. Electric and magnetic fields would be reduced by burying the cable and by using DC technology. No human health effects of exposure to magnetic fields that would be emitted by the proposed transmission cable have been identified.

5.2 OVERLAND SEGMENT

5.2.1 LAND USE

5.2.1.1 Effects of Construction

Construction of the proposed Project in the Overland Segment is anticipated to be consistent with applicable land use plans and policies. Because the transmission cable would be located within road and railroad ROWs and would be compatible with surrounding land uses, its operation would be consistent with potentially relevant local plans and policies. No need for easements from landowners is anticipated for this section.

Construction of the Project would be along road and railroad ROWs and may result in brief disturbances of surrounding land uses within the ROW during the 3-year construction period. Although residences are scattered along the roads in the Project area, most of the roads that would be used for construction traffic are used for through traffic. Construction of the overland route would cause lane closures, road detours, and the presence of construction work areas and equipment. These disturbances would last for the duration of the active construction in any given location, which is estimated to average from a few days to 2 weeks at any one location. The construction schedule would be established to minimize disruption of land uses along the roadways; timely information would be provided to affected property owners or tenants regarding construction activities. Communication would be coordinated with VTrans and local officials. Effects on overland land uses would be further minimized by installing construction signs and barriers in accordance with applicable Vermont highway regulations and design standards. Restoration of the roadway ROW, driveways, and landscaped areas would be designed in consultation with VTrans, municipal officials, and adjacent landowners.

The proposed Project route would cross roadways along certain locations in the Overland Segment ROI. Paved road crossings would be completed using HDD or jack-and-bore methods, thereby minimizing disturbance of road use. If HDD is not used to span a road, lane restrictions could be implemented, causing temporary traffic disturbances.

Overland installation activities would require temporary staging areas, causing short-term effects on local land uses. These staging areas would be within commercial or industrial areas wherever possible to minimize effects on non-compatible land uses. Additional support workspace could be required at areas such as HDD staging areas, cable jointing locations, areas with steep slopes, or areas where access roads must be constructed. To the extent possible, these larger workspace areas would be sited within the existing road ROWs and limited to the minimum space necessary. If additional workspace outside the road ROWs is required, some land could be temporarily converted from its current use to construction-related uses. Previously disturbed or undeveloped areas would be used wherever possible, to minimize effects. All temporary storage areas or workspace areas would be re-graded and revegetated as required upon completion of their use.

The effects of construction vehicles on overland land uses is expected to be relatively minimal because construction workers would be dispersed throughout the proposed Project area. The number of construction vehicles at any one location would not add noticeably to the existing number of vehicle trips on any given section of roadway. Construction zones would be managed in accordance with a Maintenance and Protection of Traffic (MPT) Plan, which identifies procedures to be used to maintain traffic. In accordance with the MPT Plan, construction-related vehicles parked within roadway ROWs would not affect existing parking resources in the vicinity of the proposed Project; the MPT Plan would maintain sufficient parking and access at all times. For further information on effects on transportation, see the ***Transportation Section 5.2.2***.

Construction phase activities would temporarily affect land uses near the vicinity of the new Ludlow HVDC Converter Station. During peak construction months, an average of 50 trucks per day would be required to transport equipment and materials to the new HVDC Ludlow Converter Station. The duration of the Ludlow construction is expected to be approximately 18 months. During that time, construction workers' vehicles and material deliveries would access the site through local roads, causing an increase in traffic in the area. Deliveries would be coordinated with municipal officials to minimize effects on traffic flow and the surrounding community.

5.2.1.2 Effects of Operations, Maintenance, and Emergency Repairs

Operation, maintenance, and emergency repairs would have little or no effect on land use in the Overland Segment because the proposed transmission cables would be underground within existing ROWs. Maintenance activities in these ROWs could include actions such as removing trees to protect terrestrial transmission cables from being disrupted or broken by tree roots, maintaining the functionality of stormwater management features, and replacing system markers as necessary. Since the ROWs are previously disturbed areas, little or no effects is expected. Periodic inspections of the transmission cable ROW would be conducted with passive visual or instrument assessments, which would not affect land uses. The effects of any emergency repairs would be similar to those described for construction, albeit for a shorter duration and within a smaller footprint. A project-specific ROW management plan would be developed in consultation with local and state transportation officials to ensure consistency with continuing maintenance plans and operations.

5.2.2 TRANSPORTATION AND TRAFFIC

5.2.2.1 Effects of Construction

Construction of the proposed NECPL Project along roadway ROWs may result in temporary (i.e., for the duration of construction) disturbances of surrounding land uses within the ROW. Some of the roads that would be used during construction are currently used for through-traffic transportation. From the Lake Champlain exit point in Benson, Vermont, the transmission cable would be buried in public ROWs or on private property controlled by VTrans. The transmission cable is proposed to cross under Rouses Point (US 2) and the Lake Champlain Bridge (VT 17) crossings of Lake Champlain. The approximate lengths in public ROW controlled by VTrans (2014) are:

- Town roads east to Route 22A (4.3 miles);
- VT 22A ROW south from Benson to Fair Haven (8.2 miles);
- US 4 ROW east from Fair Haven to Rutland (17.4 miles);
- US 7 ROW south from Rutland Route 103 in Clarendon (2.7 miles);
- VT 103 ROW south to railroad ROW in Shrewsbury (3.8 miles);
- Green Mountain Railroad Corporation railroad ROW south to VT 103 in Wallingford (3.5 miles);
- VT 103 ROW south/southeast to VT Route 100 in Ludlow (10.6 miles);
- VT Route 100 north to Town roads in Ludlow (0.8 miles);
- Town roads to proposed new HVDC converter station (4.5 miles); and
- Town roads from Ludlow to existing VELCO Coolidge substation in Cavendish, VT (0.6 miles).

Temporary use of the roads would last for the duration of active construction and would cause lane closures and road detours due to the presence of construction work areas and equipment. The duration generally would be from a few days to up to 2 weeks at any one location. The construction schedule would be established to minimize disruption (i.e., disturbances, interruptions, or changes) of land uses along the roadways TDI-NE would inform affected property owners and tenants of construction activities and schedules and coordinate with VTrans and local officials. Installing construction signs and using barriers in accordance with applicable Vermont highway regulations and design standards would minimize effects on drivers. Restoration of the roadway ROW, driveways, and landscaped areas would be designed in consultation with VTrans, municipal officials, and adjacent landowners. The cable sections would arrive at the proposed construction sites via truck or rail. Construction workers would use local roadways to get to and from contractor yards or the railroad ROW, deliver supplies directly to the construction site, or transport equipment (e.g., dewatering pumps, generators, excavators) directly to the site. Transportation of materials for the proposed Project would not affect the transportation network (TDI-NE 2014a).

Construction occurring adjacent to railroads would involve several different methods because of the various elevations at the railroad ROW. During train movement, all personnel and equipment would remain outside the safety zone. Close coordination with the railroad companies during the equipment delivery and installation stages of the proposed Project would assist in avoiding or minimizing conflict with railroad operations. Work within the railroad ROWs would be kept outside of specific embankment areas to avoid affecting the continuous use of rail tracks.

The proposed Project route would traverse various municipal and state roads. Generally paved roads would be crossed using HDD or jack-and-bore methods. Lane restrictions could result if HDD is not used to span a road. These traffic disturbances would be temporary and would last only for the duration of construction of that particular crossing (TDI-NE 2014a).

On municipal gravel roads, traffic would be limited in some areas. For example, some areas of the road would require road closures; other areas would allow for limited local traffic for ingress/egress to private property, and still other areas would permit one-way traffic to be maintained. On municipal paved roads, some areas would require road closures with limited local traffic; in other areas, one-way traffic would be required. On state highways, one-way traffic would be required in some areas, and two-way traffic would be allowed in other areas. On limited access highways, lane width would be reduced to accommodate construction traffic in some areas, and one highway lane and a breakdown lane would be used for construction traffic in other areas.

Construction workers would be dispersed throughout the Project area; therefore, the number of construction vehicles at any one location would cause no significant increase in the number of vehicle trips. Construction-related vehicles parked within roadway ROWs would not affect any existing parking resources in the vicinity of the Project. Construction zones would be managed in accordance with a MPT Plan, which would identify procedures to be used to maintain traffic and provide a safe construction zone for activities within the roadway ROW and to maintain sufficient parking at all times. Construction vehicles supporting transmission cable installation activities in roadway ROWs would be parked within construction zones (TDI-NE 2014a).

Approximately 50 trucks a day would be required to transport equipment and construction materials to the new Ludlow HVDC Converter Station site during peak construction periods. Construction at the new converter station is anticipated to take approximately 18 months. Construction workers' vehicles and material deliveries would access the site through local roads. Although the number of construction-related vehicles in the immediate area at any one location is anticipated to be greater than currently experienced, deliveries would be coordinated with municipal officials to minimize effects on traffic flow and the surrounding community (TDI-NE 2014a).

Construction of the proposed NECPL Project would be consistent with applicable land use plans and policies (TDI-NE 2014a).

5.2.2.2 Effect of Operations, Maintenance, and Emergency Repairs

In general, operation of the proposed Project would not affect transportation because the transmission cables would be underground within existing, previously disturbed ROWs, and would require little maintenance. Operation of the Project in the Overland Segment would be consistent with land use plans and policies and compatible with traffic and transportation in the affected areas because the transmission cable would be primarily within existing established ROWs (TDI-NE 2014a).

TDI-NE would develop a Project-specific ROW Management Plan in consultation with VTrans and local road officials to ensure conformance with its maintenance plans and operations. Any maintenance or operational activities would be performed in accordance with the applicable conditions of highway work permits, use and occupancy permits, leases, and other agreements (TDI-NE 2014a).

Emergency repairs could affect transportation similarly to construction of the Project, but for a shorter duration and within a smaller area. Even fewer transportation and traffic disruptions would occur if repairs are needed in undeveloped areas along the road ROWs. The ERRP would be implemented in the event of emergency repairs. Temporary disruptions of the transportation system due to emergency repairs could include short-term suspension of road operations in the area of the repairs and longer travel times. Vehicular traffic flow would be maintained through emergency repair work zones (TDI-NE 2014a).

During normal operations, the new Ludlow HVDC Converter Station would require no personnel on site; therefore, the new converter station would have no effect on parking resources or traffic flow. During maintenance activities, a small number of vehicles and personnel would be required on the site. Inspections and maintenance at the new Ludlow HVDC Converter Station would have no effect on transportation and traffic because the activities would be confined to the new HVDC converter station site. Emergency repairs at the new HVDC converter station would require the presence and operation of repair personnel and equipment (TDI-NE 2014a).

5.2.3 WATER RESOURCES AND QUALITY

5.2.3.1 Effects of Construction

Surface Water and Water Quality

In this segment, transmission cables would be buried beneath the ground in roadway ROWs. Trenching and soil stockpiling may cause a temporary increase in erosion and runoff into surface waters; however, impacts from erosion or runoff would be minimal because control measures would be required. The proposed Project route would cross several streams and rivers, including Otter Creek, which is listed in the NRI. Several options are available for installing the proposed transmission cable across streams, including trenching and HDD and across Lake Bomoseen using HDD. Intermittent streams that are dry would be crossed only by open cut with prior approval of state and federal agencies, as required by permit conditions. Where perennial or other substantial stream flows are present, a dry-ditch method would be used to isolate the work area from the flow of water. These crossings typically would be completed by installing cofferdams upstream of the work area and either diverting the stream flow into one or more flume pipes or pumping water around the construction area. This diversion would temporarily alter the natural flow of the surface water. Depending on site-specific requirements and constraints, HDD would be used at other locations along the proposed transmission line route to minimize effects on sensitive resources. During the HDD process, drilling fluid containing bentonite could leak into surface waters. TDI-NE would develop and implement an ERRP to facilitate timely cleanup of any bentonite leaks and ensure minimal effect on the environment; HDD would have less effect on water resources than trenching and dry-ditch crossings because no surface waters or stream channels would be disturbed.

Vegetation clearing, ground disturbance, and trenching along the roadway ROWs would increase the potential for soil erosion and associated effects on the water quality of nearby surface waters. Erosion and increased sedimentation in stormwater runoff would occur in active construction areas but would be managed with BMPs included as part of the EPSC plan, which would incorporate Vermont standards and specifications. Stormwater management features and strategies (e.g., French drains, inlet protection, dewatering, site stabilization, and reseeding) would be implemented in accordance with the EPSC plan. The EPSC plan would contain detailed maps depicting contours, slopes, drainage patterns, and locations of erosion-control structures. ***Appendix G*** provides a list of specific measures that TDI-NE has proposed to minimize effects on water quality, including use of an Environmental Inspector responsible for monitoring construction activities to ensure compliance with all regulatory requirements.

Floodplains

Installation of the proposed transmission cable and related construction activities (e.g., vegetation clearing, ground disturbance, trenching, soil stockpiling) would result in temporary effects on floodplains within the Overland Segment. The transmission cable would be installed 3 to 4 feet below ground, and the surface would be returned to its preexisting level following construction. Construction BMPs would include erosion and sedimentation controls and prohibitions on storing or refueling

construction equipment in floodplains. Restoring the surface to its original grade would minimize effects on flood flows, flood storage, and flood hazards.

The new Ludlow HVDC Converter Station would be constructed and operated outside of the 100-year floodplain. Construction activity and vegetation clearing that would occur within this area is not expected to affect flood flows, storage, or hazards during the construction period.

After installation and construction activities are complete, no permanent aboveground alterations or new impervious surfaces that could affect the functions of the floodplain would result from operation of the underground transmission cable; therefore, operation and maintenance of the Overland Segment of the transmission cable would not affect floodplains.

Groundwater

Blasting of bedrock may be required to install the proposed transmission cable at some locations along the Overland Segment and to construct the new Ludlow HVDC Converter Station. Blasting may cause short-term, local effects on groundwater quality because it could increase bedrock fracturing, change the local hydrology, and temporarily increase turbidity in nearby groundwater sources. All applicable industry standards would be followed to control blasting and blast vibration limits as specified in TDI-NE's blasting plan (TDI-NE 2015). TDI-NE supplemented its initial blasting plan with BMPs recommended by the VANR. TDI-NE committed to not use perchlorates during blasting activities and in the unlikely event that more than 5,000 cubic yards need to be blasted in a single work zone, TDI-NE would evaluate potential impacts to groundwater from such blasting (TDI-NE 2015). Nearby landowners would be notified of blasting activities.

In some locations, HDD may be used to avoid affecting sensitive resources. If any drilling fluid should leak during the HDD process, it could percolate to groundwater. Bentonite clay is a solid that is denser than the water used to make drilling fluid. As the drilling fluid percolates through the soil, it would filter bentonite clay particles from the fluid. The bentonite clay would aggregate in soil pore spaces and would not enter the groundwater; therefore, HDD operations would not adversely affect groundwater.

5.2.3.2 Effects of Operations, Maintenance, and Emergency Repairs

No adverse effects on water resources would be expected during operation or maintenance of the transmission cable because there would be no change in water quality, water availability, or elevation in floodplains. Ground disturbance associated with uncovering and repairing damaged cables could affect water quality temporarily because of the potential for erosion and sedimentation to nearby surface water. The surface water of streams or rivers would be disturbed if the segment of the transmission cable that crosses beneath the stream or river bed is damaged and requires repairs. Although the frequency of emergency repairs cannot be predicted, and the repair time would vary, repairs probably would be infrequent and brief (i.e., less than 30 days), and effects would be limited to the immediate vicinity of the repair site. The effects would be similar to those described for original installation, but duration would be a shorter, and the area of disturbance would be smaller. Permanent stormwater management practices at the new Ludlow HVDC Converter Station would be developed to meet the VDEC Stormwater Management Rule and Manual.

5.2.4 AQUATIC HABITATS AND SPECIES

5.2.4.1 Effects of Construction

The proposed NECPL Project route intersects with an estimated 52 perennial streams and 72 intermittent streams. Six construction methods are proposed for installing the transmission line across waterbodies and small streams, although TDI-NE will consider others (TDI-NE 2014a):

- **Aerial Crossing**. At aerial crossings, the transmission cable would be suspended above the stream being crossed in two locations where the fascia of an existing bridge or the headwall of an existing culvert provides a suitable face for attachment and the structure owner allows this configuration.
- **At Culvert Crossing**. Where feasible, the Project proposes to complete "At Culvert" crossings by excavating a trench within the roadway or within the embankment adjacent to the roadway and installing the transmission cable a minimum of five feet beneath the existing culvert.
- **Over Culvert Crossing**. At over culvert crossings, the proposed cable would be installed in the roadway embankment above an existing culvert.
- **Duct Bank Crossing.** At one location, a duct bank is proposed to be installed beneath the road surface in conjunction with a VTrans roadway improvement project.
- **HDD.** Using this method, cable conduits would be installed under the streambed, avoiding any disturbance of the streambed, and the cables would then be pulled through the conduits.
- **Open Trench Excavation.** The open cut method of construction involves deploying temporary in-stream flow diversion structures, digging an OTE across the stream channel, installing the transmission cable, backfilling with suitable materials, and restoring the stream bank and channel bottom. This category includes dam and pump crossing and open cut.

The specific stream crossing method would be selected with prior approval from state and federal agencies as required by permit conditions. Intermittent streams that are dry at the time of crossing would be crossed only by open cut with prior approval from state and federal agencies as required by permit conditions.

Aquatic Habitat and Vegetation

No significant effects on SAV are expected because the transmission cable would be installed beneath perennial streambeds and lakebeds using dry-ditch methods or HDD. Any SAV affected by dry-ditch methods (e.g., flume crossing, dam-and-pump crossing) would be expected to recolonize following installation of the transmission cable.

Bentonite slurry used as a drilling lubricant during HDD could leak into the waterways and smother SAV in the immediate area. Development and implementation of an emergency response plan would allow for timely cleanup of any bentonite slurry leaks that may occur and would minimize adverse effects on the environment.

Shellfish and Benthic Communities

Sediment disturbance, settlement of disturbed sediments, trenching, water quality degradation, and release of hydrocarbons all could affect shellfish and benthic communities at stream crossings in the Overland Segment. These effects are not expected to be significant because the proposed transmission cable would be installed primarily beneath streambeds using HDD or dry-ditch methods accompanied by implementation of EPSC measures. Any crossings involving communities affected by dry-ditch methods would be expected to be recolonized following installation. Development and implementation of an emergency response plan would allow for prompt clean-up of any bentonite slurry leaks that may occur during HDD and for minimizing adverse effects on the environment.

Fish
Resuspension of sediment, increased turbidity, and hazardous spills could affect fish in the immediate downstream portions of streams crossed by the Overland Segment. The effects of increased turbidity would be minimized because the transmission cable would be installed primarily beneath streambeds using dry-ditch methods or HDD. Fish would be expected to temporarily vacate the site of the crossing at the initial stages of dry-ditch installation. `

5.2.4.2 Effects of Operations, Maintenance, and Emergency Repairs

No significant effects on aquatic habitat and species are expected to result from maintenance activities because periodic inspections would be of short duration and would use remote sensing equipment. If a fault occurs in a section of the transmission cable that crosses a waterbody that was not installed by HDD, the cables may need to be excavated for repair. The effects of such emergency repairs, if required, would be similar to those during initial construction, but of shorter duration, over a smaller area.

Aquatic Habitat and Vegetation
Magnetic fields are not expected to significantly affect SAV in waterbodies crossed by the transmission cables, and the increases in sediment temperature associated with operation of the transmission cable would be less than 1.8°F at the sediment surface and less than 0.01°F in the water column directly above the cables. Such temperature increases would be negligible given the greater seasonal fluctuations in water temperatures. The area of sediment affected by this slight increase in temperature would be extremely local (i.e., directly over the cables), and any effect on SAV that may be present would be negligible.

Shellfish and Benthic Communities
The effects of operation of the transmission cable at waterbody crossings would be associated with temperature increases and magnetic and induced electric fields and would be the same as those described for the Lake Champlain Segment (***Section 5.1.4.2***).

Fish
The effects of operation of the transmission cable at waterbody crossings would be associated with temperature increases and magnetic and induced electric fields and would be the same as those described for the Lake Champlain Segment (***Section 5.1.4.2***).

5.2.5 AQUATIC PROTECTED AND SENSITIVE SPECIES

5.2.5.1 Effects of Construction

Federally Listed or Protected Species
No federally-protected aquatic species are present within the Overland Segment; therefore, no adverse effects due to installation activities of the proposed transmission cable are anticipated.

State-Listed Species
Effects on state-protected aquatic species occurring in waterbodies and small streams traversed by the Overland Segment generally would be avoided by using HDD techniques. The proposed transmission cable would be pulled through conduits installed beneath the streambed using HDD to avoid disturbing the benthic environment. No streambeds with state-protected species within the Overland Segment would be disturbed; therefore, no protected aquatic species would be affected by installation of the transmission cables.

5.2.5.2 Effects of Operation, Maintenance, and Emergency Repairs

Federally Listed Protected Species
No federally-protected aquatic species are present within the proposed Overland Segment; therefore, no adverse effects due to operation, maintenance, and emergency repair activities of the transmission cable are anticipated.

State-Listed Species
Effects on protected aquatic species occurring in waterbodies and small streams traversed by the Overland Segment generally would be similar to those described for non-protected species (***Section 5.1.4.2***).

5.2.6 TERRESTRIAL HABITATS AND SPECIES

5.2.6.1 Effects of Construction

Construction activities in the Overland Segment would result in temporary and permanent removal of vegetation, trampling of vegetation by heavy construction equipment, root damage associated with excavation, soil compaction, and generation of dust. Transmission cables would be constructed within existing ROWs; therefore, most vegetation along the Overland Segment has already been disturbed and is maintained periodically by towns or VTrans maintenance operations. Areas temporarily disturbed during cable installation would be re-planted with native vegetation following construction to minimize the establishment of invasive species.

Some areas of existing forest may be disturbed temporarily or permanently converted to herbaceous or shrub habitats in select locations along the proposed Project route. Most of the proposed Project is collocated with existing ROWs, which would limit the potential to adversely affect natural forested habitats. The construction, including compaction by heavy construction equipment, and subsequent habitat conversion, would occur primarily in fringe habitat along existing ROWs, where noise, emissions from cars, ROW maintenance (e.g., mowing), and human activity in general already influence habitat suitability. Finally, corridor construction would affect only a small percentage of habitats available for wildlife; mobile species that currently inhabit and prefer these areas would likely relocate temporarily to similar habitat and return following construction.

Removing vegetation along stream banks may reduce bank stability and increase erosion. Temporary absence of vegetation prior to re-establishment may shift the dominant species present. The proposed Project route in the Overland Segment would cross several streams, rivers, and wetlands, and TDI-NE would implement measures to stabilize disturbed stream banks and re-establish vegetation to limit potential effects on riparian habitat, as discussed in ***Section 5.2.4.1***.

Field surveys identified four new, potentially significant communities and five natural communities that are likely to be significant in the proposed Project area (TRC 2014). Eight of these areas would require clearing along the periphery of the forested habitat, adjacent to existing ROWs. This clearing would result in the conversion of 5.51 acres of forested habitat to herbaceous communities; however, of that total only 0.79 acres would be permanently converted to herbaceous and low-growing shrub communities. The remaining 4.72 acres would be allowed to revegetate. (TRC 2014). ***Table 5-6*** presents the proposed clearing amounts within identified communities along the Overland Segment.

Proposed construction activities would occur primarily along road ROWs; therefore, wildlife in the vicinity would be habituated to frequent disturbances associated with roadway traffic. Noise associated with construction activities may result in temporarily reduced communication ranges for wildlife,

interference with predator/prey detection, or habitat avoidance. Blasting (where required) may result in temporary behavioral changes, disorientation, or hearing loss in wildlife. Terrestrial species' response to noise may depend on noise type (i.e., continuous or intermittent), prior exposure to noise, proximity to the source, stage in the breeding cycle, activity (e.g., foraging), age, and gender. Prior exposure to noise is the most important factor determining the response of wildlife to noise because wildlife may become accustomed (or habituated) to noise. The rate of habituation to short-term construction noise is not known, but most proposed construction activities would occur where the level of ambient noise is already high. Wildlife that may be affected include grassland birds, forest birds, reptiles, amphibians, and mammals (TDI-NE 2014a).

As currently proposed, the proposed Project would avoid tree removal in all potential deer wintering areas (DWA) with the exception of one limited area immediately adjacent to Vermont Route 103. In this area, a narrow swath of trees adjacent to Vermont Route 103 would be removed for construction and operation of the Project. This would include approximately 0.32 acres of temporary tree removal and 0.29 acres of permanent tree removal. No adverse impacts to this potential DWA would occur from this limited tree removal along an existing highway corridor as the interior of the DWA would remain undisturbed (TRC 2014). There is potential for temporary displacement of deer and potential mortality of deer being hit by vehicular traffic; however, this would not be expected to be greater than existing deer mortality resulting from traffic incidents during non-construction. A potential black bear travel corridor adjacent to Vermont Route 103 near the Mount Holly and Ludlow town line would be crossed by the proposed Project. As a result, tree removal may be required along the Vermont Route 103 corridor in this area to install and operate the cable within the ROW. Tree removal would not affect critical Bear Production Habitat since the habitat in the ROI is currently fragmented and disturbed due to traffic and human activities. The temporary construction activities may temporarily impede movement of black bear during construction but would not have permanent effects on the travel corridor (TRC 2014). Similar to the deer, there is potential for temporary displacement of bear and potential mortality of bear being hit by vehicular traffic; however, this would not be expected to be greater than existing bear mortality as a result of traffic incidents during non-construction.

5.2.6.2 Effects of Operations, Maintenance, and Emergency Repairs

Increases in soil temperature (***Section 3.2.9***), directly over the transmission cable (approximately 1.8 °F) during Project operation may result in minor alterations of terrestrial vegetation and habitats. Soil temperature would increase only within the maintained ROW. Electric fields around the operating cables are not anticipated to affect terrestrial vegetation or habitat. The magnetic field is expected to typically be a maximum of 276 mG directly above the cables when they are trenched and to decrease with distance from the transmission cable centerline. The transmission cables would produce no electric field at the ground surface. The magnetic field would decrease as the distance from the transmission cable centerline increased. Magnetic fields related to the operation of the proposed Project are expected to have no adverse effects on vegetation or habitat (TDI-NE 2014a).

The transmission cable, within the permanently cleared 12 foot ROW, would be inspected and maintained periodically; maintenance would involve removing woody vegetation that could damage buried cables. The maintenance ROW for vegetation clearing would occur within a 12 foot wide permanent project corridor (TRC 2015). The goal of the maintenance program would be to ensure the establishment of vegetation with shallow root systems (i.e., herbaceous species). Occasional clearing may result in effects on vegetation and habitat, but the Overland Segment is located mostly within currently maintained ROWs, and much of the habitat is already highly disturbed (e.g., mowed and maintained).

Emergency repairs of the proposed transmission cable, if required, could result in removal of vegetation and crushing by repair equipment. Only vegetation at the repair site would be disturbed. The ROW would be restored following completion of repairs, and vegetation would be allowed to return to its prior state. Any emergency repairs undertaken would occur within areas previously disturbed by the original installation of the transmission cable.

Maintenance of the transmission corridor would result in a permanently maintained scrub-shrub or herbaceous habitat in which all woody vegetation is minimized. Transmission corridors would be mowed and maintained as they were prior to construction. Wildlife species may be displaced by periodic vegetation clearing and mowing. These activities would occur for the life of the proposed Project but would be only a periodic, temporary disturbance. If heavy equipment is required for clearing or other maintenance, it may displace wildlife or result in mortality to less mobile species (e.g. turtles) in addition, it may crush ground vegetation, damage roots, and compact the soil.

TABLE 5-6 PROPOSED CLEARING IN POTENTIALLY SIGNIFICANT COMMUNITIES ALONG THE OVERLAND SEGMENT

MP	Site Name	Natural Community	State Rank	Temporary Tree Removal (Acres)	Permanent Tree Removal (Acres)
112.0	Green Dump Hills	Dry Oak-Hickory-Hophornbeam Forest	S3	0.01	None
114.5	Pine Pond West	Temperate Hemlock- Hardwood Forest	S4	0.99	0.32
115.0	Pine Pond East	Temperate Hemlock Forest	S4	0.33	0.01
117.0	Blueberry Hill	Mesic Maple-Ash-Hickory-Oak Forest	S3	0.93	0.09
119.3	Mount Hanley West	Mesic Maple-Ash- Hickory-Oak Forest	S3	0.35	0.02
120.4	Mount Hanley East	Mesic Maple-Ash-Hickory-Oak Forest	S3	0.91	0.13
121.3	Twin Mountain	Mesic Maple-Ash-Hickory-Oak Forest	S3	0.57	0.01
122.6	Herrick Mountain NE	Mesic Red Oak-Northern Hardwood Forest	S4	1.28	0.21
135.1	Mill River, Railroad	Sugar Maple-Ostrich Fern Riverine Floodplain Forest	S1	None	None
S1 - Very rare (Critically imperiled): At very high risk of extinction or extirpation due to extreme rarity (often 5 or fewer populations or occurrences), very steep declines, or other factors					
S2 - Rare (Imperiled): At high risk of extinction or extirpation due to very restricted range, very few populations (often 20 or fewer), steep declines, or other factors					
S3 - Uncommon (Vulnerable): At moderate risk of extinction or extirpation due to restricted range, relatively few populations or occurrences (often 80 or fewer), recent and widespread declines, or other factors					
S4 - Common to uncommon (Apparently secure): locally common or widely scattered to uncommon, but not rare; some cause for long-term concern due to declines or other factors; or stable over many decades and not threatened but of restricted distribution or other factors					
S5 - Common (Secure): widespread and abundant					

Source: TRC 2014

Noise associated with emergency repairs of the transmission cable, if required, may temporarily reduce communication ranges, interfere with predator/prey detection, or cause wildlife to avoid the area. Vegetation removal and alteration of habitat could result in the permanent displacement of species; however, the areas that may be affected by emergency repairs would be relatively small and would have been disturbed during the original construction of the proposed Project (TDI-NE 2014a).

5.2.7 TERRESTRIAL PROTECTED AND SENSITIVE SPECIES

5.2.7.1 Effects of Construction

Federally Listed or Protected Species

According to the VANR (2004), portions of northwestern Rutland County within the Overland Segment include potential and known summer habitat for the Indiana bat; however, much of the Overland Segment is adjacent to road ROWs or other open and disturbed lands that lack suitable habitat for the species. Although construction noise would occur in the Overland Segment ROI, Indiana bats and northern long-eared bats using the ROI currently occur in proximity to active road corridors and most likely are already habituated to fluctuating noise levels. TDI-NE has proposed measures to avoid and minimize effects on potential roosting trees, including retention of vegetative buffers or selective removal of vegetation. If large live or dead trees with peeling bark (e.g., shagbark hickory), or trees larger than 3 inches in dbh (as preferred by the northern long-eared bat) are located, site-specific removal prescriptions would be implemented because the northern long-eared bat and Indiana bat prefer tree characteristics such as loose or shaggy bark, crevices, and hollows over a specific tree species for roosting. Potential Indiana bat roosting trees would be avoided by construction and operation of the proposed Project, and should removal of potential roosting trees be required, a Phase 2 assessment for bats would be completed (i.e., visual and/or acoustic bat exit surveys and assessment of the surrounding area for appropriate alternative roosting sites) (TRC 2014). Based on the implementation of these measures and avoidance of potential roosting trees, the proposed Project may affect, but is not likely to adversely affect the Indiana bat or the northern long-eared bat. Additional protection proposed by TDI-NE were included as part of an agreement with the VANR, and are detailed in ***Appendix H***.

Potential bald eagle breeding habitat occurs in the Overland Segment at Old Marsh Pond (Fair Haven), Lake Bomoseen (Castleton), Lake Ninevah (Mt. Holly), and Rescue Lake (Ludlow) (TDI-NE 2014a). The Overland Segment ROI would be primarily within existing road ROWs where the vegetation is primarily low-lying herbaceous or scrub-shrub vegetation. Preferred nesting trees, which are large deciduous or coniferous trees, generally are not present in the ROI; consequently, bald eagles are not expected to roost or nest within the ROI. Although bald eagles may fly over the ROI when traveling among the large water bodies located in the surrounding areas, they would be unlikely to use the habitats within the ROI, except transiently. TDI-NE would work with federal and state agencies to implement measures to avoid and minimize adverse effects on bald eagles and their habitat. If construction were to occur within 660 feet of an active nest during the nest-building or breeding season (December to August), TDI-NE would contact FWS and VFWD according to FWS National Bald Eagle Management Guidelines (FWS 2007) to obtain guidance for avoiding and minimizing potential effects of construction noise. Construction personnel and the environmental inspector would be trained to identify bald eagles and their nests and instructed to report any sightings of potential nests not identified previously. TDI-NE would work with federal and state agencies to establish measures to be taken if any previously unidentified eagle nests were to be discovered during construction. These measures may include discontinuing work within 660 feet of the nest, reporting the findings to the VFWD and FWS, and consulting with them for guidance to avoid or minimize the potential for adverse effects (TDI-NE 2014a).

State-Listed Species

State-listed plant species, three endangered and six threatened, are located within the Overland Segment ROI. The identified species all occur within the maintained VTrans "clear zone" and are subjected to regular mowing and maintenance that is not related to the proposed Project. Minimization and avoidance measures in the proposed design include the use of HDD and reconfiguration of the route and workspace. Protection measures for plants located within the Overland Segment ROI include pre-construction flagging of listed species, training in plant identification, post-construction monitoring, and special vegetation management during construction and operation. Proposed utilization of HDD and route and workspace re-configurations would avoid all protected, state-listed plants; therefore, no state-listed threatened or endangered plants within the Overland Segment would be adversely affected as a result of the proposed Project (TRC 2014).

The little brown bat may occur in many habitats along the Overland Segment ROI. The proposed limited tree removal along existing road and rail ROWs and at the converter site may displace bats, but would not imperil either species because they could use many alternative habitats in the vicinity of the proposed Project. The proposed Project may affect, but is not likely to adversely affect little brown bats within the Overland Segment ROI.

The eastern rat snake and timber rattlesnake may occur within the Overland Segment ROI, and proposed construction activities may adversely affect these species by crushing or trapping individuals within exposed trenches. Protective measures would be implemented in areas within 1,000 feet of the five documented rare snake occurrences within the ROI as well as at major (i.e., named) rivers. Specific protection measures include covering open trenches, inspecting trenches for trapped snakes, having qualified biologists remove trapped snakes, notifying the VFWD if timber rattlesnakes are captured, and using loosely woven (non-plastic) erosion control matting. Based on the proposed protection measures, the proposed Project may affect, but is not likely to adversely affect the eastern rat snake and the timber rattlesnake.

The Overland Segment ROI crosses several areas that may provide habitat for the upland sandpiper. The proposed Project may affect upland sandpipers; however, in the locations near potential upland sandpiper habitat, the Overland Segment is collocated along the maintained Vermont Route 22A corridor and noise and disturbance related to the roadway currently exist. Sandpipers may move away from construction areas to adjacent habitat and return once activities cease. If a nest is located close to construction, adult sandpipers may abandon eggs or young. The area is a maintained transportation ROW; therefore, if upland sandpipers are present, they should be accustomed to activity associated with ROW maintenance and road traffic. The proposed Project may affect, but is not likely to adversely affect the upland sandpiper.

Migratory Birds

Effects on migratory birds are expected to be minimal, as a result of installing the proposed transmission cable; however, potential adverse effects on migratory birds and their habitats include effects resulting from noise related to trenching, machinery, and vegetation clearing. Birds within the Overland Segment ROI are expected to temporarily move into similar adjacent habitats during a typical construction period of up to 2 weeks in any given location and to return to the area after construction is completed. Effects may include abandonment of eggs or young in nests built in habitats immediately adjacent to the construction activities. Permanent displacement of an entire breeding population is unlikely as vegetation clearing would occur largely within existing disturbed or fringe habitat.

Some limited loss of woodlands may occur due to tree clearing that may be required along the edge of the Overland Segment ROI in forested areas. The affected habitat represents a small percentage of the habitat available to migratory bird species in the region. No significant habitat fragmentation is

expected because proposed construction would occur within or adjacent to existing, previously disturbed ROWs. Most of the affected vegetation would be in the fringe habitat along roads, which is subject to frequent mowing, noise, and vehicle emissions. TDI-NE has proposed measures to reduce effects on migratory birds, including avoiding sensitive habitats.

5.2.7.2 Effects of Operations, Maintenance, and Emergency Repairs

Federally Listed or Protected Species

Minimal effects are anticipated to result from magnetic fields produced by operating the transmission cable. Buried cables, such as those proposed for the Project, would have no electric fields at the ground surface, and the constant magnetic field would decrease with distance from the transmission cable centerline. Magnetic field deviations diminish with distance from the NECPL cable. The calculated magnetic field deviations within 25 feet from the centerline of the cables for the majority of the Overland Segment are less than 8.9 percent of the ambient geomagnetic field level. For the remaining route, the highest calculated magnetic field deviations within 25 feet from the centerline of the cables are less than 18 percent of the ambient geomagnetic field level (Exponent 2014). Although some species of wildlife can detect EMFs, the relatively small changes in magnetic fields associated with operating the proposed Project would not affect the behavior of federally protected species (TDI-NE 2014a). Both the Indiana bat and northern long-eared bat would likely be able to detect the magnetic field and heat generated by the transmission line during operations; however, there is no evidence to suggest magnetic fields projected for the proposed NECPL Project would result in any adverse effects. Buried cables, such as those proposed for the NECPL Project, would have no electric fields at the ground surface and the constant magnetic field for much of the overland segment would be less than 8.9 percent of ambient levels. In addition, these levels would decrease substantially within 25 feet from the transmission cable centerline. As such, the predicted magnetic field and heat associated with the transmission cable would not result in any adverse effects on the health, behavior, or productivity of animals. Magnetic fields resulting from the operation of the proposed Project would not adversely affect bald eagles (TDI-NE 2014a).

Maintenance activities would occur in area of previously disturbed herbaceous and shrubby cover. Vegetation along the transmission cable ROW would be managed primarily by brush-hogging and mowing or hand-cutting to maintain the desired height of vegetation. Noise and dust created by mowing may affect roosting or foraging northern long-eared bats or Indiana bats for a short time, but mowers would pass quickly. Vegetation within the transmission cable ROW would be maintained to a height of less than 20 feet. Vegetation taller than 20 feet would not be allowed to become established in the ROW, so no potential location for bald eagle nests or roosting trees for bats would occur in the affected area.

Effects on the Indiana bat, northern long-eared bats, or and bald eagle associated with emergency repairs of the transmission cable in the Overland Segment, if necessary, would be similar to those occurring during construction, but would be of shorter duration and would affect a smaller area.

State-Listed Species

Operation of the transmission cable would result in a slight increase in soil temperature directly above the transmission cable. Soil temperature would increase by approximately 1.8°F, which may alter terrestrial vegetation and habitat. Heat would dissipate quickly within a short distance from the transmission cable, and affected areas would be limited to the maintained ROW. Electric and magnetic fields would not affect protected plants or animals because the fields would not occur at the ground surface.

Vegetation clearing required to maintain the ROW and vehicle and foot traffic may crush, kill, or damage state-listed plants and wildlife (i.e., eastern rat snake and timber rattlesnake) located within the Overland Segment ROI. A vegetation management plan and proposed minimization measures would mitigate most effects on protected plants and animals. Protective measures would be implemented in areas within 1,000 feet of the five documented rare snake occurrences within the ROI as well as at major (i.e., named) rivers. Specific protection measures include covering open trenches, inspecting trenches for trapped snakes, having qualified biologists remove trapped snakes, notifying the VFWD if timber rattlesnakes are captured, and using loosely woven (non-plastic) erosion control matting. Vehicle and foot traffic associated with vegetation maintenance in the ROW and emergency repairs, if necessary, may affect state-listed birds (i.e., upland sandpiper) by temporarily displacement.

Migratory Birds

Vehicle and foot traffic associated with maintenance and emergency repair activities may displace migratory birds and result in a temporary affect migratory birds. Vegetation maintenance or emergency repair activities in the Overland Segment may occur during breeding and nesting season, which could disrupt breeding and nesting behavior. Implementation of proposed avoidance and minimization measures, which include avoiding sensitive habitats, would reduce the potential for adverse effects.

5.2.8 TERRESTRIAL WETLANDS

5.2.8.1 Effects of Construction

Physical Characteristics and Functions

Construction may affect freshwater wetlands occurring along the 56 miles of the Overland Segment; affects would be primarily temporary. The proposed construction activities would result in 3.76 acres of direct temporary effects and 0.74 acres of secondary impacts within the proposed Project corridor; 1.95 affected acres occur within forested wetlands. Surface hydrology in 4.01 acres of disturbed wetland areas would be re-established by backfilling the transmission cable trench, restoring the surface to pre-construction contours, and re-establishing vegetative cover (TRC 2015). ***Table 5-7*** lists the proposed effects on wetlands and wetland buffers.

TABLE 5-7. PROPOSED EFFECTS ON WETLANDS AND WETLAND BUFFERS WITHIN THE PROJECT AREA

	Direct Temporary Impacts			Secondary Impacts	Total Impact	Proposed Class II Wetland Buffer Impacts		
	Trenching/ Earthwork	Forested Areas	Non-Forested Areas	Forest Conversion		Temp Impacts	Perm Impacts	Total Buffer Impacts
Impact Total (acre)	0.79	1.21	1.76	0.74	4.5	9.91	1.18	11.09
	3.76							

Source: TRC 2015; TRC 2015- TDI-NE New England Clean Power Link Project Vermont Wetland Permit Application

The construction sequence within wetlands along the proposed route typically would begin with clearing vegetation within the construction corridor and removing and stockpiling the upper 18 inches of hydric soils, followed by excavating a trench approximately 3.5 feet deep and up to 9 feet wide at the surface. The transmission cables would be placed in the trench, and then the trench would be backfilled. Land restoration would include placing the removed wetland topsoil at the top of the excavated trench area to facilitate wetlands restoration, and the disturbed area would be mulched or hydro-seeded. Restoration of wetlands would be completed expeditiously after completion of backfilling (TDI-NE 2014a).

Wetlands would be affected primarily by vegetation clearing and alteration of upland and "wetland adjacent areas" within the construction corridor. Disturbance in and adjacent to wetlands would result in temporary changes of local wetland hydrology and water quality during grading and trenching. Vegetation within wetlands would be removed during construction, which would result in a temporary loss of wetland vegetation. In some cases (0.74 acres of affected wetlands), construction may result in permanent direct and secondary (indirect) impacts on wetlands through conversion of wetland cover (i.e., forested wetlands converted to emergent wetlands). Most wetlands occur within maintained and cleared ROWs along existing transportation routes. Local increases in turbidity or filling within the wetland may occur due to eroded soil from disturbed areas being transported into adjacent wetlands. TDI-NE proposes to install silt fencing, minimize disturbed areas, backfill trenches and re-establish vegetative cover to reduce the occurrence of erosion and sedimentation (TDI-NE 2014a).

Changes in topography or soil texture (e.g., replacing a clay or organic soil with a sandy soil along the trench) or compaction of the adjacent soils along the proposed Project route could affect wetland hydrology. The restored ROW would be returned to approximately the same grade that existed prior to construction; therefore, long-term effects on surface hydrology would be minimal. In general and whenever practical, construction equipment would be operated primarily from the road ROW or other upland areas. Additional effects may occur where heavy construction equipment would be operated within wetlands or required to cross wetland areas to get from one location to another. TDI-NE would use equipment mats or low-ground-pressure tracked vehicles to minimize soil compaction if construction equipment is operated within the temporary workspace of non-forested wetlands (i.e., 1.76 acres) (TRC 2015). If dewatering is required within the excavated trench, water would be discharged to a well-vegetated upland area, a properly constructed dewatering structure, or a filter bag. Original surface hydrology would be re-established in disturbed wetland areas by backfilling the trench and grading the surface to original contours. Replacement fill would be placed around the proposed transmission cables when the surrounding soil does not have low thermal resistivity (i.e., areas with wet clay, silt, organic matter) or is otherwise physically unsuitable to be used as backfill (e.g., contains large rocks). In this situation, native soils would be excavated and replaced with appropriate backfill materials. The stockpiled native wetland topsoil would be placed on the surface of the excavated wetland area at the same grade and elevation as surrounding wetlands to match local surface hydrology and drainage patterns.

Groundwater hydrology may be maintained by use of trench plugs (i.e., sand bags installed in the trench before backfilling at the base of any steep slopes adjacent to water bodies and wetlands) along the transmission cable trench to prevent groundwater from flowing preferentially along the cables and through the thermal backfill (TDI-NE 2014a).

An emergency response plan would be developed to minimize the effects of accidental leaks and spills during the proposed construction in wetlands. Construction crews would have sufficient supplies of absorbent and barrier materials on site to contain and clean up hazardous materials in the event of a spill. To reduce the likelihood of a spill entering wetland habitat, TDI-NE would avoid storing hazardous materials, chemicals, or lubricating oils; refueling vehicles and equipment; or parking

vehicles overnight within 100 feet of the edge of a wetland, unless no reasonable alternative is available. The 100-foot buffer is detailed in TDI-NE's New England Clean Power Link Project Overall Oil and Hazardous Materials Spill Prevention and Contingency Plan, February 2015, and complies with state and local laws. Buffer distances required to adequately filter pollutants depend on slope and vegetation type. For non-point sources, recommended buffers in agricultural settings range from 25–50 feet (Grismer et al. 2006). In the Vermont wetland program, Class One wetlands require a 100-foot protective buffer. Based on the ability of vegetated buffer strips to filter pollutants (as described in Grismer et al. 2006) and state wetland standards for high quality wetlands, 100 feet was selected as a buffer distance for wetland riparian areas to allow filtration following an accidental spill. If no alternative is available, TDI-NE would adopt appropriate protection measures for spill prevention and control, such as implementation of an emergency response plan (TDI-NE 2014a).

Disturbance of wetland habitat and clearing of vegetation for the proposed Project would result in short-term reduction of wetland functions, which may include sediment, toxicant, and pathogen retention; nutrient removal, retention, and transformation; production (nutrient) export; and wildlife habitat. In some cases water quality functions may be permanently reduced because forested cover often provides increased transpiration of groundwater during the growing season. In most cases, vegetation would be expected to re-establish itself quickly once the transmission cable ROW is stabilized and restored. Over the course of the first growing season, the initial vegetation to re-establish itself would be fast-growing herbaceous species; woody species would return over a longer period of time.

Because the Project does not include the permanent loss of wetland habitat and potentially affected wetlands occur along existing roadway ROWs that have been disturbed previously, the impacts to wetlands values of recreation, education/scientific, uniqueness/heritage, and visual quality would be limited or non-existent. Based on the 2014 wetland delineation, 14 wetlands provide rare, threatened, or endangered species habitat functions based on the VWR Section 5 Functional Criteria (VHB 2014). These habitats may be affected during and immediately following construction. No long-term adverse effects on wetland values are expected because permanent effects on wetlands already have occurred in relatively disturbed areas (e.g., transportation ROWs). The proposed Project ROW would result in no permanent loss of open space, however; the new HVDC converter station would result in a permanent loss of four to five acres of open space and the clearing of five to six additional acres for grading (TRC 2015). Physical, hydrologic, and ecological characteristics are expected to return to preconstruction conditions following the completion of construction and the restoration of the construction corridor. No adverse effects on wetlands would occur during construction of the aboveground facilities because wetlands are not present at the new HVDC converter station location.

Habitat and Species

Expected effects on wetland habitats would include temporary disturbances during construction (e.g., trenching, soil mixing and removal of vegetation) and permanent conversion of forested wetlands to emergent and scrub-shrub wetlands. The conversion of forested wetland to scrub-shrub is expected to be minimal because the proposed Project is within existing road ROWs. Wildlife that inhabits forested wetland and species that prefer trees more than 20 feet tall would likely avoid the area, or relocate to other forested wetlands. Once conversion to the scrub-shrub wetland has occurred, species that prefer wetlands with trees that are less than 20 feet tall would be expected to return to the area in time; however, the species mix would likely be different (e.g., fewer shade tolerant species and more shade intolerant species) and some species may not return..

Mature trees would be removed from the area within the permanent ROW for the proposed transmission cable during construction, thus reducing the canopy cover. Reduction of the tree canopy would temporarily increase the amount of sunlight reaching the wetland until scrub-shrub cover is established. Increased light penetration may result in a slight, temporary increase in summer water temperatures,

growth rates of vegetation (including algae), and subsequent increases in BOD. In addition, the amount of organic matter (e.g., tree leaves and other detritus) falling or washing into wetland areas would be reduced, which may result in reduced food sources for bacteria, fungi, amphipods, and filter feeders.

Following construction, TDI-NE would grade to restore original contours and would seed disturbed wetland areas with an appropriate seed mixture to stabilize soils and provide native vegetation cover until native species could re-establish. Approximately 4.5 acres of emergent and forested wetland vegetation would be expected to re-establish quickly following construction, and woody species would return more slowly (i.e., two or more growing seasons).

Because the proposed Project would result in permanent conversion of forested wetlands to PSS wetlands, elimination of trees greater than 20 feet from those wetland areas could result in permanent loss of wildlife habitat value. The USACE Vermont In-Lieu Fee Program would be used to mitigate for the proposed and temporary change in cover type of forested wetlands by the Project. Mature trees require a long time to re-establish; therefore, temporary clearing of forested vegetation could represent a long-term effect on wildlife habitat until woody vegetation is re-established. Trees would not be allowed to become established directly over the transmission cable (i.e., 12 foot operation ROW), which would result in a permanent change in vegetation. No population-level effects on wildlife and no effects on the regional distribution or abundance of wildlife would be expected because of the distribution and availability of similar forested habitat along the proposed Project route that would be undisturbed.

Potential effects of stormwater runoff and sedimentation would be avoided or minimized through the use of BMPs (e.g., silt fences). TDI-NE would work with the USACE and state of Vermont on appropriate BMPs. Increased sedimentation and stormwater runoff into wetlands could affect water quality by temporarily increasing turbidity levels. Degraded water quality and disturbed habitat may affect species such as small fish, filter feeders and other benthic organisms. Any pollutants carried by stormwater runoff could enter wetlands more easily because the reduction in vegetation cover would provide a less effective buffer between the wetlands and upland areas. If the original topsoil is used to backfill trenched areas within wetlands, and previous plant cover consisted of invasive species such as purple loosestrife and reed canary grass, then those invasive species would most likely become re-established in that area, making establishment of native species difficult. Projects that result in ground disturbance are often the cause of the spread and establishment of invasive species because construction equipment and workers' foot wear and clothing can carry seeds and root material. To reduce the likelihood of introduction and spread of invasive species, a management, monitoring, and control plan has been developed to control noxious weeds (USACE 2014). TDI-NE also developed an invasive species monitoring plan in cooperation with VANR (TDI-NE 2015). Post-construction monitoring would occur in targeted areas to minimize the effects of invasive species on important natural resources. These areas include wetlands and buffers, riparian buffers of perennial streams, significant natural communities, rare species populations (and 25 foot buffers), shorelines (and 100 foot buffer), and conserved lands. Monitoring and control would minimize the potential for invasive species establishment. Monitoring would occur for three years following the construction of the transmission cable but potentially up to five years if required by the State of Vermont or USACE. If control is needed, manual control methods would be the preferred method (i.e., cutting, pulling, or up-rooting); in if manual control is not feasible or effective, herbicide may be used to control species (TRC/VHB 2014). Construction equipment would be cleaned prior to entering and upon exiting any wetland area to avoid spreading invasive plant seeds and root materials.

Temporary disturbances caused by noise and heavy equipment used during construction would have no significant effects on wetland species. Species in the vicinity should be habituated to frequent disturbances associated with the operation of roadway traffic. Most wetland plant species in the vicinity of construction activities would be expected to recover once construction activities cease. Some

wildlife species would avoid the area during construction activities and return afterwards; however, many reptiles and amphibians that use these wetland habitats are not mobile enough to move away from the construction. Similarly, some fish species use wetlands, particularly emergent wetlands that occur along the proposed Project route. These species could incur some mortality during construction. Most of these effects would be either temporary or intermittent and, because of the small area affected, would not be expected to affect reptiles, amphibians, or fish at the population level (i.e., only a few individuals may be affected relative to the entire population).

5.2.8.2 Effects of Operations, Maintenance, and Emergency Repairs

Physical Characteristics and Functions

Operation, maintenance, and emergency repairs of the proposed Project would not significantly affect the physical characteristics and functions of wetlands. Thermal changes within surface water or near-surface groundwater resulting from operating the transmission cable would be mitigated by thermal backfill, which would dissipate any heat generated by the transmission cable. Vegetation management activities would include periodic removal by cutting, either mechanically or by hand. Maintenance activities would not change wetland hydrology, compact wetland soils, or otherwise alter the physical characteristics and functions of wetlands within the Overland Segment. Vegetation clearing would occur only within wetlands that were permanently affected by construction of the transmission cable.

Trenching or excavation may be required to repair damaged cables. These activities would only occur if needed and would require applicable federal, state, and local permits. Any effects of these emergency activities would be similar to those during the initial construction, but the duration would be shorter duration and a smaller area would be affected.

Habitat and Species

No adverse effects on wetland habitats and species would be expected to result from operation or inspection of the proposed transmission cable because inspection activities would be non-intrusive. Wetland vegetation would be maintained to prevent establishment of woody species taller than 20 feet. Management and maintenance activities, such as mowing, would not alter the habitat of the transmission cable ROW, other than precluding the growth of large trees within the 12 foot maintenance ROW. In areas where forested wetland is converted to shrub-dominated or herbaceous wetlands, a change in wetland structure and function that would affect wetland habitat and species use would occur. For example, species that use tree cavities would find reduced habitat in situations where mature forested wetlands are converted to shrub- and herbaceous-dominated wetlands. Wetland habitat that re-establishes itself naturally following construction would be maintained over the life of the transmission cable. Above ground facilities would have no adverse effects on wetlands because the new HVDC converter station would be developed in an area without wetlands.

If emergency repairs should be required, trenching or excavation may be required to repair damaged transmission cables. These activities would occur only if needed and would require applicable federal, state, and local permits. Any effects of these emergency activities would be similar to the effects of initial construction, but the duration would be shorter and the affected area would be smaller. Following any disturbance, the affected area would be seeded and mulched. Following repair activities, it may take up to a year or more for wetland habitats to re-establish vegetation. In these cases wildlife use of the wetland may be limited until wetlands return to pre-disturbance conditions. Repairs could increase the potential for additional spread of invasive species. Invasive species management, as described in the vegetation management plan (TRC/VHB 2014), would be implemented in the event that ground disturbance is required for any repair activities.

5.2.9 GEOLOGY AND SOILS

5.2.9.1 Effects of Construction

Physiography and Topography
Trenching would be required for installing the proposed transmission cable, resulting in temporary, local changes in surface grading. Following cable installation, disturbed areas would be graded to match the original topography and to be compatible with local drainage patterns, except at locations where permanent changes in drainage would be required to prevent erosion that could expose the buried cable. There are no anticipated changes to waters of the United States.

Geology
In areas where shallow bedrock is encountered and identified during visual inspection and appropriate equipment, TDI-NE would remove some bedrock to install the proposed transmission cable at the proper depth. Removal methods could be mechanical or explosive depending on site conditions. Removing the surface layer of bedrock would affect local geology. Cracking of bedrock during blasting or excavation could alter drainage patterns and allow stormwater to infiltrate deeper, particularly in areas with hard bedrock, such as the Green, Taconic, and Berkshire mountains. Blasting activities would adhere to all industry standards applicable to control of blasting and blast vibration limits.

Soils
Construction activities would temporarily disturb soils associated with the trench and the adjacent construction area. Vegetation removal, trenching, soil stockpiling, and backfilling activities affect soil locally and could result in temporary erosion and sedimentation. Following any necessary vegetation clearing, TDI-NE would install EPSC measures. A Project EPSC Plan would be developed to elaborate on construction phase stormwater management, implementation of EPSC measures, and other BMPs (TRC 2014b). TDI-NE would reduce and minimize tree clearing within the ROW during the Project design phase.

The transmission cable would be installed in a trench within existing, pre-disturbed roadway and railroad ROWs. Excavated soil would be stockpiled and stabilized adjacent to the worksite or would be transported off site, if onsite storage is not possible. After installation, the trench would be backfilled with the excavated soil, if appropriate, or with well-graded sand to fine gravel, stone dust, or crushed stone with low thermal resistivity; excess soil would be disposed of at a certified facility. A protective cover of HDPE, concrete, or polymer blocks would be placed directly above the backfill material, marker tape would be placed above the cover, and native soils (including topsoil) would be returned in the reverse order in which they were excavated to finish the backfilling process. Areas of exposed soil would be seeded and mulched (or overlaid with seed with rolled erosion-control product) to stabilize and restore the ground cover (TRC 2014b).

Soil adjacent to the trench may be compacted under the weight of construction equipment. Compacted soils and increased impervious surfaces would result in decreased soil permeability, which could alter local drainage patterns and impede stormwater infiltration. Compaction could reduce the soil's capacity to produce vegetative biomass.

HDD technology would be used at certain stream, road, lakes, and railroad crossings within the Overland Segment. Use of HDD would reduce soil erosion and sedimentation compared to traditional trenching techniques. At each HDD site, soil would be excavated and held on site until the drilling process is complete, and then would be used to restore the site to its previous grade. TDI-NE estimates that approximately 100 cubic yards of drill cuttings (used bentonite and excess soil) would be generated for disposal at the two major HDD water-to-land transition areas combined along the proposed

transmission cable route. HDD locations at stream, road, lakes, and railroad crossings would have a significantly smaller footprint and effect. The EPSC Plan and other environmental permitting documents would outline the BMPs for working in and near streams and wetlands to ensure minimal effects on the water resource.

Temporary construction areas would be cleared, and some grading would be required to support construction equipment and transmission cable installation methods. Construction entrances and exits would be stabilized to reduce tracking of sediment onto public roadways. After installing the cable, the temporary construction area would be re-contoured to approximate preconstruction conditions, seeded, and temporarily stabilized with mulch or a rolled erosion-control product to promote soil stabilization and plant regeneration (TRC 2014b).

Temporary staging and work areas would be used in various locations to store construction equipment and materials. These staging and work areas would be located near the roads in areas that require minimal vegetation alternation or grading and would avoid sensitive environmental resources to the extent possible. Staging and work areas would not be located within waters of the United States. Entrances and exits would be stabilized to control tracking of sediment onto public roadways. Following construction, these areas would be re-graded, seeded and stabilized (TRC 2014b).

Approximately 4-5 acres (10 acres total for the associated grading) would be permanently cleared for the new Ludlow HVDC Converter Station, access road, and associated workspaces and graded areas. Construction phasing would follow the EPSC Plan to address the potential for erosion during construction. In addition, the converter station would require TDI-NE to obtain a permit related to stormwater management during operation (TRC 2014b).

Seismicity

Construction of the proposed Project would not increase the risk of seismic hazards. The overall probability of seismic activity in the Overland Segment is small (USGS 2014).

5.2.9.2 Effects of Operations, Maintenance, and Emergency Repairs

Physiography and Topography

Operation and maintenance of the proposed transmission line would not affect physiography and topography in the Overland Segment. Emergency repairs of the transmission line would result in effects similar to but less than those described for initial construction because a smaller area would be disturbed for a shorter period.

Geology

Operation and maintenance of the proposed transmission line would not affect geology in the Overland Segment. No effects on geology would be expected from emergency repairs in the Overland Segment because bedrock removal would be not be necessary.

Soils

Operation of the proposed Project would slightly elevate the temperature of soil immediately surrounding the cable. Vegetation along the ROW would be maintained to prevent the establishment of trees and their associated roots close to the transmission line; however, routine ROW mowing or tree-clearing activities could expose soil to minor erosion from wind and water. Such activities would be short-term but would occur multiple times over the operating life of the transmission line. Emergency repairs of the transmission line could result in increased erosion and sedimentation that are similar to but much less than effects described for construction activities because a smaller area would be disturbed for a shorter period.

Seismicity

Project operation would not increase the risk of seismic hazards; however, a seismic event could damage the proposed HVDC transmission cable. The proposed HVDC transmission cables are insulated, armored, and designed to withstand the mechanical forces experienced during cable installation, which are substantially greater than those of a seismic event. The inherent flexibility of the transmission cables would allow the buried cable to shift and deform slightly with ground movements associated with seismic events.

If a transmission cable failed due to a seismic event or other cause, the protection system would de-energize the transmission system in approximately 33 milliseconds. HVDC transmission cables dissipate very limited energy under short circuit (i.e., fault) conditions; therefore, no direct effects on the environment or public safety would be anticipated. A cable repair would be implemented as appropriate following any failure due to a seismic event.

5.2.10 CULTURAL RESOURCES

Ground-disturbing activities associated with installing the proposed transmission cable could result in adverse effects on historic properties in the APE (defined in ***Section 5.1.10***). The APE contains four known terrestrial archaeological sites, and four Field-Identified Archaeological Resources. In addition, 19 historic architectural properties are listed in the State Register or NRHP, and four historic architectural properties have been recommend eligible for the State Register and NRHP. Among these 23 properties, 3 are historic districts, and 20 are individual properties. Regarding the state listed Fullam and Mott residential structures, TDI-NE would, prior to any sale, transfer of property or other conveyance of historic sites owned by TDI-NE within the Project area, request a review by the VTSHPO and have appropriate deed restrictions in place prior to disposition of a property (TDI-NE 2015).

The Overland Segment APE contains 11.6 linear miles of archaeologically sensitive land within the transmission cable route, and four of the five proposed work parcels are considered archaeologically sensitive. All archaeologically sensitive areas in the APE of the Overland Segment that are subject to the proposed Project-related effects would be evaluated during a Phase IB archaeological survey. The goal of the Phase IB survey would be to locate, identify, and evaluate previously recorded and unrecorded archaeological sites within the archaeologically sensitive areas identified during the Phase IA survey. The results of the Phase IB survey would be reviewed by the VTSHPO and would assist TDI-NE in compliance with NHPA Section 106 and with Vermont state cultural resources regulations.

5.2.10.1 Effects of Construction

Ground-disturbing activities would disturb the context of artifacts in archaeological sites in the APE. For archaeological sites that are eligible for listing in the NRHP, this could constitute an adverse effect under 36 CFR 800.5(a)(1). TDI-NE would implement a Phase IB archaeological survey of areas that are both archaeologically sensitive and subject to Project construction in order to locate, identify, and evaluate archaeological resources within the APE. Consultation regarding potential adverse effects on historic properties through the NHPA Section 106 process is in progress and a Final PA has been distributed to the VTSHPO and concurring parties. TDI-NE also developed an agreement with the VTSHPO to address overland archaeological and cultural resources (***Appendix I***).

The proposed transmission cable would be buried underground and would avoid any standing structures; consequently, the adverse effects of construction along the linear portions of the Project would be limited to exposure to temporary noise, dust, and vibrations and short-term visual effects associated with the proximity of construction activities and equipment. These activities would not

require mitigation. In addition, the proposed Project contains five work parcels, one of which (in Ludlow) would be the site of a new Ludlow HVDC Converter Station. A new standing could have an adverse visual effect on surrounding historic properties; however, the new Ludlow HVDC Converter Station would be constructed on an undeveloped wood parcel screened by heavy tree cover and would not be visible to or from any historic property (Olausen and Barry 2014).

Laydown/staging areas have been selected at properties controlled by TDI-NE in Alburgh, Benson and Ludlow. These properties were evaluated for archaeological sensitivity by PAL as part of the Phase 1A study (November 2014). Any additional laydown/staging areas along the proposed route would be identified prior to construction and TDI-NE would conduct all appropriate studies in accordance with the stipulation signed with the Vermont Division for Historic Preservation. This stipulation identified that no Project ground disturbance would occur in any known historic site or archaeologically sensitive area prior to the completion of all required studies and the implementation of any necessary mitigation measures.

5.2.10.2 Effects of Operations, Maintenance, and Emergency Repairs

The operation and inspection of the proposed transmission cable in the Overland Segment would take place in an area that has already been disturbed, and would not adversely affect terrestrial archaeological sites within the APE. The Overland Segment would involve an underground transmission line; therefore, operations would not adversely affect historic architectural properties within the APE. The construction, operation, and maintenance of the proposed new Ludlow HVDC Converter Station would have no visual effects on historic architectural properties.

Vegetation maintenance activities and emergency repairs, if necessary, would occur in areas previously disturbed by construction of the transmission cable and, in some cases, in areas selected purposefully to avoid cultural resources sites; therefore, such activities are not expected to have adverse effects on these sites.

5.2.11 INFRASTRUCTURE

5.2.11.1 Effects of Construction

Electrical Systems

Overhead and underground electrical lines have the potential to be affected where crossed by the proposed Project. Owners and operators of electrical lines crossed by the proposed NECPL Project, or within the Project construction corridor, would be consulted prior to installation. Adequate utility infrastructure protection measures at crossings would be developed in consultation with utility providers to limit potential interruptions of services.

Water Supply Systems

The Overland Segment ROI would include nine public water systems using groundwater sources that have either designated SPAs or public water sources within the immediate vicinity. Additionally, there are four small private well locations within the Overland Segment ROI. Blasting has the potential to create changes in local hydrology and temporarily increased levels of turbidity in nearby groundwater wells. Short-term localized impacts on groundwater quality could occur if blasting of bedrock is required. However, relative to the depth of a typical drilled well (generally 200 to 400 feet), the 5-foot depth of trenching and potential blasting is very small. TDI-NE has committed to not use perchlorates during blasting activities. If, in the unlikely event, that more than 5,000 cubic yards need to be blasted in a single work zone, TDI-NE would evaluate the potential impacts to groundwater from such blasting. Trench depth also minimizes the amount of blasting needed. The proposed Project would be located

within existing road ROWs where earthwork and grading has taken place previously, and would thus reduce the potential for disturbance to natural soils, geology, or groundwater flow. Blasting activities would be performed in strict adherence to all industry standards applicable to control of blasting and blast vibration limits as specified in the blasting plan prepared by TDI-NE and notification would be provided to potentially affected landowners (TDI-NE 2014a).

Stormwater Management

Stormwater management features and strategies (e.g., French drains, inlet protection, dewatering, and site stabilization and reseeding) would be implemented in accordance with an EPSC Plan. Existing stormwater infrastructure encountered within the Overland Segment ROI would be avoided or restored to previous conditions. In certain areas, the cable is proposed in roadside stormwater ditches. These ditches would likely be improved as part of construction.

Communications

Owners and operators of communication lines or infrastructure crossed by the proposed NECPL Project would be consulted prior to installation. Adequate telecommunication infrastructure protection measures at crossings would be developed in consultation with communication providers to limit potential interruptions of services.

Natural Gas Supply

No natural gas pipelines or infrastructure have been identified in the Overland Segment ROI. If natural gas infrastructure was discovered during construction activities, appropriate BMPs and avoidance/mitigation measures would be developed in consultation with utility providers.

Liquid Fuel Supply

No liquid fuel or other hazardous liquid pipelines or infrastructure have been identified in the Overland Segment ROI. If liquid fuel infrastructure was discovered during construction activities, appropriate BMPs and avoidance/mitigation measures would be developed in consultation with utility providers. The amount of fuel consumed as a result of Project construction is expected to be only a small percentage of the supply in the area.

Sanitary Sewer and Wastewater Treatment

Impacts to sanitary sewer lines would have the potential to occur where the proposed Project crosses these lines. Available information indicates that two sanitary sewer lines are located within the Overland Segment ROI. Owners and operators of sanitary sewer lines and wastewater treatment facilities crossed by the NECPL Project, or within the Project construction corridor, would be consulted prior to installation. Adequate utility infrastructure protection measures would be developed in consultation with utility providers.

Solid Waste Management

Soils excavated during Project construction would be temporarily stockpiled adjacent to the worksite or transported off-site should on-site storage is not possible. Where soil is stockpiled on site, it would be stabilized with erosion and sedimentation controls. Following completion of the proposed transmission cable installation, the excavated area would be backfilled, regraded and revegetated as necessary. Once construction is complete, all debris and equipment would be removed from the site and recycled to the maximum extent feasible and the remainder disposed of at an approved solid waste facility, and the disturbed area would be returned to its previous condition to the extent practicable (TDI-NE 2014a).

5.2.11.2 Effects of Operations, Maintenance and Emergency Repairs

Electrical Systems
As discussed in ***Section 3.1.13,*** the ISO-New England's *2014 Regional System Plan* identifies several challenges for maintaining system reliability for the 10-year planning horizon. The 2014 Regional System Plan notes that New England has become an "energy constrained system" due in part to heavy dependence on natural-gas-fired generation and the planned retirement of generation resources. The proposed NECPL Project would provide increased supply capacity and reliable electrical power, helping to maintain system reliability and to aid in resolving the challenges presented in the 2014 Regional System Plan.

Proposed transmission cables would be designed to require limited maintenance once installed. The Project would use solid-state HVDC transmission cables that eliminate the potential for leaks. These transmission cables would contain protective layers designed to provide superior mechanical and corrosion protection, thereby reducing the need for repairs over the lifetime of the Project. The HVDC technology would immediately terminate the flow of electricity in the event the cable is compromised. Warning tape and protective material would be placed over the cables to reduce the chance for the transmission cable to be compromised. Overland cables would be inspected regularly to confirm system integrity.

The new Ludlow HVDC Converter Station is anticipated to be powered by electricity taken directly from the proposed NECPL Project transmission line. In the unlikely event that this is not possible, electric power from a local utility would be used. The town of Ludlow, which is expected to host the new HVDC converter station, has indicated that the Project would not affect its municipal services.

Water Supply Systems
No cooling stations would be required for the NECPL Project.

Stormwater Management
The operation and regular maintenance of buried transmission cables would not affect stormwater management features within the Overland Segment ROI. Emergency repairs to the NECPL Project would avoid existing stormwater infrastructure where possible. If alteration of existing stormwater infrastructure is unavoidable, these facilities would be replaced, relocated, or restored to previous conditions upon completion of Project repairs.

Communications
The Project would use HVDC technology and transmission cable designed to eliminate the potential EMFs that could affect communications equipment along the Overland Segment ROI. The new Ludlow HVDC Converter Station would be designed to meet the requirements of local radio, television, and telephone EMF limits (TDI-NE 2014a); therefore, no operational or maintenance effects on communications systems would be expected. Additionally, fiber communication may be made available to the VTrans for its broadband program.

Natural Gas Supply
No natural gas pipelines or infrastructure have been identified in the Overland Segment ROI; therefore, no operational effects would be anticipated for natural gas infrastructure. No equipment used to service and maintain Project components would consume natural gas.

Liquid Fuel Supply
No liquid fuel or other hazardous liquid pipelines or infrastructure have been identified in the Overland Segment ROI; therefore, no operational effects would be anticipated for liquid fuel infrastructure.

Vehicles and equipment used to service and maintain Project components would consume liquid fuel in small quantities; however, the Project would be designed to be relatively low-maintenance, and necessary maintenance activities would be expected to be of short-duration. Emergency repair activities would occur as needed.

Sanitary Sewer and Wastewater Treatment
Operation and maintenance of the NECPL Project would generate no wastewater; therefore, no effects on sanitary sewer and wastewater treatment systems would be anticipated.

Solid Waste Management
Project operation, maintenance, and repairs are anticipated to produce very small amounts of solid waste over the life of the Project. These amounts would not be expected to affect solid waste management infrastructure in the Project vicinity.

5.2.12 RECREATION

5.2.12.1 Effects of Construction

All impacts on recreation resources from construction activities in the Overland Segment would be temporary in nature. The construction of this segment of the Project would have minor impact on recreational activities and recreation users. There are several recreation facilities that are adjacent to the Overland Segment ROI but are not accessed from the ROI. These facilities include the Blueberry Hill WMA, located adjacent to U.S. Route 4, and the Okemo Valley Golf Club (located off Vermont Route 100 in Ludlow). There would be no physical effect on access to these two recreation areas; any effects would be aesthetic or acoustic in nature. Recreationists may see the Project construction and hear the noise associated with construction, but these effects would be temporary (measured in days less than one week in a particular location). Recreation users can access another area away from the immediate construction to avoid these effects.

After the transmission cable departs U.S. Route 7 south of Rutland, there are several recreation facilities that can be accessed from the ROI in the area between Rutland and the substation in Ludlow. There are several recreation facilities that can be accessed from the ROI in the Overland Segment. Lake Bomoseen is a popular boating spot located off U.S. Route 4 in Castleton; recreationists on the southern end of the lake would experience temporary disruptions of use when the transmission cable is installed by HDD under the water. There are two marinas with dock facilities and boat rentals in the ROI in this section; sights and sounds of construction would be apparent in the area of the lake near the construction. Other recreation facilities in the Overland ROI include the Long Trail, an end-to-end hiking trail in Vermont, which crosses the transmission cable route on Vermont Route 103 in Clarendon, three VAST snowmobile trails that cross the ROI, and the Okemo Mountain Resort a full-season ski and recreation facility located along Vermont Route 103 and Vermont Route 100 in Ludlow. Construction of the transmission cable on the roadways that access the recreation areas would result in short-term disturbances to these facilities during the three-year construction period. Construction activities would cause temporary, short-term disturbances to recreational access due to lane closures, road detours, and the presence of construction work areas and equipment. These disturbances would last in any given location for the duration of the active construction zone, which is estimated to average from a few days to two weeks at any one particular location. During the underground cable installation in the Overland Segment ROW, there would be increased traffic activity, due to the number of construction vehicles along the route. This may exacerbate the disturbance of recreational access. Recreationists may notice noise and visual disturbances during the construction activity periods; but these effects would be temporary (less than one week at any given location). For potential effects of noise and visual disturbances on recreation uses in the Overland Segment, see the ***Noise Section 5.2.14***.

All impacts to recreation activities and users from the construction phase of the proposed Project would be mitigated by communication and outreach activities. Local recreation facilities and other stakeholders would be notified of the timing of the transmission cable installation activities, to minimize disrupting recreational access.

5.2.12.2 Effects of Operations, Maintenance, and Emergency Repairs

Minimal to no impacts on recreation would be expected from ongoing operation of the transmission cable. Following construction, the transmission cable would not affect use of the recreation facilities in the Overland Segment, because it would be buried underground in road and railroad ROWs. No permanent aboveground facilities would be constructed along this segment of the proposed Project route that would affect recreational resources. Maintenance activities, such as cable inspections by visual equipment, would be expected to occur intermittently throughout the life of the transmission line but would not impact recreation facilities. If emergency repairs of the cable were required (e.g., recovering, splicing, and installing a new cable section), the disruptive effects would be similar to those that would occur during initial installation. These would be short in duration, however, and would be restricted to a discrete area of the Overland Segment ROI where the cable repairs would be required.

5.2.13 PUBLIC HEALTH AND SAFETY

5.2.13.1 Effects of Construction

The health and safety of contractors could be affected during construction periods, as described for a similar project proposed in New York in CHPE FEIS. The effects of the proposed Project on public health and safety would be the same as those of the CHPE Project, except that the NECPL Project would occur in Vermont. The portions of the CHPE FEIS that describe the effects of construction on public health and safety (Volume 2, pp 5-88 to 5-90) are incorporated here by reference.

Risks to worker's safety would be reduced by enacting HASPs and an Emergency Contingency Plan. The contractor would develop a HASP for each specific construction activity. The HASPs would identify requirements for minimum construction barriers and provisions for worker protection as required under the NESC and OSHA 29 CFR Part 1926, *Safety and Health Regulations for Construction*. The HASPs would contain information on hazard communication, identification, risk assessment, and other information required to perform the work safely, including a list of mandatory PPE that all construction personnel must wear.

Public Health and Safety
The risk to public safety during construction of the Overland Segment would be minimal. The HASPs filed by the general contractor would detail the requirements for construction barriers to ensure traffic safety during trenching. These barriers would be provided by the general contractor and enforced by state and local law enforcement agencies.

Magnetic Field Safety
The proposed transmission cable would not be powered during construction; therefore, it would not produce a magnetic field. No magnetic fields from the proposed transmission cable would affect safety during construction of the Project.

5.2.13.2 Effects of Operations, Maintenance, and Emergency Repairs

Contractor Health and Safety
Normal operating condition would cause little or no safety risk for contractors. That risk may increase during maintenance; however, it would be managed by adhering to federal and state safety regulations. The HASPs filed by the contractor would be followed throughout the life of the Project and would also require the general contractor and operator to identify appropriate worker safety conditions during maintenance activities. These HASPs would outline appropriate worker safety considerations and describe the mandatory minimum training qualifications for personnel performing these jobs.

Public Health and Safety
Operation of the Project would pose no risk to public health and safety because most of the cable would be buried underground. Elevated risk during maintenance could require alteration of traffic patterns. Before the Project begins operation, TDI-NE would record the location of the buried cables and join "Dig Safe". Regularly scheduled maintenance and inspections would reduce the risk of infrastructure failure.

Magnetic Field Safety
Electric and magnetic fields are present during the generation, transmission, distribution, and use of electrical energy (Aldrich and Easterly 1987). Studies have suggested that exposure to elevated EMFs may adversely affect health, particularly related to potential disturbances of cardiac pacemakers. Normal operation of the Project could induce EMFs in the environment and within organisms that cross into its field; however, the opposed polarity and sheathing of the Project would cancel and reduce most if not all of the EMFs produced by the cable.

Results of a numerical study that calculated the expected magnetic field for the Overland Segment suggest that the fields would diminish quickly with increased distance from the cable (Exponent 2014a). Change in the ambient geomagnetic field level would be limited to the area immediately surrounding transmission cables, and DC magnetic field deviations would fall off rapidly with distance. At 25 feet on either side of the cable centerline, the maximum deviation from the ambient geomagnetic field would be less than 18 percent (Exponent 2014b). The strongest DC magnetic field expected to occur anywhere along the overland portion of the route would be approximately 1,660 mG, which is less than 0.4 percent of the 4,000,000 mG public exposure limit for DC magnetic fields recommended by the ICNRP (Exponent 2014b). The maximum value is well below the 10,000 mG medical device standard. Given the low magnetic field levels expected, the Project would have little or no effect on public health and safety. Additional details on the effects of magnetic field safety are discussed in the CHPE FEIS, pages 5-89 to 5-90 and are incorporated herein by reference.

5.2.14 NOISE

5.2.14.1 Effects of Construction

The Overland Segment begins at the southern end of Lake Champlain in the town of Benson where the transmission line would exit the water. Construction of the terrestrial transmission line would cause a temporary increase in noise close to the construction activity. ***Table 5-8*** provides comparable noise levels within 100 feet of construction activities (Industrial Noise, Inc.[42]). Noise at these levels could interfere with speech or sleep in a location close to the operating construction equipment. Equipment deliveries or diversion of normal road traffic to accommodate temporary work sites along road ROWs could result in increased noise on adjacent roadways. Although the noise levels generated during

[42] http://www.industrialnoisecontrol.com/comparative-noise-examples.htm

construction would be greater than ambient conditions for most of the receptors in the immediate vicinity, work in any given location would last approximately two weeks, and no single receptor would be exposed to noise levels for an extended period. Noise generated at terrestrial HDD sites would have noise levels of 80-84 dBA at 50 feet (Michael Theriault Acoustics, Inc. 2013) and operations are expected to be shorter in duration than in water-to-shore operations. TDI-NE would notify residents ahead of time regarding construction activities in residential areas traversed by the transmission line.

Installing transmission cable in road and railroad ROWs requires a wide range of site preparation and construction activity, such as clearing vegetation, removing and storing topsoil, preparing a gravel access path, excavating a trench, delivering cable to the installation site, installing (by HDD) and splicing cable, backfilling, removing excess native fill, replacing native topsoil, and restoring the site (re-grading and revegetating). Noise from terrestrial construction activities would vary depending on the type of equipment being used, the area in which the action would occur, and the distance between the noise source and the receptor. Typical equipment used during cable trenching and installation activities could include excavators, trucks, bulldozers, and loaders.

Noise levels associated with construction of the proposed CHPE Project were modeled for certain cases where no reasonable noise data were available from previous studies. Noise levels were determined based upon the types of equipment that would be used and the duration of use. Methods are described in more detail in Section 5.2.17 of the CHPE EIS (DOE 2014). According to the modeling conducted for the CHPE, noise associated with this equipment would be typical of noise produced during normal heavy construction activities (***Table 5-8***). These sound levels were predicted at 100, 500, 1,000, and 2,000 feet as shown in ***Table 5-8.***

The effect of noise generated during construction along the Overland Segment of proposed NECPL Project would vary because some portions of the route are located in rural settings and others are closer to towns and highways, where ambient sound levels increase due to increased population density and highway traffic. The Overland Segment of the Project follows existing road and railroad ROWs. Noise-sensitive receptors in the Overland Segment include residences, schools, churches, and libraries and areas in which a quiet setting is preferred for recreational use. This soundscape includes natural sources, such as wind, vegetation (e.g., rustling), and wildlife; transportation sources (e.g., trains, automobiles, and trucks); and machinery (e.g., climate-control and ventilation equipment for buildings, and equipment required for local industrial operations).

At 100 feet from active construction, the noise level would be approximately 66 to 81 dBA decreasing with distance. At a distance of 600 feet, the peak noise level would be less than 72 dBA. Construction equipment would be equipped with sound-muffling devices and maintained in good operating condition at all times.

TABLE 5-8 NOISE LEVELS TYPICAL OF CONSTRUCTION ON LAND

Activity	Calculated Sound Levels (dBA) at Distance			
	100 feet	500 feet	1,000 feet	2,000 feet
Vegetation Clearing	66	53	46	40
Topsoil Removal and Storage	77	63	57	51
Access Path Preparation (gravel)	73	59	53	47
Excavate Trench	81	67	61	55
Cable Delivery	69	55	49	43
HDD	89	72	66	60
Site Deliver and Pull Cable	81	68	61	55
Splice Cable	78	64	58	52
Deliver and Install Thermal Backfill	76	62	56	50
Install Native Backfill	80	66	60	54
Remove Excess Native Fill from site	70	56	50	44
Replace Topsoil, York Rake Vegetation	80	66	60	54

Shallow bedrock may be encountered along some portions of the construction corridor. Typical removal techniques include excavating with a backhoe, hammering with a pointed backhoe attachment, and or blasting. Other equipment that could be used includes track rig drills, rock breakers, jackhammers, rotary percussion drills, core barrels, and rotary rock drills with rock bits. Other routine activities associated with removing rock, such as trucks traveling on uneven surfaces, would result in some minor amounts of ground-borne vibration. Vibration from these sources would attenuate rapidly and generally would not be perceptible outside of the construction corridor.

Blasting would be used where needed to remove hard rock with less effort and disturbance than rock-drilling, rock-breaking, or rock-hammering thus increasing impulse (instantaneous) noise. Impulse noise from blasts could range up to 140 dBA at the blast location or more than 90 dBA for receptors within 500 feet (BLM and CPUC2008, as cited in DOE 2014). Blasting and the effects of associated noise and vibration on nearby land uses and structures would be managed with a blasting plan for each site. Proper implementation of a blasting plan that accounts for all nearby buildings and structures the increase in noise and vibration would minimize effects on potential receptors.

At the transition from water to land and at road and railroad crossings, cables would be installed by HDD to minimize disturbance of the near-shore area and road and railroad infrastructure. The typical stationary equipment at the HDD operations staging area would include the drilling rig, support air compressor, electrical generator, backhoe, crane, and a mud makeup/recovery system. Each piece of equipment would have an engine. Noise generated from the water-to-land HDD operation would be relatively constant for approximately two weeks at a level up to 89 dBA within 100 feet of the HDD equipment, which is slightly louder than typical construction noise levels (DOE 2007). Residents most likely to experience the noise of HDD activity would be found in Benson, where the Lake Champlain Segment exits the water and in Alburgh, where the cable enters Lake Champlain. Although the increase in noise levels in the immediate vicinity of the HDD operations would be relatively stationary, the increased noise levels would be temporary. Terrestrial HDD operations would produce slightly lower noise levels (86 dBA) because smaller equipment would be used and operations would be shorter in duration. TDI-NE would notify residents ahead of time regarding construction activities in residential

areas traversed by the transmission line. Where warranted, TDI-NE would install temporary sound barriers, such as wooden walls, to reduce the level of noise from HDD that reaches sensitive receptors.

5.2.14.2 Effects of Operations, Maintenance, and Emergency Repairs

Operation of the proposed Project would produce no continuous sound along the Project route other than at the proposed new Ludlow HVDC Converter Station, which is likely to be the only long-term source of noise. Periodic inspection and maintenance, and possible emergency repairs would generate noise; however, the resulting increases in sound levels would be brief in duration. In general, the increase in sound levels related to inspection and maintenance activities would be associated with noise generated from vehicle traffic and maintenance equipment, such as lawn mowers and other equipment needed to maintain the ROW. Noise levels generated from emergency repair activities would be similar to those expected during construction (***Section 5.2.14.1***) but would involve less equipment, would be of much shorter duration, and would be limited to the immediate area of repairs.

The sound sources at the new HVDC converter station would be continuous during the night and the day. Some sound sources would be tonal. According to both the WHO Europe guidelines and ANSI S12.9[43], the appropriate noise threshold goal would be 40 dBA (annual average Leq); however, the more conservative ANSI S12.9 Part 4 tonal adjustment of the WHO Europe guideline would be applied for this Project. This would result in a noise threshold goal of 40 dBA Lnight for broadband and 35 dBA Lnight for tonal sound. Given that the noise goals are based on protection against sleep disturbance, they would apply only to areas of frequent human use around residences and would not apply to areas that have transient uses, such as driveways, trails, farm fields, and parking areas. NECPL Project noise goals are more stringent than the town of Ludlow's noise limits. Under the Ludlow zoning limits, the noise produce by a project may not exceed 65 dBA for more than 8 hours in 24 and may not exceed 70 dBA at residential property lines. These zoning limits are substantially less restrictive than the NECPL Project goal of 35 dBA Lnight.

5.2.15 HAZARDOUS MATERIALS AND WASTES

5.2.15.1 Effects of Construction

The terrestrial transmission cables do not contain any hazardous fluids, thereby eliminating any potential for soil contamination from the cables themselves. The installation of the terrestrial transmission line requires the transport, handling, use, and onsite storage of hazardous materials and petroleum products such as gasoline, diesel, oils, hydraulic fluids, and cleaners. Most of these products are used in the operation of the graders, trucks, and trenching equipment needed for the installation of the terrestrial transmission line. Small amounts of hazardous wastes, primarily used oils, solvents, and lubricants, may be generated as by-products of the terrestrial transmission cable installation process (TDI-NE 2014a).

To minimize the potential impacts from hazardous materials and wastes, contractors should be trained by TDI-NE in the appropriate hazardous materials and waste-handling protocols:

- establishing SPCC or its equivalent;
- using secondary containment where applicable; and
- following all appropriate federal and State of Vermont regulations regarding management of hazardous materials and wastes.

[43] ANSI S12.9 (American National Standard Quantities and Procedures for Description and Measurement of Environmental Sound): Noise Assessment and Prediction of Long-Term Community Response" is used to establish a noise standard based on long-term exposure to sound and is based on an annual average day/night sound level.

Drilling fluid used in the HDD process would be continuously reused in a closed-loop system, and the volume and the pressure of the fluid would be monitored for any release in accordance with an HDD Contingency Plan. Visual observations of drilling fluid or excessive loss of volume or pressure in the borehole would trigger halting drilling activities and initiating clean-up procedures for any released bentonite. Used drilling mud would be disposed of at an approved landfill (TDI-NE 2014a).

5.2.15.2 Effects of Operations, Maintenance, and Emergency Repairs

Minimal amounts of hazardous materials and petroleum products would be needed to operate mowing equipment, trucks, and other vehicles needed to conduct maintenance (e.g., control of vegetation in the permanent terrestrial ROW and preventive maintenance on cooling stations), and routine non-intrusive inspections of the terrestrial transmission cables and cooling stations in the Overland Segment. Such activities would be temporary but occur multiple times over the operating life of the transmission line. Should any sections of the terrestrial transmission cables need to be uncovered for emergency repairs, localized disturbances of soil potentially containing contaminants could occur. The terrestrial transmission cables are designed to be maintenance-free and require infrequent inspections; therefore, any hazardous materials and waste impacts from maintenance, inspection, and emergency repairs would be infrequent and not significant. The terrestrial transmission cables do not contain any hazardous fluids, thereby eliminating any potential for soil contamination from the cables themselves (TDI-NE 2014a).

5.2.16 AIR QUALITY

Lists of construction equipment, the anticipated construction schedule, associated emissions calculations using EPA's MOVES program, and references for the Overland Segment are provided in ***Appendix K***.

5.2.16.1 Effects of Construction

Construction-related air pollutant emissions would primarily result from diesel fuel-powered internal combustion engines, such as bulldozers, bucket loaders, cranes, rock trenchers and other heavy equipment, and from fugitive dust. Dust emissions would occur from unpaved roads, vegetation and site clearing, debris removal, bedrock blasting, and other earthmoving activities. The gaseous and particulate emissions would not be continuous and would be distributed over a relatively large area.

The amount of fugitive dust generated from construction activities would depend upon drainage properties, the soil type, and amount of recent precipitation. Generally, the coarser the soil material and the higher the moisture content, the lower the amount of surface dust that would enter the air. Soils in the Overland Segment range from fine organic loam and sand to coarser gravel or other unconsolidated material. The drainage along the terrestrial construction corridor ranges from poorly to excessively drained. This area can experience high rainfall, and, depending on the season in which construction would take place, the moisture content of the soil could be high resulting in limited dust emissions.

Trenching activities would emit fugitive dust. To minimize fugitive dust, topsoil would be stripped from the trench and subsoil stockpile area (trench plus spoil side method) and placed on one side of the trench. Subsoil would be placed on the opposite side of the trench. Both stockpile areas would be stabilized with water as appropriate to prevent dust emissions. The HDD borehole and terrestrial cable installation would not likely emit dust as the HDD borehole would be saturated with water.

Shallow bedrock may be encountered along some portions of the Overland Segment. Dependent on relative hardness, fracture susceptibility, and expected volume of the material, rock encountered during trenching would be removed using conventional excavation with a backhoe, hammering with a pointed backhoe followed by backhoe excavation, or blasting followed by backhoe excavation. Fugitive dust emissions associated with blasting would be localized and temporary. The transport and disposal of blasted rock off-site could also produce particulate emissions.

TDI-NE proposed measures for managing dust, such as wetting down the blast area prior to initiating the blast, delaying blasting activities during windy events, applying soil stabilizers, wetting dry soil, covering truckloads during transport activities, and seeding or replanting exposed areas as soon as practicable. Gaseous and particulate emissions would be limited by minimizing equipment idling and properly maintaining equipment. Estimated emissions from construction activities in the Overland Segment are presented in ***Table 5-9***.

TABLE 5-9. ESTIMATED AIR EMISSIONS RESULTING FROM CONSTRUCTION ACTIVITIES IN THE OVERLAND SEGMENT

Project Area	NO_x (tpy)	VOC (tpy)	CO (tpy)	SO_2 (tpy)	PM_{10} (tpy)	$PM_{2.5}$ (tpy)
Overland Segment	41.93	4.11	20.66	0.02	51.96	16.03

Key: tpy=tons per year

Greenhouse Gas Emissions

The proposed Project would emit GHGs, including CO_2, CH_4, and N_2O. Construction activities within the Overland Segment are estimated to emit approximately 4,519 tons of CO_2 equivalent (CO_2-eqv) GHG emissions over the entire construction period (***Table 5-10***). The estimated GHG emissions from construction of the proposed Project would be small (<0.1%) compared to the 8.27 million tons of CO_2-eqv emissions in Vermont in 2012 (VDEC 2015).

TABLE 5-10 ESTIMATED GREENHOUSE GAS EMISSIONS RESULTING FROM CONSTRUCTION ACTIVITIES IN THE OVERLAND SEGMENT

Proposed Project Segment	CO2 (tpy)	CH4 (tpy)	N2O (tpy)	CO2-eqv (tpy)
Overland Segment	4,509	0.14	0.02	4,519

5.2.16.2 Effects of Operations, Maintenance, and Emergency Repairs

Post-construction activities within the Overland Segment would consist of transmission cable inspections, preventive maintenance, vegetation management, and emergency repairs along the ROW. Regular inspections of the transmission cables, in accordance with the manufacturer's specifications, would be conducted to maintain equipment integrity. Vegetation management, such as tree cutting and mowing, would be performed on a regular basis along the ROW using gasoline- and diesel-powered equipment. Fugitive dust would potentially be emitted from earthmoving activities and from vehicles traveling along unpaved roads. In the event of emergency repairs, as addressed in the ERRP, qualified repair personnel would be dispatched to the repair locations. Once the portion of the transmission cable

was excavated, specialized jointing personnel would remove the damaged cable and install new cable. The use of motor vehicles, boats, and heavy equipment by crews accessing the transmission cables or the new HVDC converter station would result in emissions. The types of heavy equipment and vehicles used would be similar to those described for construction; however, their usage would be considerably less. Although maintenance and inspection activities would occur and emergency repairs could occur over the life of the proposed Project, there would not be long-term impacts on regional air quality due to the sporadic nature and the expected short duration (1 to 5 days) in any given location. The resulting increase in emissions would have no significant adverse effect on air quality or cause a violation of state or national ambient air quality standards.

The proposed NECPL Project would deliver renewable, low carbon energy which would lessen New England's reliance on natural gas, increase fuel diversity, reduce wholesale power costs and electric rates, and lower power plant emissions (Testimony of Seth G. Parker December 8, 2014). Over the first 10 years of the NECPL Project's operation (April 2019 to March 2029), power plant emissions of CO_2, SO_2, and NO_x in New England are predicted to be reduced by 32.9 million tons (8.6 percent), 13.6 thousand tons (5.8 percent), and 6.4 thousand tons (5.4 percent), respectively (Testimony of Seth G. Parker December 8, 2014).

Emissions of GHGs from the proposed Project would have no direct effect on the environment in the ROI or contribute appreciably to global warming. However, emissions from the proposed Project in combination with past and future emissions from all other sources would contribute incrementally to climate change impacts. At present, there is no methodology that would allow the DOE to estimate specific impacts (if any) of climate change that may be produced near the proposed Project or elsewhere. In addition, if the power provided by the proposed Project is generated primarily from renewable sources, any increase in GHG emissions from the construction and operation of the proposed Project is anticipated to be more than offset by a reduction in emissions associated with power generated from fossil fuels in Vermont.

The operation of the proposed Project could result in GHG emissions associated with electricity generation to power the proposed new Ludlow HVDC Converter Station. The proposed new HVDC converter station would be powered by electricity from the transmission cables. In the unlikely event this is not possible, a local utility or a diesel generator would be used, and such options would undergo all required permitting requirements and approvals prior to installation. The GHGs associated with the electricity generated by a local utility for the proposed new HVDC converter station would not be significant. There would be small amounts of GHGs emitted as a result of motor vehicle activities related to the facility. The estimated GHG emissions from operation of the proposed Project would be small compared to the state of Vermont and national GHG emissions.

5.2.17 SOCIOECONOMICS

Socioeconomic impacts on the Overland Segment of the Project area are discussed with the impacts on the Lake Champlain Segment, and are included in ***Section 5.1.17*** above.

5.2.18 ENVIRONMENTAL JUSTICE

5.2.18.1 Effects of Construction

Minority populations for the two counties located within the Overland Segment ROI are far less than those reported for the state of Vermont (***Appendix J***). The percent of the total number of families that earned below the poverty level for Rutland and Windsor counties mirror that for the state of Vermont; therefore, the potential effects of the proposed Project construction would be equal throughout the

population and would not be considered to effect minority and low-income populations disproportionately. The census track data used for this analysis is located in ***Appendix J.***

The effects of construction on populations within the ROI would be minor and temporary. The overland cable route would occur almost exclusively within existing public ROWs (other than TDI-NE's property). Noise generated by construction activities would be temporary and would cease upon the completion of Project installation. If blasting is required, pre-blast and post-blast surveys would be offered to residents in the vicinity of the blast area. Traffic delays and detours resulting from construction vehicles and work site locations would be of short duration and would be transitory. The transmission cable would generally be installed in cleared roadways or safety zones to provide a buffer from traffic. Traffic controls would be implemented according to town, state, and federal standards. Construction effects on all populations, including minority and low-income populations, are further described in ***Sections 5.1.13***-Public Health and Safety, ***5.1.16***-Air Quality, and ***5.1.17***-Socioeconomics.

5.2.18.2 Effects of Operations, Maintenance and Emergency Repairs

The effects of operation and maintenance of the transmission cable in the Overland Segment are expected to be minor, intermittent, and less frequent than those of construction. TDI-NE's proposed general mitigation measures would further reduce potential effects on the general population and minority and low-income populations. Electric and magnetic fields would be reduced by burying the cable and by using DC technology. A multidisciplinary team selected the new Ludlow HVDC Converter Station site from several possible locations to significantly reduce potential visual and noise effects. The proposed station is close to compatible land uses, including multiple overhead transmission lines and an existing VELCO substation.

6 CUMULATIVE AND OTHER IMPACTS

6.1 CUMULATIVE IMPACTS ANALYSIS

Cumulative impacts result from the "incremental impact of the action when added to other past, present, and reasonably foreseeable future actions regardless of what agency (federal or non-federal) or person undertakes such other actions"; they can result from "individually minor but collectively significant actions taking place over a period of time" (40 CFR 1508.7). The analysis in this section consists of two parts: identification of other actions, and a description of potential cumulative impacts. Some readily identifiable actions are included herein; any other projects identified during the public review period on this EIS will be addressed in the Final EIS.

6.1.1 OTHER ACTIONS CONSIDERED FOR POTENTIAL CUMULATIVE IMPACTS

The potential for cumulative impacts depends on both spatial and temporal factors within the environment, which can vary between resource areas. The geographic ROI for cumulative impacts includes the areas in which the proposed NECPL Project has direct and indirect impacts on resources, and corresponds to the ROIs described in ***Section 3***. The temporal boundaries include past actions, ongoing actions, and reasonably foreseeable future actions to cover the proposed Project construction period and beginning of operations (i.e., 2016 through 2022).

6.1.1.1 Past Actions

Past actions are those actions that occurred within the geographic ROI of cumulative impacts and that shaped the current environmental conditions of the project area. For the purposes of this EIS, actions that occurred in the past and their impacts are now part of the existing environment, and are included in the affected environment described in ***Section 3***.

6.1.1.2 Present and Reasonably Foreseeable Future Identified Actions in the Lake Champlain Segment

Champlain Hudson Power Express

The CHPE Project is a proposed 1,000-MW HVDC underwater and underground transmission line that would bring energy from the United States-Canada border to the New York City metropolitan area (DOE 2014). The DOE issued a Presidential permit for the construction, operation, and maintenance of the Project in October, 2014. The Project would install two 6-inch wide cables for an estimated 226 miles, all in New York. Approximately 101 miles of cable are proposed to be buried under Lake Champlain; the remaining overland and aquatic portions are located in the state of New York and in the Hudson and Harlem rivers. The transmission line would end at a converter station to be built at a location in Astoria, New York and connect into the ISO-New England transmission grid. Because the proposed CHPE Project would be installed only in New York, and the proposed NECPL Project would be installed at varying distances across the state border in Vermont, significant cumulative impacts on the environment would be unlikely. There could be some cumulative effects as a result of both projects being constructed at the same time (barge traffic, disposal of wastes and sediments; potential impact to recreational users on Lake Champlain) on both sides of Lake Champlain; however, this is unlikely to occur because the CHPE Project would be installed before the NECPL Project and by the time the NECPL Project were to begin construction, it is anticipated that the CHPE Project may still be under construction but would not be under construction in Lake Champlain. If the two projects were to occur during the same time, the ferry services may be temporarily interrupted by construction; therefore, tourists and ferry users could be temporarily affected and have to seek alternative transportation.

Disposal facilities would not be adversely affected because any wastes from either New York or Vermont portion of Lake Champlain would be disposed of in the state where they originated; potential saturation of the disposal sites would not occur from these two projects together or independently. TDI-NE anticipates that the transmission cables for both projects would be transported to Port Elizabeth, New Jersey, where they would be loaded onto the cable-laying vessel or onto a supply barge and then transported up the Hudson River and through the Champlain Canal. The construction on the Lake Champlain segment of the CHPE Project is likely to be complete before the supply barges provide materials for construction of the NECPL Project, thereby not increasing barge traffic substantially in Lake Champlain.

The Green Line Infrastructure Alliance also proposes to build a 60-mile underground and underwater electric transmission cable to deliver 400 MW of clean energy to New England. Known as the Vermont Green Line, this project would deliver renewable energy from new wind farms in the northern part of Clinton and Franklin counties, Vermont through an underwater cable on the bottom of Lake Champlain to southern New England. The preferred cable route would interconnect with the existing power grid at a new converter station in Beekmantown, New York, travel under Lake Champlain, and connect to another new converter station in New Haven, Vermont. All land cables would be underground with the project expandable to 800 MW if the need arises[44]. The Vermont Green Line's new converter station in New Haven is approximately 35 miles North of Benson, Vermont, where the proposed NECPL Project would exit Lake Champlain.

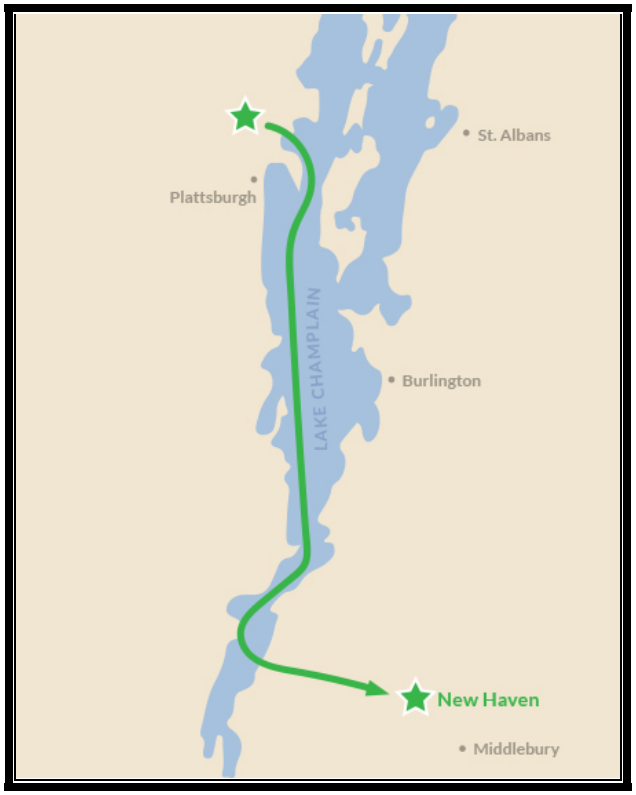

FIGURE 6-1. PROPOSED GREEN LINE INFRASTRUCTURE ALLIANCE PROJECT ROUTE

[44] http://greenlineinfrastructurealliance.com/newsroom/ accessed September 1, 2015

6.1.1.3 Present and Reasonably Foreseeable Future Identified Actions in the Overland Segment

The Vermont Statewide Transportation Improvement Program (STIP) provides information on planned transportation improvement projects for fiscal years (FYs) 2015 through 2018. These projects include road maintenance activities and bridge replacement and rehabilitation programs. Projects are prioritized on an annual basis based on priority and Regional Planning Commission input (VTrans 2015). Projects that occur over the same time and in the same place as the proposed NECPL Project are within the cumulative impacts ROI because they have the greatest potential for cumulative impacts. The STIP does not indicate any roadway construction or traffic and safety projects within the ROI for FYs 2015 through 2018 that would have the potential for cumulative impacts; however, several town highway bridge projects are currently planned that may occur in the same time and place as the proposed NECPL Project. These bridge projects include project numbers: BRF 3000(19) - Rutland City; BRF 3000(18)S - Rutland City; BRF 025-1(42) - Ludlow; BHO 1443(49) - Shrewsbury. These bridge projects would likely take place during FYs 2015 and 2016; however, project priority may change based on other planned projects and regional input (VTrans 2015). Cumulative impacts of bridge construction projects occurring within the same time and place as the proposed NECPL Project could include increased but local and temporary disturbances of traffic patterns and intensified but local and temporary increases in truck traffic.

6.1.1.4 Present and Reasonably Foreseeable Future Energy Projects

Vermont's 2011 Comprehensive Energy Plan (CEP) was developed to achieve the goal of having 90 percent of Vermont's total energy coming from renewable sources by 2050. Vermont currently relies on approximately one fourth of its energy from renewable sources, according the 2011 CEP, but energy use in the transportation and heating sectors has made little progress toward the renewable goals (Vermont Department of Public Service 2011). This renewable goal would likely drive Vermont's energy projects in the future and over the life of the proposed NECPL Project, which is 40 years. Vermont's goal to have less reliance on fossil fuels would have a positive effect on air quality and greenhouse gas emissions than projects that provide energy from fossil fuels.

Existing and proposed energy projects within the same counties as the proposed Project are within the cumulative impacts ROI because those projects have the greatest potential for cumulative impacts. Projects outside the counties traversed by the proposed NECPL Project route would have much less potential for cumulative environmental impacts and so they are not discussed in this analysis.

On June 11, 2015, the state of Vermont passed Act No. 56 (H.40) which created a Renewable Energy Standard (RES) applicable to the supply portfolios of Vermont electric utilities with requirements that start in 2017. The RES repeals the Sustainably Priced Energy Enterprise Development (SPEED) Program, except for the standard offer component of that program. "The RES establishes three categories:

- It converts existing total renewables targets into a total renewable energy requirement that rises from 55 percent of a utility's sales in 2017 to 75 percent in 2032. A utility may meet this requirement by owning renewable energy or renewable energy credits (RECs) from any plant, as long as the plant's energy is capable of delivery to New England.
- It creates a distributed renewable generation category that rises from one percent of a utility's sales in 2017 to 10 percent in 2032. A utility may meet this category through renewable energy or RECs from plants that come into service after June 30, 2015 and are 5 MW or less and directly connected to the Vermont utility grid or are net metering systems for which the utility retires the RECs. This category counts toward the total renewable energy category.
- It creates a separate energy transformation category that rises from 2 percent in 2017 to 12 percent in 2032, except that small municipal utilities will not have to meet this category until

2019. A utility may meet this category through additional distributed renewable generation or 'energy transformation projects.' Energy transformation projects must have commenced on or after January 1, 2015 and deliver energy goods or services other than electric generation and must result in a net reduction in fossil fuel consumption by a utility's customers and the attributable GHGs. The act states that energy transformation projects may include home weatherization or other thermal energy efficiency measures, air source or geothermal heat pumps, and other measures."

HR 40 also includes provisions relating to the ownership and retirement of RECs for net metering systems and to the adoption of setbacks and screening requirements for solar electric generation plants.[45]

Existing and proposed generation projects within the cumulative impacts ROI are listed in ***Table 6-1***. The proposed NECPL Project is a transmission project; therefore, generation sources would not interconnect with the Project transmission cables. The NECPL Project and other clean energy generation sources would not cause any cumulative effects to air quality, water quality, recreation and land use because these two clean energy projects are not within the NECPL Project ROI.

Vermont Gas proposed the Addison Rutland Natural Gas Project that would bring natural gas from Chittenden County to Addison County, Vermont. Current plans include developing the pipeline to Addison County, and may potentially continue farther into Vermont and/or New York in the future (Vermont Gas 2015)[46]. Construction and operation of this pipeline is not expected to cumulatively affect resources within the proposed Project ROI; should the natural gas pipeline ROI be collocated or adjacent to the Project ROI, some limited adverse cumulative effects could occur to terrestrial and aquatic habitats and wetlands.

TABLE 6-1 PRESENT AND REASONABLY FORESEEABLE POWER GENERATION PROJECTS IDENTIFIED IN 2015

Project Name	Summer Capacity (MW)	Winter Capacity (MW)	County	Operational Date	Interconnection Point
Georgia Mountain Community Wind	10	10	Chittenden	12/31/2012	CVPS 34.5 kV Fairfax - Milton Line
Fair Haven Biomass	33	33.3	Rutland	3/30/2016	CVPS 46 kV Castleton - Fair Haven

Key: MW-megawatt

Source: ISO-NE 2015

[45] http://legislature.vermont.gov/assets/Documents/2016/Docs/ACTS/ACT056/ACT056%20Act%20Summary.pdf
[46] http://www.addisonrutlandnaturalgas.com/ (accessed April 1, 2015)

Table 6-1 shows the ISO New England interconnection queue for electric transmission projects in the region. If the NECPL Project were constructed, the energy projects identified in ***Table 6-2*** could be implemented within the same timeframe, and could have potential cumulative impacts. Although not located within the counties traversed by the proposed NECPL Project, the CHPE Project is proposed to be located in part within Lake Champlain, on the New York side. These projects are included in ***Table 6-2*** for reference.

TABLE 6-2. PRESENT AND REASONABLY FORESEEABLE TRANSMISSION PROJECTS

Project Name	Capacity (MWs)	Type	County (Proposed NECPL Segment)	Interconnection Point	Proposed In-Service Date
Intertie[1]	1000	DC	Rutland and Addison	HQ 735 kV substation to existing VELCO 345 kV Coolidge substation	12/31/2018
Intertie[1]	425	DC	Addison	VELCO 345 kV New Haven substation	6/30/2018
Intertie[1]	1000	DC	Windsor	HQ to VELCO 345 kV Coolidge substation	12/31/2017
Champlain Hudson Power Express	1000	DC	None (Lake Champlain)	Astoria Annex 345-kV substation	2017
Vermont Green Line	400	DC	Clinton and Franklin	Beekmantown, New York	2020

Key: MW-megawatt
[1] Note: These project have not been issued names

Source: ISO-NE 2015

6.1.2 CUMULATIVE IMPACTS

The following sections describe cumulative impacts to resource areas from the proposed NECPL Project and other present or reasonably foreseeable actions. No cumulative effects are anticipated for Land Use, Transportation and Traffic, Cultural Resources, Hazardous Materials and Wastes, or Environmental Justice.

6.1.3 WATER RESOURCES AND QUALITY

Construction of the NECPL Project is anticipated to occur between 2016 and 2018, while construction of the CHPE Project is anticipated to occur between 2016 and 2017, the Vermont Green Line Project anticipates construction beginning in 2017 with an estimated 2019/2020 in-service date. As such, construction activities of the three projects may temporarily overlap in time in Lake Champlain,

although it is very unlikely that construction activities for the three projects would be in close proximity to one another at the same time. However, in the unlikely event that construction activities of the proposed NECPL Project, CHPE Project, and Vermont Green Line Project are close in both time and proximity, these projects would be expected to have incremental, additive impacts greater than just one project. Cumulative impacts may include disturbing aquatic substrates, temporarily increasing turbidity, resuspending contaminants and phosphorus into the water column, increasing noise and vibration, creating light sources during nighttime construction, and increasing the potential for spills. Sediment concentrations from the combined activities would drop rapidly with distance from the disturbances and begin to diminish immediately after activities have ceased.

6.1.4 AQUATIC HABITATS AND SPECIES

Installation of the proposed NECPL Project transmission line would temporarily affect benthic communities and fish by disturbing aquatic substrates, temporarily increasing turbidity, resuspending contaminants that are present into the water column, temporarily increasing noise and vibration levels, and increasing the potential for spills. Impacts on shellfish and benthic communities and fish associated with operation of the proposed NECPL Project could occur for the duration of the Project from magnetic fields and increased temperature around the transmission line.

Construction associated with the CHPE Project in Lake Champlain and the Vermont Green Line Project could overlap with the proposed NECPL Project in Lake Champlain in time but not likely geographic proximity because the CHPE Project would be constructed on the New York side of Lake Champlain and NECPL Project would be constructed on the Vermont side of Lake Champlain. The Vermont Green Line Project appears to have a similar route as the CHPE with some potential proximity to the NECPL Project. In the unlikely scenario that construction activities of the proposed NECPL Project, CHPE Project, and Vermont Green Line Project are close in time and proximity, then the construction-related impacts on aquatic habitats and species, such as disturbed substrates, increased turbidity, increased noise and vibration, and the potential for spills, of the projects could be greater than for just one project.

Numerous existing submerged and buried cables cross over or under the proposed NECPL Project construction corridor at various points. Where the proposed CHPE and NECPL projects cannot be buried to full depth, they would be covered with concrete mats or other protective structures that would convert the soft lake bottom to a hard substrate. For the CHPE Project, concrete mats would cover approximately 0.6 miles and 0.6 acres of the 101-mile portion of the route in Lake Champlain. A smaller percentage of the underwater routes for the NECPL Project would require concrete mats because there are significantly fewer utilities located along the NECPL Project route. The percent of underwater route for the Vermont Green Line Project that would require concrete mats is unknown at this time. When the concrete mats are placed in areas of fine sediment, the spaces between the individual concrete elements would be filled by suspended sediment and the surficial habitat would be partially restored. Given the limited area that would be impacted, and studies showing that disturbed benthic communities would recover over time as described in Section 6.1.2.4 of the CHPE FEIS, no significant cumulative impacts would be expected from the installation of concrete mats for the proposed NECPL Project and the other proposed underwater electric transmission line project.

The proposed NECPL Project would be an additional anthropogenic source of magnetic fields in Lake Champlain. The CHPE Project would be parallel to the NECPL Project in Lake Champlain in New York and the Vermont Green Line Project also appears to traverse the western portion (New York) of Lake Champlain. If implemented, these transmission lines would be additional sources of magnetic field and heat emissions. It is anticipated that, generally, the transmission lines would be far enough away that the combined magnetic fields would not be cumulatively stronger; therefore, would not

cumulatively impact aquatic species. However, individuals of a migrant species might encounter multiple submerged cables emitting magnetic fields along an entire migratory route. The cumulative impacts of repeated exposures on an individual could be important if enough individuals of that species were affected at a population level, although no evidence exists to suggest such an effect.

6.1.5 AQUATIC PROTECTED AND SENSITIVE SPECIES

Cumulative impacts on aquatic protected and sensitive species would include those as described for Aquatic Habitats and Species in ***Sections 5.1.4.1*** and ***5.2.4.1.*** The designation of threatened or endangered at the state level implies that past activities have significantly impacted these species. Generally, potential threats to lake sturgeon include degradation of riverine habitat, and loss of access to spawning habitat due to dam construction.

6.1.6 TERRESTRIAL HABITATS AND SPECIES

The proposed NECPL Project would involve burial of transmission lines; therefore, electric fields would not be emitted at or above the ground surface. While there is limited available information on the cumulative impacts of magnetic fields on terrestrial species over a lifetime, there is no evidence indicating that there are long-term life history effects. While no direct permanent impacts (i.e., permanent wetland fills) are proposed for the Project, wetlands in the Project ROI have the potential to be cumulatively affected because there would be secondary impacts (forest conversion) associated with clearing of PFO wetlands that overlap the permanent Project corridor. Clearing in PFO wetlands would result in irreversible conversion of these wetlands to PEM or PSS wetlands (TRC 2015). The wetlands impacted by the proposed NECPL Project occur adjacent to public roads or railroad ROWs where temporary workspace and clearing requirements in wetlands would be minimized, and potential effects to wetland functions are limited. As soils are temporarily disturbed and vegetation cleared, the Project may result in limited, temporary diminishment of existing wetland functions which may include water storage for flood water and storm runoff, surface and ground water protection, wildlife habitat, rare, threatened and endangered species habitat, and/or erosion control through binding and stabilizing the soil. These temporary effects are not expected to be adverse given the site context (i.e., Project has relatively limited effects in each wetland/buffer zone and is adjacent to existing roads and railroads where wetland functions are already diminished) (TRC 2015). Proposed highway improvements that would also use the existing ROW corridor may produce similar effects on wetlands; however, because the area is already disturbed and mostly void of wetlands, long-term adverse effects are expected to be minimal, especially with implementation of BMPs and other mitigation measures prescribed by various state and federal permits.

6.1.7 TERRESTRIAL PROTECTED AND SENSITIVE SPECIES

Cumulative impacts on aquatic protected and sensitive species would include those as described for Terrestrial Habitats and Species in ***Section 3.1.6***. The designation of threatened or endangered at the federal or state level implies that past activities have had major adverse impacts on these species. Cumulatively, present and future activities are likely to continue to affect threatened and endangered species adversely if protection measures are not followed.

6.1.8 GEOLOGY AND SOILS

Impacts on sediments in the Lake Champlain Segment from the proposed NECPL Project would be expected from cable installation and dredging. Generally, impacts would include disturbed and suspended sediments. The construction timeframe for the CHPE Project and Vermont Green Line Project may overlap with construction of the NECPL Project, and these cables would be located parallel

to the proposed NECPL Project in the New York portion of Lake Champlain. In the unlikely scenario that construction activities of the proposed NECPL Project, CHPE Project, and Vermont Green Line Project are close in both time and proximity, installation of these projects would be expected to have incremental, additive impacts greater than just one project by disturbing aquatic substrates, thereby resuspending contaminants. Sediment concentrations from the combined activities would fall rapidly with distance from the disturbances and diminish after activities have ceased.

Impacts on sediments in the Overland Segment are limited to past actions in the existing ROWs where sediments have been previously disturbed. New areas adjacent to ROWs where sediments would be disturbed may permanently compact these soils and reduce vegetative cover. Potential road projects along with the proposed NECPL Project could cumulatively widen the ROW with the establishment of additional laydown areas but TDI-NE proposes to keep these areas to a minimum and provide revegetation to any material laydown and staging areas outside the ROW.

6.1.9 CULTURAL RESOURCES

No specific cumulative effects have been identified; however, a PA has been developed in consultation with the VTSHPO to avoid and minimize impacts on cultural resources. .

6.1.10 INFRASTRUCTURE

United States and Vermont energy policies increasingly promote energy conservation and provide reliable, clean, and renewable sources of energy. Federal and state environmental regulations could result in older, more emissive power plants closing because the cost to upgrade or retrofit is too great. The proposed NECPL Project would supply 1,000-MW at full capacity. The proposed NECPL Project would be only one of several projects that could be implemented in the next few years to provide electricity. The proposed NECPL Project would be expected to contribute to cumulative increases in electrical capacity, efficiency, and reliability.

The analyses in ***Section 5.1.11*** identify generally negligible impacts on existing communications, natural gas, liquid fuel, sanitary sewer and wastewater, and solid waste management. TDI-NE has developed specific design and construction measures to further reduce impacts. To date, no other projects have been identified that would result in cumulative impacts on existing infrastructure.

6.1.11 RECREATION

The proposed NECPL Project could have temporary impacts on boaters and water recreation during installation of the aquatic transmission line and occasional maintenance or emergency repairs. In the unlikely scenario that construction activities of the proposed NECPL Project, CHPE Project, and the Vermont Green Line Project are close in time and proximity, multiple aquatic construction activities would cumulatively increase vessel activity and closures in the immediate vicinities around construction activities. Limited closures in the immediate areas surrounding the active transmission line installation could affect recreational watercraft users in Lake Champlain; however, watercraft would be able to maneuver around closed areas. These kinds of closures would be temporary.

The proposed NECPL Project Overland Segment construction along with potential road improvements identified in ***Section 6.1.1.3*** could produce temporary road closures for cyclists in the construction ROWs; however, this effect would be localized and temporary and recreational users could use alternate areas to recreate until the construction is completed.

6.1.12 PUBLIC HEALTH AND SAFETY

The proposed NECPL Project would be a source of magnetic fields; however, there is no evidence to support a conclusion that there were would be any adverse health impacts associated with the expected levels of magnetic fields associated with the proposed NECPL Project because the cables would be buried in Lake Champlain and the Overland Segment. The Vermont Green Line's overland segment would not cross the Overland Segment of the NECPL Project.

6.1.13 AIR QUALITY

The proposed NECPL Project's construction activities are anticipated to move along the route quickly and would result in low air emissions for the duration of construction. Therefore, the proposed NECPL Project would be expected to contribute negligibly to cumulative impacts on air quality during construction activities when combined with other construction activities in the same areas.

The proposed NECPL Project is intended to reduce criteria pollutant and GHG emissions by alleviating the need to operate older, more emissive power plants. As older, more emissive sources of power generation are retired, the proposed NECPL Project would be expected to have long-term, beneficial, cumulative impacts on air quality.

Emissions from the proposed Project in combination with past and future emissions from all other sources would contribute incrementally to climate change impacts. At present, there is no methodology that would allow the DOE to estimate specific impacts (if any) of climate change that may be produced near the proposed Project or elsewhere. In addition, if the power provided by the proposed Project is generated primarily from renewable sources, any increase in GHG emissions from the construction and operation of the proposed Project is anticipated to be more than offset by a reduction in emissions compared to power generated from fossil fuels in Vermont.

6.1.14 NOISE

Construction activities could produce elevated noise levels as construction and installation activities move along the proposed NECPL Project route. In the unlikely scenario that construction activities of the proposed NECPL Project, CHPE Project, and Vermont Green Line Project are close in time and proximity, the activities would cumulatively generate more noise than one project and could have temporary cumulative impacts on the noise environment. These impacts would last only for a short period of time, should this occur.

6.1.15 SOCIOECONOMICS

The proposed NECPL Project would result in beneficial socioeconomic effects including potential energy savings, tax revenue, and creation of jobs. As previously described, other generation and transmission projects are planned or underway that would provide new sources of electricity and socioeconomic benefits for the area. The combined potential for energy savings from the projects that are planned or underway would be expected to provide long-term, cumulative socioeconomic benefits in the area. Further, creation of jobs identified in ***Section 5.1.17*** and ***Section 5.2.17*** from the NECPL Project and the proposed CHPE would cumulatively benefit socioeconomics by increasing jobs in New England.

6.2 UNAVOIDABLE ADVERSE ENVIRONMENTAL EFFECTS

Unavoidable adverse impacts would result from implementation of the proposed NECPL Project. Unavoidable adverse impacts during construction activities include increases in water turbidity; disturbance and resuspension of sediments; noise from construction; vegetation clearing; localized habitat degradation; soil disturbance and erosion; stormwater runoff into surface water; traffic; and air emissions. Maintenance activities and emergency repairs along the proposed NECPL Project route, once the transmission line is operational, could generate unavoidable adverse impacts similar to those occurring during construction, although these would be confined to the immediate area of disturbance. Adverse impacts would be minimized with implementation of TDI-NE-proposed mitigation measures and BMPs as part of the proposed NECPL Project. Magnetic fields from transmission cables are also unavoidable, though there are no definitive conclusions as to whether these are adverse impacts on human health and safety and on aquatic and terrestrial wildlife.

6.3 RELATIONSHIP BETWEEN SHORT-TERM USES OF THE ENVIRONMENT AND THE MAINTENANCE AND ENHANCEMENT OF LONG-TERM PRODUCTIVITY

Short-term uses of the biophysical components of the human environment include impacts, usually related to construction activities, which occur over a period of less than 5 years. Long-term uses of the human environment include those impacts that occur over a period of more than 5 years, including permanent resource loss.

Section 5 identifies potential short-term, adverse impacts on the natural environment as a result of construction activities. These adverse impacts include increases in water turbidity; disturbance and resuspension of sediments; vegetation clearing; localized wildlife habitat degradation; soil disturbance and erosion; stormwater runoff into surface water; and increased traffic, air emissions, and noise. This type of short-term impacts would persist only during construction activities in localized sections, occasional maintenance activities (e.g., vegetation management) in terrestrial sections, or emergency repair activities. Generally, disturbed areas would recover once ground-disturbing activities, noise, and construction vehicles leave the area. Adverse impacts would be minimized as a result of TDI-NE-proposed measures

Long-term impacts of the proposed NECPL Project include impacts on local geology that could alter drainage patterns due to localized blasting of bedrock, potentially altering lacustrine and riverine substrate and habitat with concrete mats, vegetation management in portions of the cable route, conversion of forested wetland to scrub-shrub wetland, increases in sediment and water temperature, and magnetic fields from the transmission cables.

The proposed NECPL Project would be expected to have long-term productivity by importing energy into the region without increasing transmission congestion, and improving system reliability.

6.4 IRREVERSIBLE AND IRRETRIEVABLE COMMITMENTS OF RESOURCES

Irreversible and irretrievable commitments of resources refer to impacts on or loss of resources that cannot be reversed or recovered, even after an activity has ended. Irreversible commitment applies primarily to non-renewable resources (i.e., minerals or cultural resources), and to those resources that are renewable only over long time spans (i.e., soil productivity). Irretrievable commitment applies to the loss of production, harvest, or natural resources. This section discusses irreversible and irretrievable commitments of resources as result of implementing the proposed NECPL Project.

Implementation of the proposed NECPL Project would result in the irreversible and irretrievable commitments of resources; these impacts are permanent.

Protected Species

Activities involving heavy machinery, which could include construction, maintenance, or emergency repairs, in terrestrial portions of the proposed NECPL Project route could result in the direct mortality of species individuals. Most mobile species would be expected to avoid areas undergoing ground-disturbing activities. Along aquatic portions of the proposed NECPL Project, the mortality of benthic organisms during construction would be negligible; therefore, little to no indirect impacts on protected species, such as lake sturgeon, are expected.

In some limited areas, the TDI-NE has proposed that the transmission cables be covered with artificial substrates (e.g., articulated concrete mats), which could impact the habitat used by prey species for lake sturgeon by placing hard substrate on top of soft substrate. However, in many areas concrete mats would be used over bedrock or hard substrate where the cable cannot be buried; thus, the change in habitat in these areas would be negligible (i.e., hard substrate placed on hard substrate). These affected habitat areas would be very small areas as compared to the area of overall habitat, but this would be considered a permanent conversion of soft substrate to hard substrate. Lake sturgeon would be able to use adjacent areas for foraging.

Wetlands Habitat

During installation of the proposed transmission cable some areas of forested wetland would be permanently converted to scrub-shrub or emergent wetland, which is generally of lower value than forested wetland, and then maintained as emergent or scrub-shrub during operation of the transmission cable. This would be considered an irreversible and irretrievable impact.

Materials

Material resources irretrievably used for the proposed NECPL Project would include copper, lead, steel, concrete, bitumen, and other materials. These materials are not in such short supply that implementation of the Project would limit other unrelated construction activities. The irretrievable use of material resources would not be considered significant.

Energy

Energy resources used for the proposed NECPL Project would be irretrievably lost. During construction, gasoline and diesel fuel would be used for the operation of boats, train engines, vehicles, and equipment. Long-term operation of the new HVDC converter station would consume electricity. Intermittent inspection and emergency repair activities would require gasoline and diesel fuel. Overall, consumption of energy resources would not place a significant demand on their availability in the region. Therefore, limited impacts would be expected from the consumption of energy.

Landfill Space

The disposal of excavated soils in a landfill would be an irretrievable, adverse impact. There are numerous rubble landfills and construction and demolition processing facilities that could manage the waste generated. However, any waste generated by the proposed NECPL Project that is disposed of in a landfill would be considered an irretrievable loss of that landfill space.

Human Resources

The use of human resources for construction is considered an irretrievable loss only in that it would preclude such personnel from engaging in other work activities. However, the use of human resources represents employment opportunities and is considered beneficial.

6.5 CONFLICTS AMONG THE PROPOSED NECPL PROJECT AND THE OBJECTIVES OF FEDERAL, REGIONAL, STATE, AND LOCAL LAND USE PLANS, POLICIES, AND CONTROLS

The proposed NECPL Project would be consistent with land use plans, policies, and controls.

6.6 ENERGY REQUIREMENTS AND CONSERVATION POTENTIAL

Construction and operation of the proposed NECPL Project would result in an increase in energy demand over current conditions. Although the required energy demands would be met by the existing utility infrastructure along the proposed transmission line route during the construction and operations periods, energy requirements for facility operations would be subject to established energy conservation practices.

6.7 NATURAL OR DEPLETABLE RESOURCE REQUIREMENTS AND CONSERVATION POTENTIAL

Resources that would be permanently and continually consumed by implementation of the proposed NECPL Project include water, electricity, and fossil fuels. To the extent practicable, pollution prevention considerations would be included. In addition, sustainable management practices would be in place to protect and conserve natural and cultural resources.

6.8 EFFECTS ON URBAN QUALITY, HISTORICAL AND CULTURAL RESOURCES, AND THE DESIGN OF THE BUILT ENVIRONMENT, INCLUDING REUSE AND CONSERVATION POTENTIAL

Urban quality, historical and cultural resources, and the design of the built environment pertains to human-made spaces that provide the settings for human activities. “Built resources” is a broad term that could include buildings, parks, and even supporting infrastructure systems. Impacts on built resources could include a direct loss of a valued human-made resource, or a change in the setting that diminishes the character or functionality of a human-made resource.

Construction activities along the proposed NECPL Project route have the potential to affect historical and cultural resources adversely. The proposed NECPL Project route has been sited to minimize impacts on known historical and cultural resources, and consultation with the VTSHPO is ongoing. To avoid and minimize impacts on cultural resources a PA would be developed.

The aquatic portion of the proposed NECPL Project route has been sited to eliminate adverse impacts on federal navigation channels and anchorage areas, which could be considered a part of the built environment. The aquatic transmission cables are designed to be maintenance-free. Once installation is complete, the proposed NECPL Project would not be expected to impact the built environment within Lake Champlain, except in the event of emergency repairs.

The proposed overland NECPL Project route would be installed in the road and railroad ROWs. As such, the construction-related impacts would be short-lived, and, once construction is complete, would not be visible or noticeable. Therefore, the proposed NECPL Project would not affect the design of the built environment.

7 LIST OF PREPARERS

This section lists the individuals who filled primary roles in the preparation of this EIS. Brian Mills of the DOE Office of Electricity Delivery and Energy Reliability directed the preparation of the EIS. The EIS Preparation Team, led by Kelly Schaeffer of the EIS contractor Kleinschmidt Associates (Kleinschmidt), provided primary support and assistance to the DOE.

The DOE provided direction to Kleinschmidt, which was responsible for developing analytical methodology and assessing the potential impacts of the alternatives, coordinating the work tasks, performing the impact analyses, and producing the document. The DOE was responsible for the scope, content, and organization of the EIS, data quality, and issue resolution and direction.

The DOE independently evaluated all supporting information and documentation prepared by Kleinschmidt. Further, the DOE retained the responsibility for determining the appropriateness and adequacy of incorporating any data, analyses, and results of other work performed by Kleinschmidt in the EIS. Kleinschmidt was responsible for integrating such work into the EIS.

As required by *Federal Regulations* (40 CFR 1506.5[c]) Kleinschmidt signed a NEPA Disclosure Statement in relation to the work they performed on this EIS. This statement is provided in ***Appendix L***.

Input from a number of other DOE offices that reviewed internal versions of the EIS was incorporated while the EIS was under development.

U.S. Department of Energy	
Name	**Organization**
Brian Mills	The DOE Office of Electricity Delivery and Energy Reliability, Washington, DC
Julie Smith, Ph.D.	The DOE Office of Electricity Delivery and Energy Reliability, Washington, DC
Cooperating Agencies	
Timothy Timmerman/ William Walsh-Rogalski	U.S. Environmental Protection Agency Region 1
Michael S. Adams	U.S. Army Corps of Engineers, New England District
Michele E. Des Autels	U.S. Coast Guard
Other Federal Agencies	
U.S. Fish and Wildlife Service	
State Agencies and Stakeholders	
Vermont Agency of Natural Resources	
Vermont Department of Fish and Wildlife	
Vermont Department of Environmental Conservation	
Vermont Historic Preservation Officer	
Champlain VT, LLC, doing business as TDI-New England	
Conservation Law Foundation	

EIS Preparation Team		
Name	**Education/Experience**	**Responsibility**
Kelly Schaeffer	**Education:** MS, Recreation and Resource Management, Pennsylvania State University (1991); BS, Recreation Resources Management, University of Maryland (1986) **Experience:** 24 years professional experience	Project Manager
Laura Cowan	**Education**: M.S. Earth and Environmental Sciences, Lehigh University (2004), B.S. Science, The Pennsylvania State University (2002) **Experience:** 10 years professional experience	Deputy Project Manager Geology and Soils
Alan Haberstock	**Education:** M.S. Forest Ecology, Yale University School of Forestry and Environmental Studies (1990), B.A. Environmental Science, St. Lawrence University (1985) **Experience**: 24 years professional experience	Senior Technical Advisor Wetlands/Terrestrial
Brandon Kulik	**Education:** M.A. Zoology, DePauw University (1978); B.A. Environmental Studies, Colby College (1976) Experience: 36 years professional experience	Senior Technical Advisor Aquatics
Jennifer Morrissey	**Education:** M.S. Natural Resource Planning, University of Vermont (1998); A.B. American History, Harvard University (1993) **Experience:** 17 years professional experience	Land Use Recreation Socioeconomics
Sarah Woehler	**Education:** M.A. English, University of Maine (2010); B.A. English, University of Maine (2005) **Experience:** 6 years professional experience	Transportation and Traffic
Rachel Russo	**Education:** Ph.D. Earth and Environmental Science, University of New Hampshire (2009); M.S. Earth Science, University of New Hampshire (2005); BS Physics, Rensselaer Polytechnic Institute (2001) **Experience:** 6 years professional experience	Air Quality Sections Water Resources and Quality Sections
Tracy Maynard	**Education:** B.S. Environmental Science, Marine Science Concentration, University of Connecticut (1999) **Experience:** 15 years professional experience	Aquatic Habitats and Species Aquatic Protected and Sensitive Species
Steve Knapp	**Education:** B.S. Wildlife Ecology **Experience:** 12 years; Professional Wetland Scientist	Wetlands Terrestrial RTE Botanical
Bruce Harvey	**Education**: Ph.D., (1998) Vanderbilt University, Nashville, TN (U.S. History), M.A. (1988) University of South Carolina-Columbia, Columbia, SC (Applied History) **Experience**: 30 years professional experience	Cultural Resources

Alison Jakupca	**Education:** B.S. Wildlife, Aquaculture and Fisheries, Clemson University (2004) **Experience:** 10 years professional experience	Infrastructure Environmental Justice/Socioeconomic Web-site Development
Kevin Niebolo	**Education**: PhD Candidate University of Connecticut (ongoing), MA Geography, University of Connecticut (2012), BA Marine Science University of Connecticut (2004) **Experience**: 11 years professional experience	Public Health and Safety
Kerry Strout	**Education**: MS Resource Management and Administration, Antioch University New England **Experience**: 9 years professional experience	Hazardous Materials and Wastes Administrative Record
Carol DeLisle	**Education:** BA, Biological Science, University of Maryland Baltimore County (1988) **Experience:** 21 years professional experience	Technical Editor
Sue Byrd	**Experience:** 31 years professional experience	Editing Formatting, Document Compilation
Scott Ault	**Education:** B.S. Biology, Millersville University (1981) **Experience:** 32 years professional experience	Principal in Charge

This Page Intentionally Left Blank

8 REFERENCES

Alanko, T., M. Tiikkaja, H. Lindholm, and M. Hietanen. 2011. EMF Interference Detection Utilizing the Recording Feature of Cardiac Pacemakers. General Assembly and Scientific Symposium, 2011 XXXth URSI, (pp. 1-4).

Aldrich, T. E., and C. E. Easterly. 1987. Electromagnetic Fields and Public Health. Environmental Health Perspectives. 75, 159-171.

Arrowwood Environmental (AE). 2014. Indiana Bat Habitat Assessment Report. October 23, 2014.

Arrowwood Environmental. 2014b. RTE, Natural Community & Critical Wildlife Habitat Inventory Report, New England Clean Power Link Project. Prepared by Arrowwood Environmental, Huntington, VT. October 23, 2014.

Arrowwood Environmental (AE 2014C). Non-Native Invasive Species Inventory Report. October 2014.

Barrett, D. 2006. "Noturus flavus" (On-line), Animal Diversity Web. Available online: http://animaldiversity.ummz.umich.edu/accounts/Noturus_flavus/. Accessed December 5, 2014.

Bevelhimer, M.S., G.F. Cada, A.M. Fortner, P.E. Schweizer, and K. Riemer. 2013. Behavioral responses of representative freshwater species to electromagnetic fields. Trans. Am. Fish. Soc. 142(3):802-813.

Bruch, R.M. and F.P. Binkowski. 2002. Spawning Behavior of Lake Sturgeon (*Acipenser fulvescens*). Journal of Applied Ichthyology 18:570-579.

Bureau of Land Management (BLM) and State of California Public Utilities Commission (CPUC). 2008. *San Diego Gas & Electric Company Sunrise Powerlink Project Final Environmental Impact Report/Environmental Impact Statement*. October 2008.

Cada, G.F., M.S. Bevelhimer, K.P. Riemer, and J.W. Turner. 2011. Effects on Freshwater Organisms of Magnetic Fields associated with Hydrokinetic Turbines. ORNL/TM-2011/244. Oak Ridge National Laboratory, Tennessee.

Cada, G.F., M.S. Bevelhimer, A.M. Fortner, and P.E. Schweizer. 2012. Laboratory Studies of the Effects of Static and Variable Magnetic Fields on Freshwater Fish. ORNL/TM-2012/119. Oak Ridge National Laboratory, Tennessee.

Champlain Hudson Power Express Inc. (CHPEI). 2012. Champlain Hudson Power Express Project Joint Proposal Exhibit 39: Revised Electric and Magnetic Fields Report. July 13, 2010.

Council on Environmental Quality (CEQ). 1997. Environmental Justice Guidance under the National Environmental Policy Act. December 10, 1997.

DeGraff, R.M. and M. Yamasaki. 2001. New England Wildlife: Habitat, Natural History, and Distribution. Lebanon, New Hampshire: University Press of New England.

Donelson, S., N. Costello, C. Brosius, and D. Snyder. 2010. Reviving the Lake Sturgeon in the Lake Champlain Watershed. Available online: http://www.uvm.edu/~wbowden/Teaching/Risk_Assessment/Resources/Public/Projects/Project_docs2010/Team%2010%20Lake%20Sturgeon%20FinalPaperPDF.pdf. Accessed December 12, 2014.

Dudley, P.E., John B. 1993. Trails in Vermont. Waterbury, VT: Vermont Agency of Natural Resources Geographic Information Systems Office. URL: http://vcgi.vermont.gov/.

Economic Profile System-Human Dimensions Toolkit (EPS-HDT). 2014. State and Counties of Vermont Report, November 2014.

Engstrom, Erik. 2011. Facilities Landfills. Waterbury, VT: Vermont Agency of Natural Resources Geographic Information Systems Office. URL: http://vcgi.vermont.gov/.

Environmental Working Group (EWG). 2011. National Drinking Water Database. Accessed Online. URL: http://www.ewg.org/tap-water/VermontDrinkingWaterQualityReport/.

Epsilon Associates. 2006. *Hudson River PCBs Superfund Site: Phase 1 Final Design Report, Attachment J - Noise Impact Assessment.* Prepared for General Electric Company. March 21, 2006.

Exponent. 2014. Overland Magnetic Field Report for the New England Clean Power Link Project. Bowie, MD.: Exponent.

Exponent. 2014a. Submarine Cable DC Magnetic Field in Lake Champlain and Marine Assessment. Prepared for Champlain VT, LLC d/b/a TDI-NE. November 29, 2014.

Exponent. 2014b. Temperature Gradients in the Vicinity of NECPL Cables and Potential Effects on Water Quality, Bioavailability of Mercury, and Macroinvertebrates. Prepared for TDI-NE. December 1, 2014.

Federal Emergency Management Agency (FEMA). 2014. FEMA Map Service Center. Available online: http://msc.fema.gov/portal.

Fisheries Technical Committee (FTC). 2009. Strategic Plan for Lake Champlain Fisheries. Lake Champlain Fish and Wildlife Management Cooperative, FWS. Essex Junction, VT.

Flanagan, S.M., Ayotte, J.D., and Robinson, G.R., Jr. 2012. Quality of Water from Crystalline Rock Aquifers in New England, New Jersey, and New York, 1995–2007. U.S. Geological Survey Scientific Investigations Report 2011–5220, 104 p.

Fort Ticonderoga Ferry (FTF). 2014. Welcome Page. Online. URL: http://www.forttiferry.com/. Accessed December 4, 2014.

Fort Ticonderoga Ferry (FTF). 2015. Fort Ticonderoga Ferry Route [map]. Whiting, VT: Fort Ticonderoga Ferry. URL: http://www.forttiferry.com/index.html.

Gill, A.B., M. Bartlett and F. Thomsen. 2012. Potential Interactions between Diadromous Fishes of U.K. Conservation Importance and the Electromagnetic Fields and Subsea Noise from Marine Renewable Energy Developments. Journal of Fish Biology 81: 664- 695.

GIS Administrator, Vermont Forest and Parks. 1999. Vermont Outdoor Recreation Sites Inventory. Waterbury, VT: Vermont Forest and Parks Department. URL: http://vcgi.vermont.gov/.

GIS Database Administrator. 2003. Electric Transmission Line Corridors. Waterbury, VT: Vermont Center for Geographic Information. URL: http://vcgi.vermont.gov/.

GIS Database Administrator. 2011. Natural Resource Conservation Service County Soil Surveys. Waterbury, VT: GIS Database Administrator. URL: http://vcgi.vermont.gov/.

Grandmaison, D., J. Mayasich and D. Etnier. 2004. Eastern Sand Darter Status Assessment. Prepared for FWS, Fort Snelling, MN. Natural Resource Research Institute Report No. NRRI/TR-2003/40.

Green Mountain Club. 2006. Long Trail System Trail Network. Waterbury Center, VT: Green Mountain Club. URL: http://vcgi.vermont.gov/.

Grismer, Mark E., A.T. O'geen, and D. Lewis. 2006. (Grismer et al. 2006). *Vegetative Filter Strips for Nonpoint Source Pollution Control in Agriculture*. University of California, Division of Agriculture and Natural Resources.

HDR Engineering, Inc. (HDR). 2014a. New England Clean Power Link Project, Lake Champlain, Freshwater Mussel Survey Report. Prepared for Champlain VT, LLC.

HDR Engineering, Inc. (HDR). 2014b. Lake Champlain Water Quality Monitoring Report. New England Clean Power Link. Prepared for TDI-NE. December 2014.

Henry Sheldon Museum. 2004. From the Land to the Lake, An Online Learning Kit Developed by the Henry Sheldon Museum of Vermont History. Middlebury, Vermont. http://www.henrysheldonmuseum.org/land_to_lake/articles/natural_history.html. Accessed December 7, 2014.

Heiter, Kristen. 2014. *Technical Report-Phase I Archaeological Reconnaissance Survey New England Clean Power Link Project – Overland Portion Windsor, Rutland, and Grand Isle Counties, Vermont*. The Public Archaeology Laboratory, Inc. November 2014.

Hussain, Q.A. and A.K. Pandit. 2012. Macroinvertebrates in Streams: A Review of Some Ecological Factors. International Journal of Fisheries and Aquaculture 4(7):114-123.

Intergovernmental Panel on Climate Change (IPCC). 2014. IPCC Fifth Assessment Synthesis Report Summary for Policymakers. http://ipcc.ch/pdf/assessment-report/ar5/syr/SYR_AR5_SPMcorr1.pdf.

Institute for Sustainable Energy (ISE). 2003. *Comprehensive Assessment and Report Part II, Environmental Resources and Energy Infrastructure of Long Island Sound*. Prepared for ISE by Task Force on Long Island Sound. June 3, 2003.

ISO-New England (ISO-NE). 2014. 2014 Regional System Plan. ISO-New England, Inc. November 6, 2014. http://www.iso-ne.com/system-planning/system-plans-studies/rsp.

ISO-New England (ISO-NE). 2015. Interconnection Request Queue 02-01-15. Online: http://www.iso-ne.com/static-assets/documents/2014/09/interconnection_request_queue.xls.

Kaliski, Ken. 2014. New England Clean Power Link Project- Noise Impact Assessment for Converter Station. Resource Systems Group, Inc.

Kart, J., R. Regan, S.R. Darling, C. Alexander, K. Cox, M. Ferguson, S. Parren, K. Royar, B. Popp, editors. 2005. Vermont's Wildlife Action Plan. B Vermont Fish & Wildlife Department. Waterbury, Vermont.

Kavet, Thomas. 2014. Petitioners Pre-filed Direct Testimony of Thomas Kavet. December 8, 2014.

Lake Champlain Basin Program (LCBP). 2006a. Fact Sheet Series Number 3: The Basin. Available online: http://www.lcbp.org/wp-content/uploads/2013/03/Basinfs2006.pdf. Accessed December 12, 2014.

Lake Champlain Basin Program (LCBP). 2006b. Fact Sheet Series Number 2: Nonpoint Pollution. Available online: http://www.lcbp.org/wp-content/uploads/2012/08/npsfactsheet2006.pdf. Accessed December 12, 2014.

Lake Champlain Basin Program (LCBP). 2012. State of the Lake and Ecosystem Indicators Report 2012. Available online: http://www.lcbp.org/wp-content/uploads/2013/05/SOL2012-web.pdf. Accessed December 10, 2014.

Lake Champlain Basin Program (LCBP). 2014. "Lake and Basin Facts." Available online: http://www.lcbp.org/about-thebasin/facts/. Accessed December 11 2014.

Lake Champlain Ferries (LCF). 2014. Crossing Schedule & Rates. Online. URL: http://www.ferries.com/crossing-schedule-rates/charlotte-to-essex-ferry. Accessed December 4, 2014.

Lake Champlain Maritime Museum. (LCMM). *Phase I Archaeological Assessment in Support of the New England Clean Power Link Project -Lake Portion.* November 2014

Lake Champlain Transportation. (LCT). 2015. Lake Champlain Ferry Routes [map]. Burlington, VT: Lake Champlain Transportation Company. URL: http://ferries.com.

Marsden, J.E, B.D. Chipman, B. Pientka, W.F. Schoco, and B.A. Young. 2010. Strategic Plan for Lake Champlain Fisheries. Great Lakes Fish. Comm. Misc. Publ. 2010-03.

McIntosh, Alan. 1994. Lake Champlain Sediment Toxics Assessment Program. An Assessment of Sediment-Associated Contaminants in Lake Champlain – Phase 1. Technical report No. 5A. Prepared by Alan McIntosh (Editor) UVM School of Natural Resources for Lake Champlain Management Conference. February 1994. http://www.lcbp.org/wp-content/uploads/2012/08/5A_Sediment_Toxics_Exec_Feb1994.pdf. Accessed 12/7/2014.

Medalie, L. and Horn M. A. 2010. Estimated Water Withdrawals and Return Flows in Vermont in 2005 and 2012. U. S. Geological Survey. Scientific Investigations Report 2010-5053, 53 p.

Medalie, L. 2013. Concentration, Flux, and the Analysis of Trends of Total and Dissolved Phosphorus, Total Nitrogen, and Chloride in 18 Tributaries to Lake Champlain, Vermont and New York, 1990-2011. U. S. Geological Survey. Scientific Investigations Report 2013-5021. 29 p.

Michael Theriault Acoustics, Inc. 2013. Noise Level Evaluation for the West Point Transmission Project. Portland, Maine. Report No. 1899. June 2013.

National Climatic Data Center (NCDC). 2008. Climatography of the U.S. No. 20 1971-2000, *Monthly Station Climate Summaries*.

National Institute of Environmental Health Sciences (NIEHS). 2002. "EMF Electric and Magnetic Fields Associated with the Use of Electric Power Questions & Answers." June 2002. Available online: <http://www.niehs.gov/health/assests/docs_p_z/results_of_emf_research_emf_questions_answers_booklet.pdf>. Accessed 7 July 2012.

National Oceanic and Atmospheric Administration (NOAA). 2006. "Small Diesel Spills (500-5000 gallons)." Available online: http://archive.orr.noaa.gov/book_shelf/974_diesel.pdf. Accessed January 16, 2015.

National Oceanic and Atmospheric Administration (NOAA). 2014. "Magnetic Field Calculators" National Geophysical Data Center, December 2014. Available Online: http://www.ngdc.noaa.gov/geomag-web/#igrfwmm. Accessed 29 December 2014.

National Park Service (NPS). 2011. Nationwide Rivers Inventory. Available online: http://www.nps.gov/ncrc/programs/rtca/nri/index.html. Accessed December 17, 2014.

National Pipeline Mapping System. (NPMS). 2012. *Public Map Viewer [map]*. 2012. PHMSA – Pipeline and Hazardous Materials Safety Administration. https://www.npms.phmsa.dot.gov/PublicViewer/ (December 30, 2014).

New England Clean Power Link (NECPL). 2014. Summary of Economic and Public Good Benefits in Vermont. Exhibit TDI-JMB-6.

New York State Department of Environmental Conservation (NYSDEC). 2001. *Assessing and Mitigating Noise Impacts Program Policy*. Issued October 6, 2000. Revised 2 February 2001.

New York State Public Service Commission (NYSPSC). 2013. "Champlain Hudson Power Express, Inc., Order Granting Certificate of Environmental Compatibility and Public Need." Available online: <http://documents.dps.ny.gov/public/Common/ViewDoc.aspx?DocRefId=%7bA71423C8-B489-4996-9C5A-016C9F334FFC%7d>. Accessed 18 April 2013.

Normandeau Associates, Inc., Exponent, T. Tricas, and A. Gill. 2011. Effects of EMFs from Undersea Power Cables on Elasmobranchs and Other Marine Species. U.S. Department of the Interior, Bureau of Ocean Energy Management, Regulation and Enforcement, Pacific Outer Continental Shelf Region, OCS Study BOEMRE 2011-09. Camarillo, California.

Normandeau Associates, Inc. 2012. Deep Wind Block Island Wind Farm and Block Island Transmission System. Benthic Resources. Prepared for Tetra Tech and Deepwater Wind Block Island, LLC. April 2012.

Olausen, S., and C. Barry. 2014. *Technical Report-Historic Architectural Reconnaissance Survey, New England Clean Power Link Project-Overland Portion Grand Isle, Rutland, and Windsor Counties, Vermont.* The Public Archaeology Laboratory, Inc. November 2014.

Parker. Seth G. December 8, 2014. Direct Testimony of Seth G. Parker on Behalf of Champlain VT, LLC. December 8, 2014. http://necplink.com/docs/Champlain_VT_electronic/06%20S.%20Parker/2014-12-08%20Parker%20PFT%20Direct.pdf. Accessed January 19, 2015.

Perry, Meddie J., CGWP. 2014. Memorandum on Criteria 2 & 3 - Water Supply Preliminary Assessment. Prepared for TDI-NE New England Clean Power Link Project File. November 26, 2014.

Popper, A.N. and M.C. Hastings. 2009. The Effects of Human-generated Sound on Fish. Integrative Zoology 4: 43-52.

Rau, J. and D. Wooten. 1980. Environmental Impact Analysis Handbook. In J. Rau and D. Wooten (Ed.) New York, New York: McGraw-Hill.

Richardson, W.J., C.R. Greene, Jr., C.I. Malme, and D.H. Thomson. 1995. Marine Mammals and Noise. San Diego, CA: Academic Press. 576 pp.

Sabick, Christopher R., Sarah L. Tichonuk, and Alex W. Lehning. 2014. Phase 1 Archaeological Assessment in Support of the New England Clean Power Link Project – Lake Portion. Lake Champlain Maritime Museum. November 2014.

Saint Michael's College (Saint Michael's). 2014. "Most common macroinvertebrates found during the EPSCoR Streams Project." Available online: http://academics.smcvt.edu/Vermont_rivers/. Accessed December 5, 2014.

Schmidlin, S., D. Schmera, and B. Baur. 2012. Alien Molluscs Affect the Composition and Diversity of Native Macroinvertebrates In A Sandy Flat of Lake Neuchâtel, Switzerland. Hydrobiologia 679(1): 233-249.

Singer, Todd. 2014. Petitioners Prefiled Direct Testimony of Todd Singer. December 8, 2014.

State of Vermont. 2014. Explore Vermont's Byways. Online. URL: http://www.vermont-byways.us/Route_100. Accessed December 4, 2014.

Transmission Developers, Inc.-New England (TDI-NE). 2014a. Application of Champlain VT, LLC for a Presidential Permit for the New England Power Link HVDC Transmission Project. May 20, 2014.

Transmission Developers, Inc.-New England (TDI-NE). 2014b. New England Clean Power Link Project. Narrative on Project Description and Purpose. Application to USACE for construction permits pursuant to Section 404 of the Clean Water Act and Section 10 of the Rivers and Harbors Act of 1899.

Transmission Developers, Inc.-New England TDI-NE 2014c. Prefiled Direct Testimony of Donald Jessome, Eugene Martin and Joshua Bagnato on Behalf of Champlain Vt, LLC. December 8, 2014. Section 2-2.

Transmission Developers, Inc.-New England (TDI-NE). 2014d. Data Request #2. Memo from TDI-NE to DOE on October 24, 2014.

Transmission Developers, Inc.-New England (TDI-NE). 2014e. New England Clean Power Link Project. Mitigation Summary Table.

Transmission Developers, Inc.-New England (TDI-NE). 2014f. New England Clean Power Link Project Memorandum re: Preliminary Wetland Impact Analysis and Table. December 2, 2014.

Transmission Developers, Inc.-New England (TDI-NE). 2015. Data Request. Memo from TDI-NE on August 17, 2015..

Transmission Developers, Inc.-New England (TDI-NE). 2015a. Dunkiel Saunders Letter of Agreement with Conservation Law Foundation. June 12, 2015.

TRC Environmental Corporation (TRC). 2014. Survey Results Report: Rare, Threatened, and Endangered Species, Necessary Wildlife Habitat, and Natural Communities. November 2014.

TRC Environmental Corporation (TRC). 2014b. New England Clean Power Link – Section 248 Stormwater Technical Memorandum. November 25, 2014. Lowell, MA.

TRC Environmental Corporation (TRC). 2015. New England Clean Power Link Project. USACE Application for a Section 404/10 Permit. April 2015.

TRC Environmental Corporation and Vanasse Hangen Brustlin (TRC/VHB). 2014. Vegetation Management Plan. November 2014.

Trzaskos, S., and M. Malchoff. 2006. Aquatic Nuisance Species: A Primer for Lake Champlain Stakeholders. Great Lakes Sea Grant Fisheries Leadership Institute. Lake Champlain Sea Grant Program Publication LCSG-03-06.

U.S. Army Corps of Engineers (USACE). 2007 and Thompson and Sorenson (2005). Stream and Wetland Delineation as cited in Transportation Land Development Environmental Energy Services Memorandum to TDI-NE. November 7, 2014.

U.S. Army Corps of Engineers (USACE). 2011 *Regional Supplement to the Corps of Engineers Wetland Delineation Manual: Northcentral and Northeast Region Version 2.*

U.S. Army Corps of Engineers (USACE). 2014. Vermont Management Plan. USACE 404 Permit. Appendix G Attachment. November 6, 2014.

U.S. Census Bureau (USCB). 2014. State and County Quick Facts. http://quickfacts.census.gov/qfd/states/50/50007.html. Accessed 12/19/2014.

U.S. Department of Agriculture (USDA). 1959. Soil Conservation Service, Series 1963, No. 8 written in December 1959.

U.S. Department of Commerce (USDC). 2014. Bureau of Economic Analysis, Regional Economic Accounts, Washington, D.C.

U.S. Department of Energy (DOE). 2007. *Port Angeles-Juan de Fuca Transmission Project Final Environmental Impact Statement, DOE/EIS-0378*. October 2007.

U.S. Department of Energy (DOE). 2012. *Energia Sierra Juarez US Transmission Line Project Final Environmental Impact Statement*. June 2012.

U.S. Department of Energy (DOE). 2014. *Final Champlain Hudson Power Express Transmission Line Project Environmental Impact Statement.* DOE/EIS-0447. Volume 2, pp 2-12 to 2-28; pp 3-31 to 3-36; pp 3-110 to 3-111; pp 5-34 to 5-35; pp 5-88 to 5-90.August 2014.

U.S. Energy Information Administration (EIA). 2014. U.S. Energy-Related Carbon Dioxide Emissions, 2013. http://www.eia.gov/environment/emissions/state/state_emissions.cfm. Accessed January 19, 2015.

U.S. Department of the Interior Minerals Management Service (MMS). 2009. Cape Wind Energy Project Final EIS. January 2009.

U.S. Environmental Protection Agency (EPA). 1971. *Noise from Construction Equipment and Operations, Building Equipment and Home Appliances.* Prepared by Bolt, Beranek and Newman. December 31, 1971.

U.S. Environmental Protection Agency (EPA). 2011. National Emissions Inventory. Accessed November 25, 2014. http://www.epa.gov/ttn/chief/net/2011inventory.html.

U.S. Environmental Protection Agency (EPA). 2014a. VT Section 303(d) Approval Documentation. Letter to VT DEC. September 30, 2014.

U.S. Environmental Protection Agency (EPA). 2014b. Environmental Justice. Available online: http://www.epa.gov//environmentaljustice/. Accessed January 16, 2015.

U.S. Environmental Protection Agency. (EPA 2012g). *Final Champlain Hudson Power Express Transmission Line Project Environmental Impact Statement.* DOE/EIS-0447. August 2014. "Electricity Generation Energy Portal." Available online: <http://www.epa.gov/energy/electricity.html>. Accessed 4 September 2012.

U.S. Environmental Protection Agency (EPA) and the U.S. Geological Survey (USGS). 2005. National Hydrography Dataset Plus - NHDPlus [Regions 01 and 02]. URL: http://www.horizon-systems.com/nhdplus/.

U.S. Fish and Wildlife Service (FWS). 2007. *National Bald Eagle Management Guidelines.*

U.S. Fish and Wildlife Service (FWS). 2010. Effects of Oil on Wildlife and Habitat. Available online: http://www.fws.gov/home/dhoilspill/pdfs/DHJICFWSOilImpactsWildlifeFactSheet.pdf. Accessed January 16, 2015.

U.S. Fish and Wildlife Service (FWS). 2012. "Federally Listed Endangered and Threatened Species in Vermont." Available online: http://www.fws.gov/newengland/pdfs/VT%20species%20by%20town.pdf. Accessed December 5, 2014.

U.S. Fish and Wildlife Service (FWS). 2015. Trust Resources List. Concord, NH. IPaC inquiry (http://ecos.fws.gov/ipac/). April 15, 2015

U.S. Forest Service (USFS). 2005. Description of "Ecological Subregions: Sections of the Conterminous United States" First Approximation. U.S. Department of Agriculture, Forest Service Ecosystem Management Coordination Washington, DC 20250. September 2005. http://na.fs.fed.us/sustainability/ecomap/section_descriptions.pdf Accessed 12/7/2014.

U.S. Forest Service (USFS). 2014. Ecological Subregions of the United States. http://www.fs.fed.us/land/pubs/ecoregions/toc.htm. Accessed 12/7/2014.

U.S. Geological Survey (USGS). 2014. USGS National Seismic Hazard Maps. Vermont 2014 Seismic Hazard Map. http://earthquake.usgs.gov/earthquakes/states/vermont/hazards.php. Accessed 12/5/2014.

U.S. Geological Survey (USGS). 2014b. USGS Water Science School. Available online: http://water.usgs.gov/edu/wugw.html. Accessed December 16, 2014.

Vanasse Hangen Brustlin, Inc. (VHB). 2014. TDI-NE New England Clean Power Link Wetland and Waters Delineation. November 7, 2014.

Vanasse Hangen Brustlin, Inc. (VHB). 2014b. Wetland Impact Analysis and Table. December 2, 2014.

Vanasse Hangen Brustlin, Inc. (VHB). 2015. TDI-NE New England Clean Power Link Wetland and Waters Delineation. March 2015.

Vermont Agency of Natural Resources (VANR). (2004). New England Clean Power Link. Survey Results Report: Rare, Threatened, and Endangered Species, Necessary Wildlife Habitat, and Natural Communities. November 2014.

Vermont Agency of Natural Resources (VANR). 2014. Vermont Lake Champlain Phosphorus TMDL Phase 1 Implementation Plan. Vermont Agency of Natural Resources, Vermont Agency of Agriculture, Food, and Markets, Vermont Agency of Transportation. May 29, 2014.

Vermont Agency of Natural Resources (VANR). 2014b. Geographic Information Systems Office, Vermont Department of Environmental Conservation Watershed Management Division. 2014. Stormwater Infrastructure. Waterbury, VT: Vermont Agency of Natural Resources. URL: http://vcgi.vermont.gov/.

Vermont Agency of Natural Resources (VANR). 2015. Draft EPA Lake Champlain Phosphorus TMDL Vermont Phase 1 Plan. August 14, 2015.

Vermont Agency of Transportation (VTrans). 2013. 2012 (Route Log) AADTs State Highways. May 2013.

Vermont Agency of Transportation (VTrans). 2014. Environmental Procedures Manual. http://vtransenvironmentalmanual.vermont.gov/permit_progs/other/act250. Accessed November 24, 2014.

Vermont Agency of Transportation (VTrans). 2015. Statewide Transportation Improvement Program for Federal Fiscal Years 2015-2018. Online [URL]: http://vtrans.vermont.gov/sites/aot/files/documents/stip/2015%20FinalAmend1.pdf. Accessed April 2015.

Vermont Association of Snow Travelers (VAST). 2012. Intersection Points of VAST Trail Network. Barre, VT: Vermont Association of Snow Travelers. URL: http://vcgi.vermont.gov/.

Vermont Center for Geographic Information (VCGI). 2014. http://vcgi.vermont.gov/sites/vcgi/files/static_maps/towns_large.pdf. Accessed 11/24/2014.

Vermont Department of Environmental Conservation (VDEC). 2002. Lake Champlain Phosphorus TMDL. Vermont Agency of Natural Resources and New York State Department of Environmental Conservation. September 25, 2002.

Vermont Department of Environmental Conservation (VDEC). 2003. Report on the Status of Groundwater and Aquifer Mapping in the State of Vermont.

Vermont Department of Environmental Conservation (VDEC). 2010. Environmental Protection Rules Chapter 21 Water Supply rule. December 1, 2010. Available online: http://drinkingwater.vt.gov/dwrules/pdf/vtwsr2010.pdf. December 1, 2010. Accessed December 16, 2010.

Vermont Department of Environmental Conservation (VDEC). 2011. Private Wells. Waterbury, VT: Vermont Agency of Natural Resources. URL: http://vcgi.vermont.gov/.

Vermont Department of Environmental Conservation (VDEC). 2012. Annual Solid Waste Diversion & Disposal Reports. http://www.anr.state.vt.us/dec/wastediv/solid/DandD.htm.

Vermont Department of Environmental Conservation (VDEC). 2015. Air Quality and Climate Division, Vermont Greenhouse Gas Emissions Inventory Update 1990-2012. June 2015.

Vermont Department of Environmental Conservation (VDEC). 2014a. Air Quality and Climate Division, Agency of Natural Resources, Air Pollution Control Regulations, Subchapter III, adopted July 5, 2014. http://www.anr.state.vt.us/air/docs/regs2014/AQCD%20Reg%202014%20Subch%20III.pdf#zoom=100.

Vermont Department of Environmental Conservation (VDEC). 2014b. "A Key to Common Vermont Aquatic Plant Species." Available online: http://www.anr.state.vt.us/dec/waterq/lakes/docs/lp_KeyToComAquaticPlants.pdf. Accessed December 5, 2014.

Vermont Department of Environmental Conservation (VDEC). 2014c. Vermont Water Quality Standards. Environmental Protection Rule Chapter 29. October 30, 2014.

Vermont Department of Environmental Conservation (VDEC). 2014d. Vermont 2014 Water Quality Integrated Assessment Report. Available online: http://www.watershedmanagement.vt.gov/mapp/docs/305b/mp_305b-2014.pdf. Accessed December 10, 2014.

Vermont Department of Environmental Conservation and New York State Department of Environmental Conservation (VDEC and NYSDEC). 2014. Lake Champlain Long-term Water Quality and Biological Monitoring Project. Data available online: http://www.watershedmanagement.vt.gov/lakes/htm/lp_longterm.htm. Accessed: December 18, 2014.

Vermont Department of Public Service. 2011. http://publicservice.vermont.gov/sites/psd/files/Pubs_Plans_Reports/State_Plans/Comp_Energy_Plan/2011/CEP%20Overview%20Page_Final%5B1%5D.pdf.

Vermont Fish and Wildlife Department (VFWD). 2005. Vermont's Wildlife Action Plan. Appendix A2, Fish Species of Greatest Conservation Need. November 22, 2005.

Vermont Fish and Wildlife Department, Waterbury (VFWD). 2012. "Endangered and Threatened Animals of Vermont - Vermont Natural Heritage Inventory". 15 November 2012. Available online: http://www.vtfishandwildlife.com/library/Reports_and_Documents/NonGame_and_Natural_Heritage/Rare_Threatened_and_Endangered_Species%20%20---%20lists/Endangered%20and%20Threatened%20Animals%20of%20Vermont.pdf. Accessed December 5, 2014.

Vermont Fish and Wildlife Department, Waterbury (VFWD). 2014. "Stocking Schedule for 2014." Available online: http://www.anr.state.vt.us/fwd/stockingschedule.aspx. Accessed December 1, 2014.

Vermont Fish & Wildlife Department (VFWD) and Vermont Agency of Natural Resources Geographic Information Systems Office. 2012. Fishing Access Areas. Waterbury, VT: Vermont Agency of Natural resources. URL: http://vcgi.vermont.gov/.

Vermont Natural Heritage Inventory (VNHI). 2012. Endangered and Threatened Animals of Vermont. November 15, 2012.

Vermont Natural Heritage Inventory (VNHI). 2015. Rare and Uncommon Native Vascular Plants of Vermont April 7, 2015. http://www.vtfishandwildlife.com/library/Reports_and_Documents/NonGame_and_Natural_Heritage/Rare_Threatened_and_Endangered_Species%20%20---%20lists/Rare_and_Uncommon_Native_Vascular_Plants_of_Vermont.pdf.

Vermont Natural Resources Council (VNRC). 2012. Municipal Planning for Groundwater Protection: Act 199 and Local Options for Groundwater Management. May 2012.

Vermont Rail System (VRS). 2014. VRS Route Map & Stations. Online. URL: http://www.vermontrailway.com/maps/regional_map.html Accessed December 4, 2014.

Vitatech. 2012. "EMF Fundamentals." Available online: <http://www.vitatech. net/emf_fundamentals.php4>. Accessed 25 July 2012.

Waste Management & Prevention Diversion (WM&PD). 2015. 2013 Diversion and Disposal Report: A summary of solid management in the State of Vermont. March 2015.

Zhang, X., J. Song, C. Fan, H. Guo, X. Wang, and H. Bleckmann. 2012. Use of Electrosense in the Feeding Behavior of Sturgeons. Integrative Zoology 7(1):74-82.

This Page Intentionally Left Blank

9 ACRONYMS AND ABBREVIATIONS

<	Less than
µg/l	Micrograms per Liter
$\mu g/m^3$	Micrograms per Cubic Meter
AC	Alternating Current
ACHP	Advisory Council on Historic Preservation
APE	Area of Potential Effect
AQCD	Air Quality and Climate Division
AQCR	Air Quality Control Region
BGEPA	Bald and Golden Eagle Protection Act
Bg	Measurement Indistinguishable from Background
BMP	Best Management Practice
BOD	Biological Oxygen Demand
CAA	Clean Air Act
CEP	Comprehensive Energy Plan
CEQ	Council on Environmental Quality
CFR	Code of Federal Regulations
CH_4	Methane
CHPE	Champlain Hudson Power Express Project
CHPE FEIS	Champlain Hudson Power Express Project Final Environmental Impact Statement
CO	Carbon Monoxide
CO_2	Carbon Dioxide
Consulting Parties	Advisory Council on Historic Preservation, Vermont SHPO, tribes, and the U.S. Bureau of Indian Affairs
CRMP	Cultural Resources Management Plan
CWA	Clean Water Act
dB	Decibel
dBA	A-weighted Decibel
dbh	Diameter at Breast Height
DC	Direct Current
DOE	U.S. Department of Energy
DP	Dissolved Phosphorus
DWA	Deer Wintering Area
EFH	Essential Fish Habitat
EIS	Environmental Impact Statement
ELF	Extremely Low Frequency
EM&CP	Environmental Management and Construction Practices
EMF	Electric and Magnetic Field
EMI	Electromagnetic Interference
EO	Executive Order
EPA	U.S. Environmental Protection Agency
EPSC	Erosion Prevention and Sediment Control
EPS-HDT	Economic Profile System-Human Dimensions Toolkit
ERRP	Emergency Repair and Response Plan
ESA	Endangered Species Act

Feet/day	Feet per Day
FEMA	Federal Emergency Management Agency
FWS	U.S. Fish and Wildlife Service
g	gravity
G	Gauss
GHG	Greenhouse Gases
GIS	Geographic Information System
GPS	Global Positioning System
HAP	Hazardous Air Pollutants
HASP	Health and Safety Plans
HDD	Horizontal Directional Drilling
HDPE	High-density Polyethylene
HVDC	High Voltage Direct Current
Hz	Hertz
ICNRP	International Committee for Non-Ionizing Radiation Protection
ISO-New England	Independent System Operator of New England
kV	Kilovolt
kV/m	Kilovolts per Meter
LCTC	Lake Champlain Transportation Company
Leq	Equivalent Continuous Noise Level
MBTA	Migratory Bird Treaty Act
MEN	Mid-Atlantic Area Council, East Central Area Reliability, and Northeast Power Coordinating Council
mG	Milligauss or one thousandth of a G
mg/l	Milligrams per Liter
Mgal/d	Million Gallons per Day
MP	Mile Post
MPH	Miles per Hour
MPT	Maintenance and Protection of Traffic
MSDS	Material Safety Data Sheets
MSL	Mean Sea Level
MW	Megawatt
N	Nitrogen
NAAQS	National Ambient Air Quality Standards
NECPL	New England Clean Power Link
NEPA	National Environmental Policy Act
NESC	National Electric Safety Code
NFIP	National Flood Insurance Program
NHI	Vermont Natural Heritage Inventory
NHPA	National Historic Preservation Act
NMFS	National Marine Fisheries Service
N_2O	Nitrous Oxide
NO_x	Nitrogen Oxides
NO_3	Nitrate

NO_2	Nitrogen Dioxide
NOA	Notice of Availability
NOI	Notice of Intent
NPDES	National Pollutant Discharge Elimination System
NRHP	National Register of Historic Places
NRI	Nationwide Rivers Inventory
NTU	Nephelometric Turbidity Units
NYSDEC	New York State Department of Environmental Conservation
O_3	Ground-Level Ozone
O&M	Operation and Maintenance
OSHA	Occupational Safety and Health Administration
OTE	Open Trench Excavation
OTR	Ozone Transport Region
PA	Programmatic Agreement
PAH	Polycyclic Aromatic Hydrocarbon
PAL	Public Archaeology Laboratory
Pb	Lead
PCB	Polychlorinated Biphenyl
PEM	Palustrine Emergent
PFO	Palustrine Forested
PM	Particulate Matter
PPBV	Parts per Billion by Volume
PPE	Personal Protective Equipment
PPMV	Parts per Million by volume
Project	New England Clean Power Link Transmission Line Project
PSS	Palustrine Scrub-Shrub
PUB	Palustrine Unconsolidated Bottom
RACM	Reasonably Available Control Measures
RACT	Reasonably Available Control Technology
REC	Renewable Energy Credit
RES	Renewable Energy Standard
ROD	Record of Decision
ROI	Region of Influence
ROV	Remotely Operated Vehicle
ROW	Rights of Way
RSG	Resource Systems Group
SAV	Submerged Aquatic Vegetation
SIP	State Implementation Plan
SO_2	Sulfur Dioxide
SPEED	Sustainably Priced Energy Enterprise Development
SPA	Source Protection Area
SPCC	Spill Prevention, Control, and Countermeasures
SPP	Source Protection Plan
STIP	Statewide Transportation Improvement Program
TDI-NE	Transmission Developers, Inc.-New England
TMDL	Total Maximum Daily Load

TN	Total Nitrogen
TP	Total Phosphorus
TSS	Total Suspended Solids
USACE	U.S. Army Corps of Engineers
U.S.C.	U.S. Code
USCG	U.S. Coast Guard
USDA	U.S. Department of Agriculture
USFS	U.S. Forest Service
USGS	U.S. Geological Survey
VANR	Vermont Agency of Natural Resources
VAST	Vermont Association of Snow Travelers
VCGI	Vermont Center for Geographic Information
VDEC	Vermont Department of Environmental Conservation
VELCO	Vermont Electric Power Company
VER	Variable Energy Resources
VFWD	Vermont Fish and Wildlife Department
VOC	Volatile Organic Compound
V.S.A.	Vermont Statutes
VTPSB	Vermont Public Service Board
VTSHPO	Vermont State Historic Preservation Officer
VTrans	Vermont Agency of Transportation
VWQS	Vermont Water Quality Standards
VWP	Vermont Wetland Program
VWR	Vermont Wetland Rules
WHO	World Health Organization
WMA	Wildlife Management Area
XLPE	Cross-linked Polyethylene

10 GLOSSARY

Alternating Current (AC) – Current that varies, or cycles, over time in both magnitude and polarity.

Aquifer – An underground body of porous materials, such as sand, gravel, or fractured rock, filled with water and capable of yielding useful quantities of water to a well or spring.

Bedrock – Solid rock beneath the soil and superficial rock.

Benthic – Pertaining to, or occurring at the bottom of a body of water, such as a riverbed or a lakebed.

Bentonite – A naturally-occurring clay that is the principle substance used in horizontal directional drilling fluids, along with water.

Best Management Practices (BMPs) – Industry-standard practices that are implemented to reduce the potential for adverse impacts to occur on a resource.

Capacity – The maximum load that a generator, piece of equipment, substation, transmission line, or system can carry under design service conditions.

Carbon Monoxide (CO) – An odorless and colorless gas formed from one atom of carbon and one atom of oxygen.

Catadromous – Living in freshwater and migrating to saltwater to spawn.

Cofferdam – A temporary enclosure built within a waterbody that creates a water-free work environment.

Construction Corridor – The limits of construction activity, which include the area needed for excavation, installation of the transmission cables, stockpiling of excavated material, movement of construction equipment, and installation of erosion and sediment control measures.

Converter Station – A special type of substation that converts electrical power from direct current to alternating current or vice versa. A converter station connects to a point of interconnection with the regional electrical grid.

Criteria Pollutants – A group of six common air pollutants that are regulated by the National Ambient Air Quality Standards (standards established to protect public health or the environment). The six criteria pollutants are carbon monoxide, lead, nitrogen dioxide, ozone, two size classes of particulate matter (less than 10 micrometers [0.0004 inch] in diameter, and less than 2.5 micrometers [0.0001 inch] in diameter), and sulfur dioxide.

Critical Habitat - A specific geographic area(s) that contains features essential for the conservation of a threatened or endangered species and that may require special management and protection.

Cumulative Impact – Impact on the environment that results when the incremental impact of a proposed action is added to the impacts from other past, present, and reasonably foreseeable future actions regardless of what agency (federal or non-federal) or person undertakes the other actions. Cumulative impacts can result from individually minor but collectively significant actions taking place over a period of time.

Current (Electric) (see also **Alternating Current** and **Direct Current**) – The amount of electrical charge (i.e., electrons) flowing through a conductor (as compared to voltage, which is the force that drives the electrical charge).

Decibel (dB) – A unit for expressing the relative intensity of sounds on a logarithmic scale that quantifies sound intensity.

Demersal – Living or occurring in close relation with the bottom of a waterbody (e.g., lake, river or ocean).

Dewater – To remove water.

Diadromous (of a fish) – Anadromous and catadromous; migratory between salt and fresh waters.

Dielectric – A nonconductor of direct electric current.

Direct Current (DC) – Current that is steady and does not change sinusoidally (periodically) with time.

Direct Effect - As defined in the Council on Environmental Quality (CEQ) regulations (40 CFR 1508.8(a)), direct effects are those "which are caused by the action and occur at the same time and place."

Easement – A grant of certain rights to the use of a parcel of land (which then becomes a "right-of- way"). This includes the right to enter the right-of-way to build, maintain, and repair the facilities. Permission for these activities is included in the negotiation process for acquiring easements over private land.

Electric Field - A region around a charged particle or object within which a force would be exerted on other charged particles or objects.

Electric and Magnetic Field (EMF) – An extremely low frequency magnetic and electric field, ranging from 3 to 3,000 Hertz (Hz).

Electromagnetic Interference (EMI) – An electromagnetic disturbance from an external source that carries rapidly changing electrical currents, such as an electrical circuit or the sun, that interrupts, obstructs, or otherwise degrades or limits the effective performance of electronics and electrical equipment.

Element Occurrence (EO) - The Element Occurrence data standard is the product of a collaboration among NatureServe network scientists to improve the consistency and accuracy of EO data throughout the network. It sets out a standardized vocabulary and definitions and establishes guidelines for the collection and management of EO attribute data as well as their spatial representation on maps.

Endangered (Species) – Plants or animals that are in danger of extinction through all or a significant portion of their ranges and that have been listed as endangered by the U.S. Fish and Wildlife Service or the National Marine Fisheries Service following the procedures outlined in the Endangered Species Act and its implementing regulations (50 CFR Part 424).

Endangered Species Act (ESA) – A 1973 federal law, amended in 1978 and 1982, to protect troubled species from extinction. The U.S. Fish and Wildlife Service and National Marine

Fisheries Service decide whether to list species as Threatened or Endangered. Under the ESA, federal agencies must avoid jeopardy to and aid the recovery of listed species.

Environmental Impact Statement (EIS) – A detailed, written statement, as required by the National Environmental Policy Act that analyzes the potential environmental impacts of a proposed major federal action that could significantly affect the quality of the human environment.

Environmental Management and Construction Plan (EM&CP) – A plan developed by TDI-NE that documents environmental and construction management procedures and plans to be implemented during CHPE Project construction activities to avoid or minimize impacts to the environment.

Essential Fish Habitat (EFH) – The waters and substrate necessary to fish for spawning, breeding, feeding, or growth to maturity (Magnuson Fishery Conservation and Management Act).

Extremely Low Frequency (ELF) **-** Extremely low frequency refers to an electromagnetic field having a frequency much lower than the frequencies of signals typically used in communications. ELFs include alternating current (AC) fields and other electromagnetic, non-ionizing radiation from 1 Hz to 300 Hz

Federally Listed – Species listed as Threatened or Endangered under the federal Endangered Species Act.

Floodplain – That portion of a river valley adjacent to the stream channel which is covered with water when the stream overflows its banks during flood stage.

Fugitive Dust – Particulate matter or dust that is released into the air from disturbance of granular material (soil) by mechanical equipment or vehicles.

Gauss – A unit of measure, abbreviated as G that is commonly used to express the strength or intensity of magnetic fields.

Geographic Information System (GIS) – A system designed to capture, store, manipulate, analyze, manage, and present all types of geographical data.

Gifford Grapnel - A gifford grapnel is composed of units of four hooks at right angles to each other. The hooks resemble a crane hook with a broad hookseat to form a cup to hold the hooked cable. It can be used on any type of bottom but was originally designed for rocky or coral environments**.** Often used in tandem with a rennie grapnel.

Grapnel - Grappling operations are performed to recover cable or ground-rope from the seabed or to clean up the seabed prior to cable or pipe installations.

Greenhouse Gas (GHG) – Those gases, such as water vapor, carbon dioxide, nitrous oxide, methane, hydrofluorocarbons (HFCs), perfluorocarbons (PFCs) and sulfur hexafluoride, that are transparent to solar (short-wave) radiation but opaque to long-wave (infrared) radiation, thus preventing long-wave radiant energy from leaving Earth's atmosphere. The net effect is a trapping of absorbed radiation and a tendency to warm the planet's surface.

Groundwater – Water below the ground surface in a zone of saturation.

Hertz (Hz) – Frequency/oscillatory rate of an alternating electric current, measured in number of cycles per second (1 Hz is equal to one cycle per second).

Hibernaculum (see also **Hibernacula**) – A location chosen by an animal for hibernation.

High-voltage – With respect to electric power transmission, high-voltage is usually considered any voltage greater than approximately 35,000 volts. This classification is also based on the design of apparatus and insulation.

Horizontal Directional Drilling (HDD) – A steerable trenchless method of installing underground pipes, conduits, and cables in a shallow arc along a prescribed bore path by using a surface-launched drilling rig. This method allows pipes and conduits to be installed under water bodies, parks, roadways, and other features with minimal impact on the resource or surrounding area.

Hydrology – The science dealing with the properties, distribution, and circulation of water.

Insulator – A material that is a very poor conductor of electricity. The insulating material is usually a ceramic or fiberglass when used in the transmission line and is designed to support a conductor physically and to separate it electrically from other conductors and supporting material.

Interconnection – Two or more electric systems having a common transmission line that permits a flow of energy between them. The physical connection of the electric power transmission facilities allows for the sale or exchange of energy.

Invasive Species – A non-indigenous plant or animal species that can harm the environment, human health, or the economy.

Invertebrate – Any animal without a backbone or spinal cord; any animal other than a fish, amphibian, reptile, bird, or mammal.

Jet Plow (see also **Water Jetting**) – A plow that uses water jets in the process of installing an aquatic transmission cable. The jet plow is equipped with hydraulic pressure nozzles that create a downward and backward flow within the trench, fluidizing the sediment, and allowing the transmission cables to settle into the trench under its own weight before the sediments settle back into the trench.

Lake Champlain Segment - The Lake Champlain Segment will include construction, operation, and maintenance of a 1,000-MW, high-voltage electric power transmission system that will have aquatic (underwater) segments in the State of Vermont. The Lake Champlain Segment (underwater portion) of the transmission line will be buried in the bed of Lake Champlain, except at depths of greater than 150 feet where the cables are proposed to be placed on the bottom.

Magnetic Field - The magnetic influence of electric currents and magnetic materials. The magnetic field at any given point is specified by both a direction and a magnitude (or strength); as such it is a vector field.

Mechanical Plowing (see also **Shear plow)** – One of the proposed installation methods for the aquatic transmission cable route. The mechanical plowing process uses a shear plow in which a plow blade excavates cuts into the lake or river bed and pushes sediment aside as it is pulled by a cable ship or barge. The transmission line cables are then fed into the trench before the sediment collapses back into the trench created by the plow blade.

Milepost (MP) – A method of indicating the distance of the proposed CHPE Project route in miles from its northern to southern endpoints.

Milligauss (mG) – A unit of measure used to express the strength or intensity of magnetic fields; a thousandth of a gauss.

Mitigation – Action taken to reduce the potential for unavoidable adverse impacts caused by the transmission project to resources. Mitigation measures often include the creation of new wetland areas, the purchase of ecologically-sensitive lands, or the funding of environmental research and public education programs.

National Environmental Policy Act (NEPA) – The basic national charter for protection of the environment. For major federal actions significantly affecting the quality of the human environment, NEPA requires federal agencies to prepare a detailed environmental impacts statement that includes the environmental impacts of the proposed action and other specified information.

Notice of Intent (NOI) – A public notice that an environmental impact statement will be prepared and considered in the decision making for a proposed action.

Open Trench Excavation (OTE). The open cut method of construction involves deploying temporary in-stream flow diversion structures, digging an OTE across the stream channel, installing the transmission cable, backfilling with suitable materials, and restoring the stream bank and channel bottom.

Overland Segment - The Overland Segment will include construction, operation, and maintenance of a 1,000-MW, high-voltage electric power transmission system that will have terrestrial (underground) segments in the State of Vermont. The Overland Segment of the transmission line will be buried underground within roadway rights-of-way (ROWs).

Ozone – A molecule made up of three atoms of oxygen. Occurs naturally in the stratosphere and provides a protective layer shielding the Earth from harmful ultraviolet radiation. In the troposphere, it is a chemical oxidant, a greenhouse gas, and a major component of photochemical smog.

Particulate Matter (PM) - An air pollution term for a mixture of solid particles and liquid droplets found in the air. The pollutant comes in a variety of sizes and can be composed of many types of materials and chemicals. Particles that are small enough to be inhaled have the potential to cause health effects.

Perennial (Streams or Creeks) – Those with year-round water flow.

Project Route – The project will connect a HVDC transmission line in the Canadian Province of Quebec and transmit electric power to a proposed HVDC converter station in the Town of Ludlow, Vermont.

Reactive Power – A characteristic of alternating current systems, is the energy supplied to create or be stored in electric or magnetic fields in and around electrical equipment

Real Power – The form of electricity that powers equipment.

Region of Influence (ROI) – The geographic extent being evaluated for each particular resource area in the Environmental Impact Statement. The ROI may vary among resource areas, and is determined based on regulatory requirements combined with the expected maximum area of measurable impacts for that particular resource.

Reliability (Electric System) – The ability of a power system to continue operation and provide uninterrupted service, even while that system is under stress.

Rennie Grapnel - The rennie chain Grapnel is composed of flat links, each having a double fluke bolted to it; links are shackled together in sets of four in the form of a chain, with successive links and flukes being at right angles to each other. The Rennie chain grapnel can be used on any type of seabed but was originally designed for rocky environments. It is normally used with a set of Gifford grapnels to provide weight and back-up for varying seabed conditions.

Revegetate – Re-establishing vegetation on a disturbed site.

Right-of-way (ROW) – A corridor or lands reserved for placement of infrastructure such as a highway, railway, electric transmission line, or pipeline.

Riparian Habitat – The zone of vegetation that extends from the water's edge landward to the edge of the vegetative canopy. Associated with watercourses such as streams, rivers, springs, ponds, lakes, or tidewater.

Scoping – An early and open process for determining the scope of issues to be addressed in an environmental impact statement and for identifying the significant issues related to a proposed action.

Sedimentation – The deposition or accumulation of sediment.

Seismicity – The frequency or magnitude of earthquake activity in a given area.

Shear Plow (see also **Mechanical Plowing**) – Plow used during the mechanical plowing process of installing the aquatic transmission cable. A barge or ship tows the shear plow at a safe distance as the laying and burial operation proceeds. The plow is lowered to the lakebed or riverbed, and the plow blade cuts a trench in the lake or riverbed while it is towed along the pre-cleared route. The transmission cables are deployed from the vessel to a funnel on the plow device and then into the trench in a simultaneous lay-and-burial operation.

Spawn – To produce or deposit eggs.

Species – A group of interbreeding individuals not interbreeding with another such group; similar, and related species are grouped into a genus.

Submerged Aquatic Vegetation (SAV) – Generally includes rooted vascular plants that grow up to the water surface but not above. The definition of SAV usually excludes algae, floating plants, and plants that grow above the water surface.

Substation – A non-generating electrical power station that transforms voltages to higher or lower levels. Facility equipment that switches, changes, or regulates electric voltage.

Surface Water – Water collecting on the ground or in a stream, river, lake, sea or ocean.

Threatened (Species) – Plants or animals that are likely to become endangered species within the foreseeable future throughout all or a significant portion of their ranges and which have been listed as threatened by the U.S. Fish and Wildlife Service or the National Marine Fisheries Service following the procedures set out in the Endangered Species Act and its implementing regulations (50 CFR Part 424).

Transformer – A device that operates on magnetic principles to increase (step up) or decrease (step down) voltage.

Transmission Cable (see also **Transmission Line**) – An insulated conductor used for underground or submarine electric transmission applications.

Transmission Line – A set of conductors, insulators, supporting structures, and associated equipment used to move large quantities of power at high voltage, usually over long distances between a generating or receiving point and major substations or delivery points.

Turbidity – The state or condition of opaqueness or reduced clarity of a fluid, due to the presence of suspended matter.

Volt – The unit of electromotive force or electric pressure which, if steadily applied to a circuit having a resistance of one ohm, would produce a current of one ampere.

Voltage – The electrical force, or "pressure," that causes current to flow in a circuit, measured in Volts.

Water Jetting (see also **Jet Plow)** – One of the proposed installation methods for the aquatic transmission cable route. The water-jetting process uses a jet plow in which jets of pressurized water fluidize the sediments to enable a cable to be buried.

Watershed – The area that drains to a common waterway.

Wetlands – An area that is inundated or saturated by surface or groundwater with a frequency sufficient to support, and under normal circumstances do or would support, a prevalence of vegetative or aquatic life that requires saturated or seasonally saturated soil conditions for growth and reproduction. Wetlands generally include swamps, marshes, bogs, and similar areas (e.g., sloughs, potholes, wet meadows, river overflow areas, mudflats, natural ponds).

Zoning – Regulations used to guide growth and development; typically involve legally adopted restrictions on uses and building sites in specific geographic areas to regulate private land use.

This Page Intentionally Left Blank

11 INDEX

A

Acronyms, 1-8, 9-1
Affected Environment, 3-1
Air, vi, 2, 24, 1-5, 1-8, 2-30, 3-2, 3-36, 3-38, 3-40, 3-83, 5-34, 5-38, 5-69, 5-72, 6-9, 7-2, 8-10, 9-1, 9-2, 10-1
Air Pollutant, 5-34, 9-2
Air Quality, vi, 24, 1-8, 2-30, 3-2, 3-36, 3-38, 3-83, 5-34, 5-38, 5-69, 5-72, 6-9, 7-2, 8-10, 9-1, 9-2, 10-1
Alburgh, i, 1, 8, 9, 17, 20, 21, 23, 1-1, 2-3, 2-8, 2-11, 2-12, 2-15, 2-23, 2-26, 2-27, 2-29, 3-1, 3-2, 3-3, 3-7, 3-11, 3-12, 3-13, 3-15, 3-16, 3-19, 3-20, 3-64, 3-66, 3-68, 3-69, 5-7, 5-8, 5-18, 5-19, 5-20, 5-24, 5-27, 5-35, 5-67
Alternative
  No Action, i, 6, 16, 17, 1-2, 1-8, 2-1, 2-23, 4-1, 4-2
  Preferred, i, 7, 1-2, 2-1
Aquatic Habitats, 19, 2-25, 3-2, 3-11, 3-48, 5-8, 5-15, 5-44, 6-6, 6-7, 7-2
Aquatic Protected and Sensitive Species, 19, 1-8, 2-25, 3-2, 3-13, 3-53, 5-14, 5-45, 6-7, 7-2
Aquatic Species, 3-54, 5-14, 5-16
Archaeological Site, 3-67
Army Corps of Engineers, i, 2, 1-5, 7-1, 8-7, 9-4

B

BA, 7-3
Background, vi, 1, 1-1, 1-8, 3-1, 3-3, 3-5, 3-11, 3-13, 3-15, 3-16, 3-18, 3-19, 3-21, 3-26, 3-27, 3-33, 3-35, 3-36, 3-40, 3-42, 3-45, 3-46, 3-48, 3-53, 3-55, 3-57, 3-61, 3-62, 3-63, 3-79, 3-80, 3-81, 3-82, 3-83, 9-1
Barge, 3-23, 3-66
Bedrock, 10-1
Benefits, 3-61, 5-37, 8-5
Benson, 2, 8, 9, 17, 1-6, 2-3, 2-8, 2-11, 2-12, 2-15, 2-23, 3-2, 3-3, 3-7, 3-11, 3-13, 3-45, 3-46, 3-47, 3-48, 3-60, 3-64, 3-66, 3-69, 3-83, 3-85, 5-7, 5-8, 5-18, 5-22, 5-35, 5-40, 5-65, 5-67
Benson Landing, 3-3
Best Management Practices, 14, 5-9, 5-10, 5-11, 10-1
Biological, 3-10, 3-17, 5-11, 7-3, 8-10, 9-1
Biological Assessment, 7-3
BMP, 3-6, 9-1
Burlington, 5, 6, 1-3, 1-4, 1-7, 3-3, 3-20, 3-25, 3-32, 3-33, 3-44, 3-81, 8-4

C

Cable, 8, 9, 11, 13, 17, 2-8, 2-9, 2-12, 2-13, 2-15, 2-16, 2-18, 2-19, 2-23, 5-4, 5-5, 5-6, 5-15, 5-67, 8-2, 10-7
Cable Installation, 11, 13, 2-15, 2-16, 2-19, 5-6
Canada, i, 1, 7, 8, 9, 15, 17, 1-1, 1-2, 1-3, 1-5, 2-1, 2-8, 2-12, 2-22, 2-23, 3-5, 3-18, 3-23, 3-39, 3-60, 3-65, 5-4, 5-24, 6-1
Carbon, 3-38, 3-40, 8-8, 9-1, 10-1
Carbon Monoxide, 3-38, 9-1, 10-1
Castleton, 2-3, 3-46, 3-47, 3-48, 3-49, 3-66, 3-69, 5-49, 5-63, 6-4
CFR, 1, 2, 1-1, 1-2, 1-5, 3-16, 3-21, 3-22, 3-35, 3-38, 3-53, 3-57, 3-63, 3-64, 3-82, 4-1, 5-23, 5-28, 5-59, 5-64, 6-1, 7-1, 9-1, 10-2, 10-7
Champlain Hudson Express Project Final Environmental Impact Statement, 9-1
Champlain Valley, 3-19, 3-22, 3-23, 3-39, 3-40, 3-62, 3-63, 3-65, 3-66, 3-83
Channel, 3-55
CHPE FEIS, 15, 2-7, 2-22, 3-27, 3-34, 3-80, 3-81, 4-2, 5-2, 5-28, 5-29, 5-31, 5-64, 5-65, 6-6, 9-1
Clarendon, 8, 2-3, 2-8, 3-45, 3-46, 3-47, 3-48, 3-49, 3-69, 3-79, 5-40, 5-63
Clean Air Act of 1999, 2, 1-5, 9-1
Climate, 3-36, 3-38, 8-3, 8-5, 8-10, 9-1
Climate Change, 8-3
Code of Federal Regulations, 1, 1-1, 9-1
Cofferdam, 9, 22, 2-12, 2-28, 5-5, 5-8, 5-22, 5-25, 5-32, 10-1
Concrete Mat, 2-10
Construction, 1, 11, 17, 18, 19, 20, 21, 22, 23, 24, 25, 26, 1-1, 1-6, 2-7, 2-14, 2-15, 2-19, 2-23, 2-24, 2-25, 2-26, 2-27, 2-28, 2-29, 2-30, 2-31, 2-32, 3-21, 3-41, 3-64, 3-85, 5-1, 5-2, 5-4, 5-8, 5-14, 5-18, 5-19, 5-20, 5-21,

5-22, 5-23, 5-24, 5-27, 5-28, 5-30, 5-31, 5-32, 5-33, 5-34, 5-35, 5-38, 5-39, 5-40, 5-41, 5-42, 5-43, 5-44, 5-45, 5-46, 5-49, 5-52, 5-53, 5-55, 5-57, 5-58, 5-59, 5-60, 5-63, 5-64, 5-65, 5-66, 5-67, 5-68, 5-69, 5-70, 5-71, 5-72, 6-4, 6-5, 6-6, 6-9, 6-12, 7-1, 8-8, 9-1, 10-1, 10-3
Converter Station, 8, 10, 18, 22, 2-8, 2-15, 2-24, 2-28, 3-22, 3-48, 3-82, 5-39, 5-41, 5-42, 5-43, 5-58, 5-60, 5-62, 5-68, 5-71, 5-72, 8-4, 10-1
County
Addison, 3-24, 3-26, 3-41, 3-42, 6-4
Chittenden, 3-40, 3-41, 3-42, 3-44, 5-36, 6-4
Grand Isle, 3-20, 3-40, 3-41, 3-42
Rutland, 3-40, 3-41, 3-42, 3-44, 3-60, 3-84, 3-85, 3-86, 5-49
Windsor, 3-84, 3-85, 3-86
Critical Habitats, 10-1
Cultural Resources, 22, 1-8, 2-28, 3-2, 3-21, 3-23, 3-24, 3-63, 3-67, 3-68, 5-23, 5-24, 5-59, 6-5, 6-8, 6-12, 7-2, 9-1
Cumulative Impact, 16, 6-1, 6-5, 10-1

D

Direct Effect, 10-2

E

E.O., 2, 3-43
Eagle
Bald, 1-6, 3-18, 3-59, 5-49, 8-8
Ecology, 7-2
Economics, 3-26
Ecosystem, 8-4, 8-9
EFH, 1-8, 5-12, 5-14, 9-1, 10-3
Endangered, 2, 1-6, 3-15, 3-16, 3-17, 3-55, 3-57, 3-58, 3-59, 3-61, 8-7, 8-8, 8-9, 8-11, 9-1, 10-2, 10-3, 10-7
Endangered Specie, 2, 1-6, 3-15, 3-16, 3-57, 3-61, 8-7, 8-9, 9-1, 10-2, 10-3, 10-7
Environment, 3-1, 6-10, 6-12
Affected, 3-1
Environmental
Consequence, 16, 4-1, 5-1
Impact, 3, i, 1, 14, 1-1, 2-7, 8-1, 8-6, 8-7, 8-8, 9-1, 10-3, 10-6
Environmental Consequences, 16, 4-1, 5-1
Environmental Impact Statement, 3, i, vi, 1, 2, 5, 6, 7, 11, 14, 16, 1-1, 1-2, 1-3, 1-4, 1-5, 1-6, 1-7, 1-8, 2-1, 2-7, 3-21, 3-24, 3-32, 3-40, 3-43, 3-63, 3-81, 4-1, 5-66, 6-1, 6-8, 7-1, 7-2, 8-1, 8-7, 8-8, 9-1, 10-3, 10-6
Environmental Justice, vi, 26, 1-8, 2-32, 3-2, 3-42, 3-85, 5-38, 5-71, 6-5, 7-3, 8-1, 8-8
Environmental Protection Agency, i, 2, 1-5, 3-10, 7-1, 8-8, 9-1
EPA, i, 2, 5, 1-5, 1-7, 3-6, 3-10, 3-35, 3-36, 3-39, 3-40, 3-82, 3-83, 4-2, 5-30, 5-31, 5-34, 8-8, 9-1
Erosion, 3-6, 3-61, 5-42, 9-1
Essential Fish Habitat, 1-8, 5-12, 5-14, 9-1, 10-3
Executive Order, 1, 1-1, 3-42, 3-43, 9-1

F

Federal Regulation, 1, 1-1, 7-1, 9-1
Ferry, 2-15, 3-1, 3-3, 3-4, 3-26, 5-2, 5-12, 8-2, 8-4
Field
Electric, 10-2
Magnetic, 10, 3-32, 3-33, 3-81, 5-28, 5-29, 5-64, 5-65, 8-1, 8-2, 8-5, 9-1, 10-2, 10-4
Figure, 10, 2-5, 2-8, 2-9, 2-10, 2-11, 2-12, 2-13, 2-14, 2-16, 2-17, 2-18, 3-3, 3-4, 3-7, 3-9, 3-40, 3-43, 3-49, 3-51, 3-84
Figures, vi
Fish, 1-6, 1-8, 3-8, 3-13, 3-14, 3-17, 3-25, 3-53, 3-55, 5-4, 5-11, 5-12, 5-14, 5-15, 5-16, 5-24, 5-45, 7-1, 8-1, 8-2, 8-4, 8-6, 8-8, 8-11, 9-1, 9-2, 9-4, 10-2, 10-3, 10-7
Floodplain, 1, 1-1, 1-2, 3-5, 3-11, 3-57, 5-7, 5-42, 5-48, 10-3
Forest Service, 3-19, 8-9, 9-4

G

Geographic Information System, 8-2, 8-9, 8-11, 9-2, 10-3
Geology, 22, 1-8, 2-28, 3-2, 3-19, 3-35, 3-62, 3-63, 5-20, 5-22, 5-57, 5-58, 6-7, 7-2
GIS, 3-3, 3-46, 3-67, 3-83, 8-3, 9-2, 10-3
Glossary, 1-8, 10-1
Grapnel, 11, 10-3, 10-6
Greenhouse Gas, 3-39, 5-35, 5-70, 5-71, 6-9, 8-10, 9-2, 10-3
Ground Water, 3-3, 3-46, 3-61, 3-67, 3-83, 8-3, 9-2, 10-3

H

Habitat, 1-8, 3-8, 3-12, 3-14, 3-46, 3-49, 3-55, 3-57, 3-58, 3-61, 5-9, 5-12, 5-13, 5-14, 5-44, 5-45, 5-47, 5-54, 5-56, 6-11, 8-1, 8-7, 8-8, 8-9, 9-1, 10-1, 10-3, 10-6
Hazardous Materials, 24, 1-8, 2-30, 3-2, 3-35, 3-82, 5-33, 5-68, 6-5, 7-3, 8-5
HDD, 9, 10, 14, 17, 2-7, 2-11, 2-12, 2-14, 2-15, 2-20, 2-23, 3-1, 3-64, 3-79, 5-4, 5-5, 5-6, 5-8, 5-9, 5-16, 5-18, 5-20, 5-22, 5-25, 5-27, 5-32, 5-39, 5-40, 5-42, 5-43, 5-44, 5-45, 5-50, 5-57, 5-63, 5-66, 5-67, 5-69, 9-2, 10-4
Health and Safety, 23, 1-8, 2-29, 3-2, 3-27, 3-31, 3-79, 3-80, 5-28, 5-29, 5-38, 5-64, 5-65, 5-72, 6-9, 7-3, 9-2
Heritage, 3-15, 3-23, 3-66, 8-11, 9-2
Human Health, 3-42
Hydrology, 10-4

I

Index, 1-8, 11-1

J

Jet Plow, 10-4, 10-7

L

Lake Champlain, 2, i, 5, 7, 8, 11, 12, 17, 18, 23, 1-3, 1-4, 2-1, 2-7, 2-8, 2-9, 2-15, 2-17, 2-18, 2-19, 2-20, 2-23, 2-24, 2-30, 3-1, 3-2, 3-3, 3-4, 3-5, 3-7, 3-9, 3-10, 3-11, 3-12, 3-13, 3-14, 3-15, 3-16, 3-17, 3-18, 3-19, 3-20, 3-21, 3-22, 3-23, 3-24, 3-25, 3-26, 3-27, 3-31, 3-32, 3-33, 3-34, 3-35, 3-39, 3-40, 3-41, 3-42, 3-43, 3-44, 3-45, 3-47, 3-48, 3-53, 3-54, 3-60, 3-62, 3-64, 3-65, 3-66, 3-75, 3-79, 3-81, 3-82, 3-83, 5-1, 5-2, 5-3, 5-4, 5-5, 5-6, 5-7, 5-8, 5-9, 5-10, 5-11, 5-12, 5-13, 5-14, 5-15, 5-16, 5-17, 5-18, 5-19, 5-20, 5-21, 5-22, 5-23, 5-24, 5-25, 5-26, 5-27, 5-28, 5-29, 5-31, 5-32, 5-33, 5-34, 5-35, 5-36, 5-37, 5-38, 5-40, 5-45, 5-65, 5-67, 5-71, 6-1, 6-2, 6-5, 6-6, 6-7, 6-8, 6-9, 6-12, 8-2, 8-3, 8-4, 8-6, 8-7, 8-9, 8-10, 9-2, 10-4
Lake Champlain Segment, 5, 8, 11, 12, 17, 1-4, 2-8, 2-19, 2-20, 2-23, 3-1, 3-2, 3-3, 3-7, 3-9, 3-11, 3-13, 3-15, 3-16, 3-17, 3-18, 3-19, 3-20, 3-21, 3-23, 3-24, 3-25, 3-26, 3-27, 3-31, 3-32, 3-33, 3-34, 3-35, 3-39, 3-40, 3-41, 3-42, 3-43, 3-44, 3-45, 3-47, 3-53, 3-61, 3-62, 3-83, 5-1, 5-2, 5-3, 5-8, 5-9, 5-10, 5-11, 5-12, 5-14, 5-15, 5-16, 5-18, 5-19, 5-20, 5-21, 5-22, 5-23, 5-24, 5-25, 5-26, 5-27, 5-29, 5-32, 5-34, 5-35, 5-36, 5-38, 5-45, 5-65, 5-67, 5-71, 6-1, 6-7, 10-4
Lake Sturgeon, 8-1, 8-2
Land Use, 17, 1-8, 2-23, 3-1, 3-2, 3-45, 3-46, 5-1, 5-38, 6-5, 6-12, 7-2
Ludlow, i, 1, 7, 8, 9, 10, 17, 18, 22, 1-1, 1-3, 1-6, 2-1, 2-3, 2-7, 2-8, 2-12, 2-15, 2-23, 2-24, 2-28, 3-22, 3-45, 3-46, 3-47, 3-48, 3-57, 3-64, 3-66, 3-68, 3-69, 3-79, 3-82, 3-83, 5-39, 5-40, 5-41, 5-42, 5-43, 5-47, 5-49, 5-58, 5-60, 5-62, 5-63, 5-68, 5-71, 5-72, 6-3, 10-5

M

Maine, 3-17, 3-37, 3-65, 4-1, 7-2, 8-5
Maps, vi, 1-8, 8-9
Migratory Birds, 1-6, 3-16, 3-18, 3-60, 5-20, 5-50, 5-52, 9-2
Mile Post, 2-15, 3-3, 3-7, 3-13, 3-19, 3-25, 3-54, 3-70, 5-2, 5-3, 5-4, 5-5, 5-6, 5-8, 5-9, 5-11, 5-15, 5-24, 5-48, 9-2, 10-5
Missisquoi River, 3-54
Mitigation, vi, 1-8, 5-24, 8-7, 10-5
Mitigation Measures, vi, 1-8
Monitoring, 3-10, 5-55, 8-3, 8-10
Mount Holly, 2-3, 3-45, 3-46, 3-57, 3-69, 3-79, 5-47, 5-63
Mussels, 5-16, 5-17

N

National Ambient Air Quality Standards, 3-36, 3-37, 3-39, 9-2, 10-1
Native American, 2, 5, 1-3, 1-4, 3-21, 3-22, 3-23, 3-42, 3-65, 3-67
NECPL, 2, i, vi, 1, 2, 3, 5, 6, 7, 10, 11, 14, 15, 16, 17, 1-1, 1-2, 1-3, 1-4, 1-5, 1-6, 1-8, 2-1, 2-5, 2-7, 2-15, 2-18, 2-21, 2-23, 3-1, 3-2, 3-3, 3-5, 3-7, 3-12, 3-15, 3-17, 3-19, 3-21, 3-24, 3-26, 3-27, 3-31, 3-32, 3-33, 3-34, 3-35, 3-36, 3-39, 3-40, 3-42, 3-43, 3-45, 3-46, 3-47, 3-49, 3-53, 3-55, 3-58, 3-61, 3-62, 3-64, 3-71, 3-77, 3-79, 3-80, 3-81, 3-82, 3-84, 4-1, 4-2, 5-1, 5-21, 5-23, 5-24, 5-25, 5-26, 5-27, 5-28, 5-30, 5-31, 5-36, 5-37, 5-38, 5-40, 5-41, 5-44, 5-60, 5-61, 5-62, 5-63, 5-64, 5-66, 5-68, 5-71, 6-1, 6-2, 6-3, 6-4, 6-5, 6-6, 6-7, 6-8, 6-9, 6-10, 6-11, 6-12, 8-2, 8-5, 9-2

NEPA, i, 1, 2, 7, 1-1, 1-3, 1-5, 2-1, 7-1, 9-2, 10-5
New England Clean Power Link, 3, i, 1, 1-1, 3-21, 8-1, 8-2, 8-3, 8-4, 8-5, 8-6, 8-7, 8-9, 9-2, 9-3
New York, 15, 2-7, 2-18, 2-21, 3-1, 3-3, 3-5, 3-7, 3-10, 3-22, 3-24, 3-26, 3-27, 3-33, 3-34, 3-47, 3-65, 3-80, 3-81, 5-1, 5-2, 5-21, 5-23, 5-28, 5-64, 6-1, 6-2, 6-4, 6-5, 6-6, 6-8, 8-2, 8-4, 8-5, 8-6, 8-10, 9-3
No Action Alternative, i, 6, 16, 17, 1-2, 1-8, 2-1, 2-23, 4-1, 4-2
NOI, 2, 1-3, 9-3, 10-5
Noise, 20, 23, 1-8, 2-26, 2-29, 3-2, 3-33, 3-34, 3-35, 3-81, 3-82, 5-11, 5-18, 5-19, 5-30, 5-31, 5-32, 5-33, 5-38, 5-46, 5-49, 5-51, 5-63, 5-65, 5-66, 5-67, 5-68, 5-72, 6-9, 8-2, 8-4, 8-5, 8-6, 8-8, 9-2
Non-Native Invasive Species, 3-56, 8-1

O

Objectives, 1-2, 6-12
Operation and Maintenance, 17, 2-23, 9-3
Otter Creek, 3-5, 3-15, 3-22, 3-47, 3-48, 3-49, 3-54, 3-65, 3-66, 5-42
Overland Segment, 5, 13, 17, 19, 22, 1-4, 2-19, 2-20, 2-23, 2-25, 2-28, 3-2, 3-45, 3-46, 3-47, 3-48, 3-49, 3-51, 3-53, 3-54, 3-55, 3-56, 3-57, 3-58, 3-59, 3-60, 3-61, 3-62, 3-63, 3-64, 3-67, 3-68, 3-69, 3-70, 3-75, 3-79, 3-80, 3-81, 3-82, 3-83, 3-84, 3-85, 3-86, 3-87, 5-19, 5-20, 5-34, 5-38, 5-39, 5-41, 5-42, 5-43, 5-44, 5-45, 5-46, 5-47, 5-48, 5-49, 5-50, 5-51, 5-52, 5-56, 5-57, 5-58, 5-59, 5-60, 5-61, 5-62, 5-63, 5-64, 5-65, 5-66, 5-69, 5-70, 5-71, 5-72, 6-3, 6-8, 6-9, 10-5
Ozone, 3-37, 3-38, 9-3, 10-5

P

Particulate Matter, 3-40, 9-3, 10-5
Plattsburgh, 3-3
Pollutant, 3-6, 3-38, 5-34, 9-3
Pollutants, 3-39, 9-2, 10-1
Pollution, 8-4, 8-10
Port Kent, 3-3
Preferred Alternative, i, 7, 1-2, 2-1
Project, 3, i, vi, 1, 2, 3, 5, 6, 7, 8, 9, 10, 11, 14, 15, 16, 17, 18, 19, 21, 22, 23, 1-1, 1-2, 1-3, 1-4, 1-5, 1-6, 1-7, 1-8, 2-1, 2-3, 2-5, 2-7, 2-8, 2-9, 2-11, 2-12, 2-15, 2-16, 2-18, 2-19, 2-20, 2-21, 2-22, 2-23, 2-24, 2-25, 2-27, 2-28, 2-29, 2-32, 3-1, 3-2, 3-3, 3-5, 3-7, 3-10, 3-11, 3-12, 3-13, 3-15, 3-16, 3-17, 3-19, 3-20, 3-21, 3-22, 3-23, 3-24, 3-26, 3-27, 3-31, 3-33, 3-34, 3-35, 3-36, 3-39, 3-40, 3-42, 3-43, 3-45, 3-46, 3-47, 3-48, 3-49, 3-53, 3-55, 3-57, 3-58, 3-59, 3-61, 3-62, 3-63, 3-64, 3-65, 3-66, 3-67, 3-68, 3-69, 3-70, 3-77, 3-79, 3-80, 3-81, 3-82, 3-83, 3-84, 4-1, 4-2, 5-1, 5-3, 5-4, 5-7, 5-8, 5-9, 5-14, 5-16, 5-17, 5-18, 5-19, 5-20, 5-21, 5-22, 5-23, 5-24, 5-25, 5-26, 5-27, 5-28, 5-29, 5-30, 5-31, 5-33, 5-34, 5-35, 5-36, 5-37, 5-38, 5-39, 5-40, 5-41, 5-42, 5-44, 5-46, 5-47, 5-48, 5-49, 5-50, 5-51, 5-52, 5-53, 5-54, 5-55, 5-56, 5-57, 5-58, 5-59, 5-60, 5-61, 5-62, 5-63, 5-64, 5-65, 5-66, 5-68, 5-70, 5-71, 5-72, 6-1, 6-2, 6-3, 6-4, 6-5, 6-6, 6-7, 6-8, 6-9, 6-10, 6-11, 6-12, 7-2, 8-1, 8-2, 8-3, 8-4, 8-5, 8-6, 8-7, 8-8, 8-10, 9-1, 9-3, 10-3, 10-5
Project Area, 5-34
Project Route, vi, 8, 1-8, 2-8, 10-5
Proposed Action, 2, 6, 7, 1-2, 1-3, 1-8, 2-1, 4-1
Proposed Project, 3-77, 5-35, 5-70

R

Record of Decision, 6, 1-7, 9-3
Recreation, 23, 1-8, 2-29, 3-2, 3-26, 3-79, 5-27, 5-63, 6-8, 7-2, 8-3
  Resources, 7-2
References, 5-34, 8-1
Region of Influence, 3-1, 3-2, 9-3, 10-6
Regional System Plan, 15, 3-24, 4-1, 5-26, 5-62, 8-3
Restoration, 5-38, 5-40, 5-53
Riparian, 10-6
River, 1-6, 3-7, 3-22, 3-23, 3-47, 3-48, 3-49, 3-54, 3-65, 3-66, 3-75, 5-32, 5-48, 8-2
Riverine, 3-54, 3-57, 5-48
ROD, 6, 1-7, 9-3
ROI, 3-1, 3-3, 3-7, 3-13, 3-15, 3-16, 3-17, 3-18, 3-19, 3-20, 3-21, 3-24, 3-25, 3-26, 3-31, 3-34, 3-35, 3-39, 3-40, 3-41, 3-42, 3-43, 3-44, 3-45, 3-46, 3-47, 3-48, 3-49, 3-53, 3-54, 3-55, 3-56, 3-57, 3-58, 3-59, 3-60, 3-61, 3-62, 3-64, 3-69, 3-70, 3-75, 3-79, 3-80, 3-81, 3-82, 3-83, 3-84, 3-85, 3-86, 5-1, 5-19, 5-20, 5-24, 5-25, 5-26, 5-38, 5-39, 5-47, 5-49,

5-50, 5-52, 5-60, 5-61, 5-62, 5-63, 5-64, 5-71, 5-72, 6-1, 6-3, 6-4, 6-7, 9-3, 10-6
Runoff, 3-61

S

Scoping, vi, 5, 1-4, 1-8, 10-6
Sediment, 3-6, 5-11, 5-21, 5-26, 5-33, 5-44, 6-6, 6-8, 8-4, 9-1
Sensitive Species, 19, 20, 1-8, 2-25, 2-26, 3-2, 3-13, 3-16, 3-53, 3-57, 5-14, 5-19, 5-45, 5-49, 6-7, 7-2
Shear Plow, 10-6
Shoreham, 3-3, 3-26, 5-27
Soil, 22, 1-8, 2-20, 2-28, 3-2, 3-19, 3-20, 3-35, 3-61, 3-62, 3-63, 5-20, 5-25, 5-47, 5-51, 5-57, 5-58, 5-61, 5-69, 6-7, 7-2, 8-3, 8-7
South Carolina, 3-43, 3-44, 3-86
Species, 2, 19, 20, 1-6, 1-8, 2-25, 2-26, 3-2, 3-11, 3-12, 3-13, 3-14, 3-15, 3-16, 3-17, 3-18, 3-48, 3-49, 3-53, 3-54, 3-55, 3-56, 3-57, 3-58, 3-59, 3-60, 3-61, 5-8, 5-12, 5-14, 5-15, 5-16, 5-18, 5-19, 5-44, 5-45, 5-46, 5-49, 5-50, 5-51, 5-54, 5-55, 5-56, 6-6, 6-7, 6-11, 7-2, 8-1, 8-5, 8-7, 8-8, 8-9, 8-10, 8-11, 9-1, 10-2, 10-3, 10-4, 10-6, 10-7
Storm Water, 3-25
Stormwater, 1-6, 3-7, 3-25, 3-75, 5-25, 5-26, 5-42, 5-43, 5-61, 5-62, 8-7, 8-9
Stream, 1-6, 3-51, 8-7
Sturgeon, 8-1, 8-2

T

Table, vi, vii, 1-3, 1-4, 1-8, 2-23, 3-2, 3-8, 3-11, 3-14, 3-17, 3-24, 3-33, 3-34, 3-38, 3-40, 3-41, 3-42, 3-43, 3-44, 3-49, 3-55, 3-56, 3-57, 3-58, 3-59, 3-67, 3-68, 3-69, 3-83, 3-84, 3-85, 3-86, 3-87, 4-3, 5-6, 5-32, 5-48, 5-52, 5-67, 5-70, 6-4, 8-7, 8-9
TDI-NE, 2, i, 1, 2, 5, 6, 7, 8, 9, 10, 11, 12, 13, 14, 15, 1-1, 1-2, 1-3, 1-4, 1-5, 2-1, 2-3, 2-7, 2-8, 2-11, 2-12, 2-14, 2-15, 2-17, 2-18, 2-19, 2-20, 2-21, 2-22, 3-1, 3-3, 3-5, 3-15, 3-16, 3-17, 3-18, 3-19, 3-26, 3-35, 3-45, 3-47, 3-48, 3-55, 3-57, 3-58, 3-59, 3-60, 3-61, 3-67, 3-83, 5-1, 5-2, 5-3, 5-4, 5-7, 5-19, 5-20, 5-22, 5-24, 5-25, 5-26, 5-27, 5-30, 5-31, 5-33, 5-34, 5-35, 5-40, 5-41, 5-42, 5-43, 5-44, 5-46, 5-47, 5-49, 5-51, 5-53, 5-55, 5-57, 5-59, 5-61, 5-62, 5-66, 5-67, 5-68, 5-69, 5-70, 5-72, 6-2, 6-8, 6-10, 6-11, 8-2, 8-3, 8-6, 8-7, 8-9, 9-3, 10-3
Terrestrial Habitats and Species, 20, 2-26, 3-2, 3-15, 3-55, 5-18, 5-46, 6-7
Terrestrial Protected and Sensitive Species, 20, 1-8, 2-26, 3-2, 3-16, 3-57, 5-19, 5-49, 6-7
Terrestrial Wetlands, 3-18, 3-61, 5-20, 5-52
Threatened, 3-17, 3-55, 3-58, 3-59, 3-61, 8-7, 8-8, 8-9, 8-11, 10-3, 10-7
Threatened and Endangered, 3-55, 3-61
Threatened Species, 8-8
Topography, 3-19, 3-62, 5-20, 5-22, 5-57, 5-58
Trail, 3-79, 5-63, 8-3, 8-10
Transmission Cable, 8, 9, 11, 13, 2-8, 2-9, 2-10, 2-12, 2-13, 2-15, 2-16, 2-19, 10-7
Transmission Line, i, 1, 1-1, 8-3, 8-8, 9-3, 10-7
Transportation, 18, 1-6, 1-8, 2-24, 3-1, 3-2, 3-3, 3-46, 5-1, 5-37, 5-39, 5-40, 5-46, 6-3, 6-5, 7-2, 8-4, 8-7, 8-9, 9-2, 9-3, 9-4

U

U.S. Department of Agriculture, 2-20, 8-7, 8-9, 9-4
U.S. Department of Energy, 3, i, 1, 2, 5, 6, 7, 15, 22, 1-1, 1-2, 1-3, 1-4, 1-5, 1-6, 1-7, 1-8, 2-1, 2-3, 2-7, 2-21, 2-22, 2-28, 3-1, 3-5, 3-14, 3-21, 3-22, 3-27, 3-32, 3-55, 3-63, 3-80, 3-81, 4-1, 4-2, 5-2, 5-9, 5-11, 5-21, 5-23, 5-30, 5-31, 5-32, 5-66, 5-67, 5-71, 6-1, 6-9, 7-1, 8-6, 8-7, 8-8, 9-1
United States, i, 1, 2, 7, 8, 9, 1-1, 1-2, 1-3, 1-5, 2-1, 2-8, 2-12, 2-19, 3-5, 3-7, 3-17, 3-18, 3-33, 3-41, 3-42, 3-81, 3-84, 3-85, 4-1, 5-4, 5-24, 5-30, 5-36, 5-57, 5-58, 6-1, 6-8, 8-9
USACE, i, 2, 1-5, 1-6, 3-61, 5-2, 5-4, 5-30, 5-55, 8-6, 8-7, 9-4
USDA, 2-20, 3-20, 8-7, 9-4

V

Vegetation, 14, 3-12, 3-49, 5-9, 5-13, 5-42, 5-44, 5-45, 5-49, 5-51, 5-52, 5-53, 5-56, 5-57, 5-58, 5-60, 5-67, 5-70, 8-7, 9-3, 10-6
Vermont, 2, i, vi, 1, 2, 5, 6, 7, 8, 9, 10, 13, 17, 18, 19, 25, 1-1, 1-2, 1-3, 1-4, 1-6, 1-7, 1-8, 2-1, 2-3, 2-7, 2-8, 2-11, 2-12, 2-15, 2-20, 2-23, 2-24, 2-25, 2-31, 3-1, 3-2, 3-3, 3-5, 3-6, 3-7, 3-10, 3-11, 3-13, 3-15, 3-16, 3-18, 3-

19, 3-20, 3-21, 3-24, 3-25, 3-26, 3-27, 3-32, 3-33, 3-34, 3-35, 3-36, 3-38, 3-39, 3-40, 3-41, 3-42, 3-43, 3-44, 3-45, 3-46, 3-47, 3-48, 3-49, 3-53, 3-54, 3-55, 3-57, 3-58, 3-60, 3-61, 3-63, 3-64, 3-65, 3-66, 3-67, 3-68, 3-70, 3-75, 3-79, 3-80, 3-81, 3-82, 3-83, 3-84, 3-85, 3-86, 3-87, 4-1, 4-2, 4-3, 5-2, 5-7, 5-8, 5-22, 5-24, 5-27, 5-28, 5-30, 5-32, 5-33, 5-35, 5-36, 5-37, 5-38, 5-40, 5-42, 5-46, 5-47, 5-50, 5-55, 5-59, 5-63, 5-64, 5-68, 5-70, 5-71, 6-1, 6-2, 6-3, 6-4, 6-6, 6-8, 6-9, 7-1, 7-2, 8-2, 8-3, 8-4, 8-5, 8-6, 8-8, 8-9, 8-10, 8-11, 9-1, 9-2, 9-4, 10-4, 10-5

W

Water, 18, 1-5, 1-6, 1-8, 2-17, 2-24, 3-2, 3-5, 3-6, 3-7, 3-8, 3-10, 3-11, 3-25, 3-46, 3-48, 3-49, 3-61, 3-70, 5-4, 5-5, 5-6, 5-15, 5-24, 5-26, 5-31, 5-32, 5-42, 5-60, 5-62, 6-5, 7-2, 8-2, 8-3, 8-4, 8-6, 8-9, 8-10, 9-1, 9-4, 10-3, 10-4, 10-6, 10-7
  Quality, 18, 1-6, 2-24, 3-10, 3-11, 5-4, 5-6, 5-42, 8-2, 8-3, 8-10, 9-4
  Resources, 1-8, 3-2, 3-5, 3-48, 5-4, 5-42, 6-5, 7-2
  Supply, 3-25, 3-70, 5-24, 5-26, 5-60, 5-62, 8-10
  Surface, 3-7, 5-4, 5-42, 10-6
Watershed, 3-6, 8-2, 8-9, 10-7
Wetlands, 21, 1-8, 2-27, 3-2, 3-18, 3-61, 3-62, 5-20, 5-52, 5-53, 6-11, 7-2, 10-7
Wildlife, 1-6, 3-13, 3-16, 3-17, 3-18, 3-57, 3-59, 3-60, 3-61, 3-79, 5-47, 5-48, 5-54, 7-1, 7-2, 7-3, 8-1, 8-2, 8-4, 8-7, 8-8, 8-9, 8-11, 9-2, 9-4, 10-2, 10-7
Wildlife Habitat, 3-61, 8-1, 8-7, 8-9
Winooski River, 3-54