INFORMATION ONLY

P2010-3583

CCP-AK-LANL-006

Central Characterization Program
Acceptable Knowledge Summary Report
For

LOS ALAMOS NATIONAL LABORATORY
TA-55 MIXED TRANSURANIC WASTE

WASTE STREAMS:
LA-MHD01.001
LA-CIN01.001
LA-MIN02-V.001
LA-MIN04-S.001

Revision 13

February 10, 2014

Mike Ramirez
Printed Name
APPROVED FOR USE

RECORD OF REVISION

Revision Number	Date Approved	Description of Revision
0	06/10/2004	Initial issue.
1	07/08/2004	Sections 2.0 and 5.5 have been modified to identify the TRUPACT-II Content Codes (TRUCONs) that will be confirmed by Real-Time Radiography (RTR) and/or Visual Examination (VE) and to clarify that other TRUCONs may also be suitable for individual containers in this waste stream pending further evaluation on a container basis.
2	04/14/2005	Calculations for payload management have been added to Section 4.3.6. The waste stream description has been modified to clarify the waste does not contain greater than 1% Waste Material Type IV.1. Various editorial corrections have been made throughout the report.
3	04/13/2006	Sections 4.0 through 5.0, Section 9.0, Attachment 2, and Attachment 4 have been modified to distinguish between inactive and active waste generating processes, to identify new active waste generating processes, to expand existing process descriptions, and to include additional chemical and material inputs. These updates were based on site personnel interviews and reviews of acceptable knowledge documents performed during the generation of the detailed Pu-239 Operations process flow diagrams.
4	07/31/2006	Revised to incorporate plutonium (Pu)-238 debris waste stream containers (LA-MHD02.001) from CCP-AK-LANL-007, *Los Alamos National Laboratory Pu-238 Contaminated Mixed Heterogeneous Debris Waste Stream LA-MHD02.001* into waste stream LA-MHD01.001 generated by operations in the Technical Area (TA)-55 Plutonium Facility Building (PF-4).
5	11/16/2006	Revised to implement the Waste Isolation Pilot Plant Hazardous Waste Facility Permit requirements resulting from the Section 311/Remote-Handled (RH) Permit Modification Request (PMR) by including the Waste Material Parameter Assessment for waste stream LA-MHD01.001.

RECORD OF REVISION (Continued)

Revision Number	Date Approved	Description of Revision
6	03/27/2007	Revised to include new cemented inorganic homogeneous solid waste stream number LA-CIN01.001 generated by the cement fixation process in TA-55 Plutonium Facility Building (PF-4). This new waste stream is explained in detail in Section 6.0.
7	11/30/2007	Revised to include additional containers to waste stream LA-MHD01.001 and to update the affected sections (types and quantities of Transuranic (TRU) waste generated, waste material parameters, estimated radionuclide distributions); to expand descriptions of waste generating processes that produced ash, hydroxide cakes, salts, and contaminated absorbent; to address internal packaging of waste containers; to address repackaging operations; and to incorporate miscellaneous editorial changes. This revision also includes new absorbed liquid homogeneous solid waste stream number LA-MIN02-V.001. This new waste stream is explained in detail in Section 7.0.
8	03/12/2008	Revised to remove originally generated homogeneous containers from waste stream LA-MHD01.001 added during Revision 7; to address a change in packaging for waste stream LA-CIN01.001; to address repackaging and Decontamination and Decommissioning operations; and to incorporate miscellaneous editorial changes.
9	01/27/2009	Revised to include additional containers to waste stream LA-MHD01.001 that were originally characterized as homogeneous by Los Alamos National Laboratory and to update the affected sections (types and quantities of transuranic waste generated, waste material parameters, estimated radionuclide distributions); to properly identify chemicals in Table 9, Chemical Identification and Use Summary, as ignitable, corrosive, and/or reactive in their pure form; and to incorporate miscellaneous editorial changes. This revision also includes new salt homogeneous solid waste stream number LA-MIN04-S.001. This new waste stream is explained in detail in Section 8.0.

RECORD OF REVISION (Continued)

Revision Number	Date Approved	Description of Revision
10	05/04/2010	Revised to include various changes identified during the 2009 recertification audit; to expand the spent nuclear fuel and high-level waste assessment; to address facility and equipment maintenance operations; to address below-grade retrieval operations; to add below-grade containers to waste streams LA-MHD01.001 and LA-CIN01.001 and to update the affected sections (e.g., types and quantities of Transuranic [TRU] waste generated, estimated radionuclide distributions); to add containers to waste streams LA-MIN02-V.001 and LA-MIN04-S.001 and to update the affected sections (e.g., types and quantities of TRU waste generated, estimated radionuclide distributions); and to include miscellaneous changes to Sections 1.0, 2.0, 3.0, 4.0, 5.0, 7.0, 8.0, 10.0, 11.0, and 12.0.
11	09/23/2011	Revised to incorporate changes required by the Waste Isolation Pilot Plant (WIPP) Permit renewal dated November 30, 2010; to include changes identified during the 2011 recertification audit, to update the Annual Transuranic Waste Inventory Report Identification numbers; to expand the waste stream correlation section; to clarify the waste packaging configurations; and to delete the Supplemental Waste Stream Information section. This revision also includes miscellaneous changes made throughout the report.
12	12/12/2012	Revised to expand/modify Sections 1.0, 2.0, and 3.0; to add TRUCON code SQ133 to waste stream LA-MHD01.001; to expand the waste stream description for LA-MIN02-V.001 and to add TRUCON code LA226; to add new TA-54 repackaging facility description; to add containers to waste streams LA-MHD01.001, LA-CIN01.001, LA-MIN02-V.001, and LA-MIN04-S.001 and to update the affected sections (e.g., types and quantities of TRU waste generated, estimated radionuclide distributions); to expand the ignitability, corrosivity, and reactivity sections; and to clarify the waste packaging configurations. This revision also includes miscellaneous changes made throughout.

RECORD OF REVISION (Continued)

Revision Number	Date Approved	Description of Revision
13	02/10/2014	Revised to clarify the TRUPACT-II Content Codes and the waste stream descriptions for all four waste streams, to update the waste stream LA-MHD01.001 *Annual Transuranic Waste Inventory Report* numbers, to update the Description of Waste Generating Process section, to update the waste stream LA-MHD01.001 future projected waste generation volume, to discuss the use and characterization of hydrofluoric acid, to incorporate changes identified in the 2013 recertification audit, to incorporate changes identified in the 2013 U.S. Environmental Protection Agency (EPA) Continued Compliance audit, and to incorporate various changes.

TABLE OF CONTENTS

1.0 EXECUTIVE SUMMARY 16

2.0 WASTE STREAM IDENTIFICATION SUMMARY 18
2.1 Waste Stream LA-MHD01.001 (Heterogeneous Debris) 19
2.2 Waste Stream LA-CIN01.001 (Cemented TRU Waste) 22
2.3 Waste Stream LA-MIN02-V.001 (Absorbed Waste) 24
2.4 Waste Stream LA-MIN04-S.001 (Salt Waste) 26

3.0 ACCEPTABLE KNOWLEDGE DATA AND INFORMATION 28

4.0 REQUIRED PROGRAM INFORMATION 29
4.1 Facility Location 29
4.2 LANL Operational History 29
4.2.1 LANL Site Mission 30
4.2.2 TA-55 PF-4 Mission 30
4.2.3 Defense Waste Assessment 31
4.2.4 Spent Nuclear Fuel and High-Level Waste Assessment 33
4.3 TRU Waste Management 34
4.3.1 TRU Waste Identification and Categorization 34
4.3.2 Historical TRU Waste Management Practices 36
4.3.3 Present-Day TRU Waste Management Practices 37
4.3.4 TRU Waste Generator Documentation Requirements 38
4.3.5 LANL Treatment, Storage and Disposal Facilities for TRU Waste 41
4.3.6 Types and Quantity of TRU Waste Generated 42
4.3.7 Correlation of Waste Streams Generated from the Same Building and Process 42
4.4 Description of Waste Generating Process 46
4.4.1 Overview 46
4.4.2 Nitrate Operations 48
4.4.3 Miscellaneous Operations 51
4.4.4 Special Processing Operations 56
4.4.5 Metal Operations 57
4.4.6 Pyrochemical and Chloride Operations 62
4.4.7 Pu-238 Operations 66
4.4.8 Facility and Equipment Maintenance Operations 73
4.4.9 Decontamination and Decommissioning (D&D) Operations 74
4.4.10 Waste Repackaging and Prohibited Item Disposition 75
4.4.11 Below-Grade Retrieval Project 76
4.5 Waste Certification Procedures 77

5.0 REQUIRED WASTE STREAM INFORMATION: LA-MHD01.001 78
5.1 Area and Building of Generation 78
5.2 Waste Stream Volume and Period of Generation 78
5.3 Waste Generating Activities 79

5.4 Type of Wastes Generated 79
5.4.1 Material Input Related to Physical Form 80
5.4.1.1 Waste Matrix Code 81
5.4.1.2 Waste Material Parameters 81
5.4.2 Radiological Characterization 82
5.4.2.1 Pu-238, Pu-239, Pu-240, Pu-241, and Pu-242 82
5.4.2.2 U-233, U-234, U-235, and U-238 83
5.4.2.3 Am-241 84
5.4.2.4 Other Radionuclides Present Due to Decay 85
5.4.2.5 Cesium (Cs)-137 and Strontium (Sr)-90 85
5.4.2.6 Other Radionuclides Introduced as Feed Material 86
5.4.2.7 Estimated Predominant Isotopes and 95 percent Total Activity. 88
5.4.2.8 Use of Radionuclide Isotopic Ratios 88
5.4.3 Chemical Content Identification – Hazardous Constituents 90
5.4.3.1 Chemical Inputs 95
5.4.3.2 F-, K-, P-, and U-Listed Constituents 105
5.4.3.3 Toxicity Characteristic Constituents 107
5.4.3.4 Ignitables, Corrosives, and Reactives 107
5.4.3.5 Polychlorinated Biphenyls (PCBs) 109
5.4.4 Prohibited Items 110
5.4.4.1 Compressed Gases, Liquids, Nonradionuclide Pyrophorics, Sealed Containers >Four Liters In Volume, >1 Percent Radionuclide Pyrophorics, and >200 mrem/hr Waste 110
5.4.4.2 Remediation of Prohibited Items 111
5.5 Waste Packaging 112

6.0 REQUIRED WASTE STREAM INFORMATION: LA-CIN01.001 115
6.1 Area and Building of Generation 115
6.2 Waste Stream Volume and Period of Generation 115
6.3 Waste Generating Activities 116
6.4 Type of Wastes Generated 116
6.4.1 Material Input Related to Physical Form 116
6.4.1.1 Waste Matrix Code 117
6.4.1.2 Waste Material Parameters 117
6.4.2 Radiological Characterization 118
6.4.2.1 Pu-238, Pu-239, Pu-240, Pu-241, and Pu-242 118
6.4.2.2 U-233, U-234, U-235, and U-238 119
6.4.2.3 Am-241 119
6.4.2.4 Other Radionuclides Present Due to Decay 120
6.4.2.5 Cs-137 and Sr-90 120
6.4.2.6 Other Radionuclides Introduced as Feed Material 120
6.4.2.7 Estimated Predominant Isotopes and 95 percent Total Activity121
6.4.2.8 Use of Radionuclide Isotopic Ratios 121
6.4.3 Chemical Content Identification – Hazardous Constituents 123
6.4.3.1 Chemical Inputs 123

6.4.3.2 F-, K-, P-, and U-Listed Constituents 124
6.4.3.3 Toxicity Characteristic Constituents 125
6.4.3.4 Ignitables, Corrosives, and Reactives 125
6.4.3.5 Polychlorinated Biphenyls (PCBs) 126
6.4.3.6 Flammable Volatile Organic Compounds 127
6.4.4 Prohibited Items 127
6.4.4.1 Compressed Gases, Liquids, Nonradionuclide Pyrophorics, Sealed Containers > Four Liters In Volume, >1 Percent Radionuclide Pyrophorics, and >200 mrem/hr Waste 127
6.4.4.2 Remediation Of Prohibited Items 128
6.5 Waste Packaging 128

7.0 REQUIRED WASTE STREAM INFORMATION: LA-MIN02-V.001 131
7.1 Area and Building of Generation 131
7.2 Waste Stream Volume and Period of Generation 131
7.3 Waste Generating Activities 131
7.4 Type of Wastes Generated 132
7.4.1 Material Input Related to Physical Form 132
7.4.1.1 Waste Matrix Code 133
7.4.1.2 Waste Material Parameters 133
7.4.2 Radiological Characterization 134
7.4.2.1 Pu-238, Pu-239, Pu-240, Pu-241, and Pu-242 134
7.4.2.2 U-233, U-234, U-235, and U-238 135
7.4.2.3 Am-241 135
7.4.2.4 Other Radionuclides Present Due to Decay 136
7.4.2.5 Cs-137 and Sr-90 136
7.4.2.6 Other Radionuclides Introduced as Feed Material 136
7.4.2.7 Estimated Predominant Isotopes and 95 percent Total Activity 137
7.4.2.8 Use of Radionuclide Isotopic Ratios 137
7.4.3 Chemical Content Identification – Hazardous Constituents 138
7.4.3.1 Chemical Inputs 139
7.4.3.2 F-, K-, P-, and U-Listed Constituents 140
7.4.3.3 Toxicity Characteristic Constituents 141
7.4.3.4 Ignitables, Corrosives, and Reactives 141
7.4.3.5 Polychlorinated Biphenyls (PCBs) 142
7.4.4 Prohibited Items 143
7.4.4.1 Compressed Gases, Liquids, Nonradionuclide Pyrophorics, Sealed Containers > Four Liters In Volume, >1 Percent Radionuclide Pyrophorics, and >200 mrem/hr Waste 143
7.4.4.2 Remediation Of Prohibited Items 143
7.5 Waste Packaging 144

8.0 REQUIRED WASTE STREAM INFORMATION: LA-MIN04-S.001 146
8.1 Area and Building of Generation 146
8.2 Waste Stream Volume and Period of Generation 146

8.3 Waste Generating Activities 146
8.4 Type of Wastes Generated 147
8.4.1 Material Input Related to Physical Form 147
8.4.1.1 Waste Matrix Code 148
8.4.1.2 Waste Material Parameters 148
8.4.2 Radiological Characterization 149
8.4.2.1 Pu-238, Pu-239, Pu-240, Pu-241, and Pu-242 149
8.4.2.2 U-233, U-234, U-235, and U-238 150
8.4.2.3 Am-241 150
8.4.2.4 Other Radionuclides Present Due to Decay 151
8.4.2.5 Cs-137 and Sr-90 151
8.4.2.6 Other Radionuclides Introduced as Feed Material 151
8.4.2.7 Estimated Predominant Isotopes and 95 percent Total Activity 152
8.4.2.8 Use of Radionuclide Isotopic Ratios 152
8.4.3 Chemical Content Identification – Hazardous Constituents 153
8.4.3.1 Chemical Inputs 154
8.4.3.2 F-, K-, P-, and U-Listed Constituents 154
8.4.3.3 Toxicity Characteristic Constituents 156
8.4.3.4 Ignitables, Corrosives, and Reactives 156
8.4.3.5 Polychlorinated Biphenyls (PCBs) 157
8.4.4 Prohibited Items 157
8.4.4.1 Compressed Gases, Liquids, Nonradionuclide Pyrophorics, Sealed Containers Greater Than Four Liters In Volume, >1 Percent Radionuclide Pyrophorics, and >200 mrem/hr Waste 157
8.4.4.2 Remediation of Prohibited Items 158
8.5 Waste Packaging 158

9.0 CONTAINER-SPECIFIC INFORMATION 160

10.0 REFERENCES 161

11.0 AK SOURCE DOCUMENTS 163

LIST OF TABLES

Table 1. LA-MHD01.001 Approximate Waste Stream Volume 79
Table 2. Waste Material Parameter Estimates for LA-MHD01.001 82
Table 3. Average Isotopic Content of Plutonium Material Types and Enrichments 83
Table 4. Average Isotopic Content of Uranium Material Types and Enrichments 84
Table 5. Secondary Radionuclides in Plutonium Recovery TRU Waste..... 87
Table 6. Estimated Radionuclide Distribution in LA-MHD01.001 89
Table 7. Waste Stream LA-MHD01.001 Hazardous Waste Characterization Summary 91
Table 8. Feed Materials for TA-55 Operations 92
Table 9. Chemical Identification and Use Summary..... 96
Table 10. LA-CIN01.001 Approximate Waste Stream Volume..... 115
Table 11. Waste Stream LA-CIN01.001 Waste Material Parameter Estimates..... 118
Table 12. Estimated Radionuclide Distribution in LA-CIN01.001 122
Table 13. Waste Stream LA-CIN01.001 Hazardous Waste Characterization Summary 123
Table 14. LA-MIN02-V.001 Approximate Waste Stream Volume..... 131
Table 15. Waste Stream LA-MIN02-V.001 Waste Material Parameter Estimates..... 134
Table 16. Estimated Radionuclide Distribution in LA-MIN02-V.001 138
Table 17. Waste Stream LA-MIN02-V.001 Hazardous Waste Characterization Summary..... 139
Table 18. LA-MIN04-S.001 Approximate Waste Stream Volume..... 146
Table 19. Waste Stream LA-MIN04-S.001 Waste Material Parameter Estimates..... 149
Table 20. Estimated Radionuclide Distribution in LA-MIN04-S.001 153
Table 21. Waste Stream LA-MIN04-S.001 Hazardous Waste Characterization Summary154

LIST OF FIGURES

Figure 1. Location of LANL Site 177
Figure 2. Location of the PF-4 at TA-55 LANL Site 178
Figure 3. RSWD Code Descriptions Table 179
Figure 4. Item Description Codes (IDC) Table 180
Figure 5. TA-55 Process/Status Code Index Table 182
Figure 6. Example Generator Container Specific Documentation 191
Figure 7. Process Flow Diagram for Nitrate Operations (Legacy) 210
Figure 8. Process Flow Diagram for Nitrate Operations (Newly Generated) 211
Figure 9. Simplified Process Flow Diagram for Miscellaneous Operations (Legacy) 212
Figure 10. Simplified Process Flow Diagram for Miscellaneous Operations (Newly Generated) 213
Figure 11. Simplified Process Flow Diagram for Special Processing (Legacy) 214
Figure 12. Simplified Process Flow Diagram for Special Operations (Newly Generated) 215
Figure 13. Simplified Process Flow Diagram for Metal Operations (Legacy) 216
Figure 14. Simplified Process Flow Diagram for Metal Operations (Newly Generated) ...219
Figure 15. Simplified Process Flow Diagram for Pyrochemical Operations (Legacy).....220
Figure 16. Simplified Process Flow Diagram for Chloride Operations (Legacy).....221

LIST OF FIGURES (Continued)

Figure 17. Simplified Process Flow Diagram for Pyrochemical and Chloride Operations (Newly Generated) 222
Figure 18. Simplified Process Flow Diagram for Pu-238 Operations (Legacy).....223
Figure 19. Simplified Process Flow Diagram for Pu-238 Operations (Newly Generated) 226
Figure 20. Waste Repackaging and Prohibited Item Disposition Flow Diagram.....227
Figure 21. Below-Grade Drum Retrieval Flow Diagram 228
Figure 22. Below-Grade Crate Retrieval Flow Diagram 229

LIST OF ACRONYMS AND ABBREVIATIONS

AEC	U. S. Atomic Energy Commission
AK	Acceptable Knowledge
AKIS	Acceptable Knowledge Information Summary
ALARA	as low as reasonably achievable
ARIES	Advanced Recovery and Integrated Extraction System
ATLAS	Advanced Testing Line for Actinide Separations
ATWIR	*Annual Transuranic Waste Inventory Report*
BDR	Batch Data Report
$CaCl_2$	calcium chloride
CBFO	Carlsbad Field Office
CCP	Central Characterization Program
CFR	Code of Federal Regulations
CH	contact-handled
CH-TRAMPAC	*Contact-Handled Transuranic Authorized Methods for Payload Control*
CMB	corrugated metal box
CMPO	octylphenyl di-isobutyl carbamoylmethyl phosphine oxide
CMR	Chemistry and Metallurgy Research
C–N–O	carbon–nitrogen–oxygen
COM	combustible waste
CSMO	Central Scrap Management Office
CWSR	Certified Waste Storage Record
D&D	decontamination and decommissioning
DBBP	dibutyl butyl-phosphonate
DCHP	dicesium hexachloroplutonate
DHDCMP	dihexyl N, N-diethylcarbamoylmethyl phosphonate
DL	Discard Limit
DOE	U.S. Department of Energy
DOR	Direct Oxide Reduction
DOT	U.S. Department of Transportation
DVRS	Decontamination and Volume Reduction System
DWLS	Discardable Waste Log Sheet
EPA	U.S. Environmental Protection Agency
ER	electrorefining
FGE	fissile gram equivalent
FOOF	dioxygen difluoride
FRP	fiberglass reinforced plywood
FVOC	Flammable Volatile Organic Compound
GPHS	General Purpose Heat Source
HEPA	high-efficiency particulate air
HWFP	Hazardous Waste Facility Permit
HWN	Hazardous Waste Number
ICP	inductively coupled plasma

LIST OF ACRONYMS AND ABBREVIATIONS (Continued)

ID	item identification
IDC	item Description Code
KCl	potassium chloride
LANL	Los Alamos National Laboratory
LANS	Los Alamos National Security, LLC
LDR	Land Disposal Restrictions
LIG	Laboratory Implementation Guidance
LIR	Laboratory Implementation Requirements
LLW	low-level waste
LPR	Laboratory Performance Requirement
LWD	Legacy Waste Disposition
LWRHU	Light Weight Radioisotope Heater Unit
MASS	Material Accountability and Safeguards System
MCDOR	Multiple-Cycle Direct Oxide Reduction
MEGAS	Multiple Energy Gamma Assay System
MET	metal
$MgCl_2$	magnesium chloride
MgO	magnesium oxide
MIS	Material Identification and Surveillance
mm	millimeter
mrem/hr	millirem per hour
MSE	molten-salt extraction
MSDS	material safety data sheets
MT	Material Type
MWG	MilliWatt Generator
NaCl	sodium chloride
NASA	National Aeronautics and Space Administration
nCi/g	nanocuries per gram
NDA	Nondestructive Assay
ng/g	nanograms per gram
NMT	Nuclear Material Technology
NWPA	Nuclear Waste Policy Act
PCB	polychlorinated biphenyl
PF-4	Plutonium Facility Building
pg/g	picograms per gram
PLS	plastic
POC	pipe overpack container
PPE	personal protective equipment
ppm	parts per million
P/S	process/status
Pu-Be	plutonium-beryllium
$PuCl^3$	plutonium chloride
Pu-ICE	Plutonium Isentropic Compression Experiments

LIST OF ACRONYMS AND ABBREVIATIONS (Continued)

QA	Quality Assurance
R&D	Research and Development
RCRA	Resource Conservation and Recovery Act
RH	remote-handled
RLWTF	Radioactive Liquid Waste Treatment Facility
RSWD	Radioactive Solid Waste Disposal
RTG	Radioisotope Thermogenerators
RTR	real-time radiography
RUB	rubber
SME	Subject Matter Expert
SNM	special nuclear material
SNL	Sandia National Laboratories
SOP	standard operating procedure
SRF	Size Reduction Facility
SRL	Special Recovery Line
SRS	Savannah River Site
SWB	standard waste box
TA	Technical Area
TBP	tributyl phosphate
TDOP	ten drum overpack
TIG	tungsten inert gas
TOPO	trioctylphosphine oxide
TRU	transuranic
TRUCON	TRUPACT-II Content Code
TRUPACT-II	Transuranic Waste Transporter-Model II
TSCA	Toxic Substances Control Act
TSDFs	treatment, storage, and disposal facilities
TWCP	TRU Waste Certification Program
TWID	TRU Waste Interface Document
TWISP	Transuranic Waste Inspectable Storage Project
TWSR	TRU Waste Storage Record
UC	University of California
VE	visual examination
VOC	volatile organic compound
WAC	Waste Acceptance Criteria
WAP	Waste Analysis Plan
WCRR	Waste Characterization Reduction and Repackaging
WDS	Waste Data System
WEF	Waste Acceptance Criteria Exception Form
WIPP	Waste Isolation Pilot Plant
WIPP-WAC	*Waste Isolation Pilot Plant Waste Acceptance Criteria*
WIPP-WAP	*Waste Isolation Pilot Plant Hazardous Waste Facility Permit, Waste Analysis Plan*

LIST OF ACRONYMS AND ABBREVIATIONS (Continued)

WMP	Waste Material Parameter
WMS	Waste Management System
WODF	Waste Origination and Disposition Form
WPF	Waste Profile Form
WPRF	Waste Profile Request Form
wt %	weight percent
WWIS	WIPP Waste Information System
XBL	crucibles
XES	x-ray energy spectroscopy

1.0 EXECUTIVE SUMMARY

This Acceptable Knowledge (AK) Summary Report has been prepared for the Central Characterization Program (CCP) for contact-handled (CH) transuranic (TRU) waste generated at Technical Area (TA)-55 of the Los Alamos National Laboratory (LANL). This report was prepared in accordance with CCP-TP-005, *CCP Acceptable Knowledge Documentation* (Reference 8), to implement the AK requirements of the *Waste Isolation Pilot Plant Hazardous Waste Facility Permit, Waste Analysis Plan* (WIPP-WAP) (Reference 1) and the DOE/WIPP-02-3122, *Transuranic Waste Acceptance Criteria for the Waste Isolation Pilot Plant* (WIPP-WAC) (Reference 3).

The WIPP-WAP AK requirements are addressed in CCP-PO-001, *CCP Transuranic Waste Characterization Quality Assurance Project Plan* (Reference 7). The WIPP-WAC AK requirements are addressed in CCP-PO-002, *CCP Transuranic Waste Certification Plan* (Reference 16). Additionally, this report provides the AK information required by CCP-PO-003, *CCP Transuranic Authorized Methods for Payload Control (CCP CH-TRAMPAC)* (Reference 14).

The CCP is tasked with certification of CH TRU waste for transportation to and disposal at the Waste Isolation Pilot Plant (WIPP). CCP procedure CCP-TP-005 (Reference 8), describes how AK is compiled and confirmed by the CCP. The CCP is responsible for collection, review, and management of AK documentation in accordance with CCP-TP-005 and reviews and approves this AK Summary Report. CCP maintains responsibility for this AK Summary Report and all CCP-TP-005 generated forms and records as quality assurance (QA) records. In addition, CCP maintains a copy of the “historical source documents” as non-QA records.

This report presents the required characterization information for the mixed heterogeneous debris waste stream LA-MHD01.001, the mixed cement waste stream LA-CIN01.001, the mixed absorbent waste stream LA-MIN02-V.001, and the mixed salt waste stream LA-MIN04-S.001. As described in Section 4.3.7, AK information from the plutonium (Pu)-238 debris from waste stream LA-MHD02.001 previously described in CCP-AK-LANL-007, *Los Alamos National Laboratory Pu-238 Contaminated Mixed Heterogeneous Debris Waste Stream LA-MHD02.001* (Reference 20) has been combined into this report.

This report, along with referenced supporting documents, provides a defensible and auditable record of AK for the designated waste streams. The references and AK sources used to prepare this report are listed in Sections 10.0 and 11.0. The AK sources cited throughout this report are identified by alphanumeric designations correspond to a unique Source Document Tracking Number (i.e., C001, D001, DR001, M001, P001, and U001).

Due to the incorporation of waste stream LA-MHD02.001 containers into waste stream LA-MHD01.001, the AK sources collected for CCP-AK-LANL-007 have been combined with the AK sources collected originally for this report (References 20 and M312). Due to the collection and AK review of the same documents during the original preparation of this report and the CCP-AK-LANL-007 report, the sources identified in the text of this report can be redundant; referencing the same source of information collected for both reports, but assigned a different AK Source Document Tracking Number. However, redundant references from both reports were not included in all cases, if it was determined that the single reference was sufficient to support the applicable AK discussion.

This report includes information relating to the facility's history, configuration, equipment, process operations, and waste management practices. Information contained in this report was obtained from numerous sources, including facility safety basis documentation, database information, historical document archives, generator and storage facility waste records and documents, material safety data sheets (MSDS), and interviews with facility personnel.

This report and supporting references provide the mandatory waste program management and waste stream-specific AK information required by the WIPP-WAP (Reference 1).

2.0 WASTE STREAM IDENTIFICATION SUMMARY

Site Where TRU Waste Was Generated:

LANL
P.O. Box 1663
Los Alamos, New Mexico 87545

Facility Where TRU Waste Was Generated:

TA-55 Plutonium Facility Building 4 (PF-4)

LANL U.S. Environmental Protection Agency (EPA) Hazardous Waste Generator Identification Number:

NM0890010515

Facility Mission:

The primary mission of LANL has been nuclear weapons research and development (R&D). LANL's current central mission is to enhance global security by ensuring the safety and reliability of the U.S. nuclear stockpile, developing technologies to reduce threats from weapons of mass destruction, and solving problems related to energy, environment, infrastructure, health and national security concerns. This mission supports disciplines that enable LANL to contribute to defense, civilian, and industrial needs, including the research, design, development, and analysis of nuclear weapons components; support to research programs in the national interest; energy and environmental research; and environmental management.

The primary missions of the Plutonium Facility Building (PF-4) have included basic special nuclear material (SNM) research and technology development, processing a variety of plutonium-containing materials, and preparing reactor fuels, heat sources, and other SNM devices.

Since 1978, PF-4 has been located at TA-55. Operations commenced in 1979 for the extraction and recovery of plutonium from residues and scraps generated from operations at various LANL facilities and other U.S. Department of Energy (DOE) sites in the defense complex. The scrap and residues are processed to recover as much plutonium as economically feasible. The recovered plutonium is converted into pure plutonium feedstock. This recovery process, associated maintenance operations, limited manufacture of finished parts from purified plutonium, and plutonium research are the primary sources of TRU-contaminated debris, immobilized or solidified liquids and solids, and salts that comprise the waste in waste streams LA-MHD01.001, LA-CIN01.001, LA-MIN02-V.001, and LA-MIN04-S.001.

Waste Streams:

The waste streams delineated in this report and their associated Annual Transuranic Waste Inventory Report (ATWIR) numbers are presented in Sections 2.1, 2.2, 2.3, and 2.4.

2.1 Waste Stream LA-MHD01.001 (Heterogeneous Debris)

Summary Category Group:	S5000 – Debris Waste
Waste Matrix Code Group:	Heterogeneous Debris Waste
Waste Matrix Code:	S5400
TRUPACT-II Content Code (TRUCON):	LA125/225*

*Real-time radiography (RTR) and/or visual examination (VE) will confirm the primary TRUCON code LA125/225; however, TRUCON codes LA115/215, LA116/216, LA117/217, LA118/218, LA119/219, LA122/222, LA123/223, LA154, SQ133/233, and SQ154 may be used pending further evaluation by the Waste Certification Official of container-specific information.

Waste Stream ATWIR Identification Numbers (Reference 6)**:**	LA-TA-55-19, LA-TA-55-21, LA-TA-55-30, LA-TA-55-43, LA-NCD01, LA-MHD01.001, LA-LAMHD02238
Layers of Confinement:	Maximum of six layers**

**VE has identified one heterogeneous debris container with a total of seven layers of confinement. The configuration included five inner bags and two liner bags. This configuration is non-routine and considered to be an isolated incident (Reference DR007).

Waste Stream Description:

Waste stream LA-MHD01.001 consists of mixed heterogeneous debris waste generated in TA-55. The debris waste includes paper, rags, plastic, rubber, wood-based high-efficiency particulate air (HEPA) filters, other plastic-based and cellulose-based items (e.g., personal protective equipment [PPE]), noncombustible items (e.g., metal and glass), and lesser quantities of homogeneous solids (less than 50 percent by volume) contaminated with nuclear materials (e.g., americium oxide). Plastic-based waste includes (but may not be limited to): bottles, dry-box gloves (unleaded neoprene base), gloves including leaded gloves, ion-exchange resins, Plexiglas, polyethylene and

vinyl, polystyrene, polyvinyl chloride plastic, tape, Tygon tubing, and vials. Rubber- and Teflon-based waste includes rubber gloves, Teflon tape, gaskets, and stoppers. Cellulose-based waste includes (but may not be limited to): booties, cardboard, cotton gloves, coveralls, laboratory coats, paper, rags, wood, and similar materials. Noncombustible debris waste includes (but may not be limited to): bottles (e.g., glass and metal), cans (e.g., steel and brass), composite HEPA filters, crucibles, equipment (e.g., furnaces, foundry parts, machine tools and parts), fluorescent bulbs, glass, gloveboxes, glovebox windows, graphite, lead (e.g., shielding), metal pipes, miscellaneous labware, metal (e.g., beryllium), motors, pumps, slag, small tools, and ventilation ductwork. Homogeneous solid waste (less than 50 percent by volume) includes: hydroxide cake/filter materials, salts, and ash residues. Hydroxide cake/filter materials are composed of precipitated materials such as americium cadmium, calcium, chromium, iron, lead, magnesium, mercury, neptunium, plutonium potassium, silver, sodium hydroxide, thorium, and uranium. Salt waste can include varying mixtures of calcium chloride, cesium chloride, lithium chloride, magnesium chloride, potassium chloride, sodium chloride, zinc chloride, residual entrained calcium and zinc metal, and various plutonium and americium compounds. Ash residues originate from the thermal reduction of organic-based waste products that were contaminated with plutonium (e.g., plastics, rubber, wood, cellulosics, and oils) and may include incomplete combustion products such as small pieces of plastic and metal debris items. The waste stream also includes a small fraction liquids (e.g., waste oils and organics) and solids (e.g., nitrate salts) absorbed or mixed with absorbent materials which may include Ascarite II (sodium hydroxide coated silicate), diatomaceous earth (silica and quartz), kitty litter (clay), vermiculite (hydrated magnesium-aluminum-iron silicate), and/or zeolite (aluminosilicate mineral). Finally, some secondary waste generated during remediation/repackaging operations may be added to the waste containers including but not limited to: absorbent (e.g., Waste Lock 770 [sodium polyacrylate]), alkaline batteries, Fantastik bottles used during decontamination, miscellaneous hand tools, paper/plastic tags and labels, plastic/metal wire ties, PPE, plastic sheeting used for contamination control, rags and wipes (Kimwipes), and original packaging material (e.g., metal, plastic bags, plywood sheathing, rigid liner lids cut into pieces).

On a waste stream basis, the two predominant isotopes by mass for waste stream LA-MHD01.001 are Pu-239 and uranium (U)-238, and over 95 percent of the total activity is from Pu-238, Pu-239, and Pu-241. The radiological characterization information is presented in Section 5.4.2.

The waste stream contains Resource Conservation and Recovery Act (RCRA)-regulated constituents and is assigned the following EPA Hazardous Waste Numbers (HWNs): F001, F002, F005, D004, D005, D006, D007, D008, D009, D010, D011, D018, D019, D021, D022, D035, D038, D039, and D040. This waste stream may also include wastes containing or contaminated with polychlorinated biphenyls (PCBs). Refer to Section 5.4.3 for the waste stream chemical content evaluation.

Prohibited items are known to be present in the waste stream. Procedures allowed containers greater than four liters, sealed with tape, to be used for waste packaging until LANL WIPP-approved procedures were implemented. The presence of containerized (e.g., butane lighter, lighter fluid can, unpunctured aerosol cans, vials) and uncontainerized liquids have also been observed. Lead shielding is often used to increase handling safety, and thick shielding can obscure RTR observations. Additionally, based on interviews with site personnel performing VE and prohibited item disposition repackaging, internal cans (both shielded and unshielded) have been measured for dose rate during repackaging and found to contain waste with radiation levels exceeding 200 millirem per hour (mrem/hr). Waste packages containing prohibited items identified during characterization activities will be segregated then dispositioned appropriately and/or repackaged to remove the items prior to certification and shipment. Refer to Section 5.4.4 for detailed waste stream prohibited items information.

Waste packaging procedures for LANL waste streams have been modified several times since the beginning of recovery operations, and containers in this waste stream include a variety of configurations with up to six layers of confinement. RTR and/or VE will confirm TRUCON code LA125/225. LA125/225 describes the broadest type of materials and bounds all waste packages in this waste stream. However, TRUCON codes LA115/215, LA116/216, LA117/217, LA118/218, LA119/219, LA122/222, LA123/223, LA154, SQ133/233, and SQ154 have been identified as suitable TRUCON codes for individual containers in this waste stream. Refer to Section 5.5 for detailed packaging information.

Waste stream LA-MHD01.001 meets the definition of waste materials that have common physical form, that contain similar hazardous constituents, and that are generated from a single process or activity. This waste stream was generated during TA-55 R&D/fabrication and associated recovery, facility and equipment maintenance, decontamination and decommissioning (D&D), waste repackaging, and below-grade retrieval operations. Refer to Section 4.3.7 for detailed waste stream delineation information.

2.2 Waste Stream LA-CIN01.001 (Cemented TRU Waste)

Summary Category Group:	S3000 – Homogeneous Solids
Waste Matrix Code Group:	Solidified Inorganics
Waste Matrix Code:	S3150
TRUPACT-II Content Code:	LA126/226*

*RTR will confirm TRUCON code LA126/226; however, TRUCON code LA114/214 may be used pending evaluation by the Waste Certification Official of container-specific information.

Waste Stream ATWIR Identification Numbers (Reference 6)**:**	LA-TA-55-38, LA-CIN01.001
Layers of Confinement:	Maximum of six layers

Waste Stream Description:

Waste stream LA-CIN01.001 consists primarily of inorganic homogeneous solid waste (cemented TRU waste) generated in TA-55. The waste includes materials encased in Portland or gypsum cement such as aqueous and organic liquids from the six operational areas (e.g. nitrate operations), ash, calcium chloride salts, chloride solutions, evaporator bottoms and salts, filter aid, filter cakes (e.g., hydroxide cake), plutonium/uranium filings and fines, glovebox sweepings, graphite powder, HEPA filter media, leached ash residues, leached particulate solids (e.g., ash, sand, slag, and crucible parts), oxides (e.g., americium, metal, and uranium), miscellaneous oils (e.g., pump oil), silica solids, solvents, spent ion exchange resins, trioctyl phosphineoxide and iodine in kerosene, and uranium solutions. A small fraction of debris waste (less than 50 percent by volume) including plastic packaging, metal packaging, and PPE (e.g., leaded gloves) may also be present. Finally, some secondary waste generated during remediation/repackaging operations may be added to the waste containers, including but not limited to: absorbent (e.g., Waste Lock 770 [sodium polyacrylate]), alkaline batteries, Fantastik bottles used during decontamination, miscellaneous hand tools, paper/plastic tags and labels, plastic/metal wire ties, PPE, plastic sheeting used for contamination control, rags and wipes (Kimwipes), and original packaging material (e.g., metal, plastic bags, plywood sheathing, rigid liner lids cut into pieces).

On a waste stream basis, the two predominant isotopes by mass for waste stream LA-CIN01.001 are Pu-239 and U-238 and over 95 percent of the total activity is from americium (Am)-241, Pu-238, Pu-239, and Pu-241. The radiological characterization information is presented in Section 6.4.2.

The waste stream contains RCRA-regulated constituents and is assigned the following EPA HWNs: F001, F002, F005, D004, D005, D006, D007, D008, D009, D010, D011, D018, D019, D021, D022, D035, D038, D039, and D040. This waste stream does not include wastes containing or contaminated with PCBs. Refer to Section 6.4.3 for the waste stream chemical content evaluation.

Prohibited items are known to be present in the waste stream. The potential for prohibited quantities of liquid due to dewatering is anticipated. In addition, procedures allowed containers greater than four liters, sealed with tape, to be used for waste packaging until WIPP certification procedures were implemented. The presence of containerized (e.g., butane lighter, lighter fluid can, unpunctured aerosol can, vials) and uncontainerized liquids have also been observed in TA-55 waste. Lead shielding is often used to increase handling safety, and thick shielding can obscure RTR observations. Additionally, based on interviews with site personnel performing VE and prohibited item disposition repackaging, internal cans (both shielded and unshielded) have been measured for dose rate during repackaging and found to contain waste with radiation levels exceeding 200 mrem/hr. Waste packages containing prohibited items identified during characterization activities will be segregated then dispositioned appropriately and/or repackaged to remove the items prior to certification and shipment. Refer to Section 6.4.4 for detailed waste stream prohibited items information.

Waste packaging procedures for LANL waste streams have been modified several times since the beginning of recovery operations and containers in this waste stream include a variety of configurations with up to six layers of confinement. RTR will confirm TRUCON code LA126/226. However, TRUCON code LA114/214 has been identified as suitable for individual containers in this waste stream. Refer to Section 6.5 for detailed packaging information.

Waste stream LA-CIN01.001 meets the definition of waste materials that have common physical form, that contain similar hazardous constituents, and that are generated from a single process or activity. This waste stream was generated during TA-55 R&D/fabrication and associated recovery, facility and equipment maintenance, D&D, waste repackaging, and below-grade retrieval operations. Refer to Section 4.3.7 for detailed waste stream delineation information.

2.3 Waste Stream LA-MIN02-V.001 (Absorbed Waste)

Summary Category Group:	S3000 – Homogeneous Solids
Waste Matrix Code Group:	Solidified Inorganics
Waste Matrix Code:	S3110
TRUPACT-II Content Code:	LA112/212*

*RTR will confirm TRUCON code LA112/212; however, TRUCON codes LA126/226, SQ112/212, SQ113/213, and SQ129/229 may be used pending evaluation by the Waste Certification Official of container-specific information.

Waste Stream ATWIR Identification Number (Reference 6)**:**	LA-MIN02-V.001
Layers of Confinement:	Maximum of four layers

Waste Stream Description:

Waste stream LA-MIN02-V.001 consists primarily of inorganic particulate waste generated in TA-55. The waste is largely comprised of TRU waste such as liquids and solids absorbed or mixed with absorbent (e.g., Ascarite II, [sodium hydroxide coated silicate], diatomaceous earth [silica and quartz], kitty litter [clay], vermiculite [hydrated magnesium-aluminum-iron silicate], and/or zeolite [aluminosilicate mineral]). Examples of absorbed liquids include acids (e.g., hydrochloric acid, hydrofluoric acid, and nitric acid); carbon tetrachloride; ethylene glycol; kerosene; methanol; methylene chloride; silicone based liquids (e.g., silicone oil); tetrachloroethylene; tributyl phosphate; trichloroethylene; and various types of oils including hydraulic, vacuum pump, grinding, and lapping (mixture of mineral oil and lard). Solids mixed with absorbents are typically evaporator salts (i.e., nitrate salts). The waste is also expected to contain heavy metals such as cadmium, chromium, and lead. Liquids and solids not absorbed or mixed with absorbent are often cemented and disposed of separately in waste stream LA-CIN01.001. A small fraction of debris waste (less than 50 percent by volume) including plastic packaging, metal packaging, lead (e.g., shielding), PPE, and metal fines may also be present. Finally, some secondary waste generated during remediation/repackaging operations may be added to the waste containers, including but not limited to: absorbent (e.g., Waste Lock 770 [sodium polyacrylate]), alkaline batteries, Fantastik bottles used during decontamination, miscellaneous hand tools, paper/plastic tags and labels, plastic/metal wire ties, PPE, plastic sheeting used for contamination control, rags and wipes (Kimwipes), and original packaging material (e.g., metal, plastic bags, plywood sheathing, rigid liner lids cut into pieces).

On a waste stream basis, the two predominant isotopes by mass for waste stream LA-MIN02-V.001 are Pu-239 and U-238 while over 95 percent of the total activity is from Pu-239, Pu-240, and Pu-241. The radiological characterization information is presented in Section 7.4.2.

The waste stream contains RCRA-regulated constituents and is assigned the following EPA HWNs: F001, F002, F005, D004, D005, D006, D007, D008, D009, D010, D011, D018, D019, D021, D022, D035, D038, D039, and D040. This waste stream does not include wastes containing or contaminated with PCBs. Refer to Section 7.4.3 for the waste stream chemical content evaluation.

Based on the review of container documentation and documented waste management practices, no prohibited items are specifically identified in the waste stream. However, the presence of prohibited quantities of liquid due to dewatering or incomplete absorption is possible. In addition, procedures also allowed containers greater than four liters, sealed with tape, to be used for waste packaging until LANL WIPP-approved procedures were implemented. The presence of containerized (e.g., butane lighter, lighter fluid can, unpunctured aerosol cans, vials) and uncontainerized liquids have also been observed in TA-55 waste. Lead shielding is often used to increase handling safety, and thick shielding can obscure RTR observations. Additionally, based on interviews with site personnel performing VE and prohibited item disposition repackaging, internal cans (both shielded and unshielded) have been measured for dose rate during repackaging and found to contain waste with radiation levels exceeding 200 mrem/hr. Waste packages containing prohibited items identified during characterization activities will be segregated then dispositioned appropriately and/or repackaged to remove the items prior to certification and shipment. Refer to Section 7.4.4 for detailed waste stream prohibited items information.

Waste packaging procedures for LANL waste streams have been modified several times since the beginning of recovery operations and containers in this waste stream include a variety of configurations with up to four layers of confinement. RTR will confirm TRUCON code LA112/212. However, TRUCON codes LA126/226, SQ112/212, SQ113/213, and SQ129/229 have been identified as suitable for individual containers in this waste stream. Refer to Section 7.5 for detailed packaging information.

Waste stream LA-MIN02-V.001 meets the definition of waste materials that have common physical form, that contain similar hazardous constituents, and that are generated from a single process or activity. This waste stream was generated during TA-55 R&D/fabrication and associated recovery, facility and equipment maintenance, D&D, waste repackaging, and below-grade retrieval operations. Refer to Section 4.3.7 for detailed waste stream delineation information.

2.4 Waste Stream LA-MIN04-S.001 (Salt Waste)

Summary Category Group:	S3000 – Homogeneous Solids
Waste Matrix Code Group:	Salt Waste
Waste Matrix Code:	S3140
TRUPACT-II Content Code:	LA124/224
Waste Stream ATWIR Identification Number (Reference 6)**:**	LA-MIN04-S.001
Layers of Confinement:	Maximum of Four Layers

Waste Stream Description:

Waste stream LA-MIN04-S.001 consists primarily of inorganic homogeneous solid waste (salt waste) generated in TA-55. The waste is largely comprised of salts which are a byproduct from a variety of plutonium metal purification operations including electrorefining, molten salt extraction, salt stripping, fluoride reduction, and direct oxide reduction. Salts serve as a transportation vehicle for plutonium ions and provide a trap for impurities that are driven or extracted out during the purification process. Salt waste can include varying mixtures of calcium chloride, cesium chloride, lithium chloride, magnesium chloride, potassium chloride, sodium chloride, zinc chloride, residual entrained calcium and zinc metal, and various plutonium and americium compounds. The waste may also be contaminated with solvent metals and reagent materials such as barium, bismuth, cadmium, calcium carbonate, gallium, lead, molybdenum, niobium, tantalum, titanium, tungsten, vanadium, yttrium (Y), and zirconium. Salts can be cemented and disposed of separately in waste stream LA-CIN01.001. A small fraction of debris waste (less than 50 percent by volume) including plastic packaging, metal packaging, PPE, and magnesium oxide (MgO) crucible pieces may also be present. Finally, some secondary waste generated during remediation/repackaging operations may be added to the waste containers, including but not limited to: absorbent (e.g., Waste Lock 770 [sodium polyacrylate]), alkaline batteries, Fantastik bottles used during decontamination, miscellaneous hand tools, paper/plastic tags and labels, plastic/metal wire ties, PPE, plastic sheeting used for contamination control, rags and wipes (Kimwipes), and original packaging material (e.g., metal, plastic bags, plywood sheathing, rigid liner lids cut into pieces).

On a waste stream basis, the two predominant isotopes by mass for waste stream LA-MIN04-S.001 are Pu-239 and U-238 while over 95 percent of the total activity is from Pu-239, Pu-240, and Pu-241. The radiological characterization information is presented in Section 8.4.2.

The waste stream contains RCRA-regulated constituents and is assigned the following EPA HWNs: F001, F002, F005, D004, D005, D006, D007, D008, D009, D010, D011, D018, D019, D021, D022, D035, D038, D039, and D040. This waste stream does not include wastes containing or contaminated with PCBs. Refer to Section 8.4.3 for the waste stream chemical content evaluation.

Based on the review of container documentation and documented waste management practices, no prohibited items are specifically identified in the waste stream. However, procedures allowed containers greater than four liters, sealed with tape, to be used for waste packaging until LANL WIPP-approved procedures were implemented. The presence of containerized (e.g., butane lighter, lighter fluid can, unpunctured aerosol cans, vials) and uncontainerized liquids have also been observed in TA-55 waste. Lead shielding is often used to increase handling safety, and thick shielding can obscure RTR observations. Additionally, based on interviews with site personnel performing VE and prohibited item disposition repackaging, internal cans (both shielded and unshielded) have been measured for dose rate during repackaging and found to contain waste with radiation levels exceeding 200 mrem/hr. Waste packages containing prohibited items identified during characterization activities will be segregated then dispositioned appropriately and/or repackaged to remove the items prior to certification and shipment. Refer to Section 8.4.4 for detailed waste stream prohibited items information.

Waste packaging procedures for LANL waste streams have been modified several times since the beginning of recovery operations and containers in this waste stream include a variety of configurations with up to four layers of confinement. RTR will confirm TRUCON code LA124/224. Refer to Section 8.5 for detailed packaging information.

Waste stream LA-MIN04-S.001 meets the definition of waste materials that have common physical form, that contain similar hazardous constituents, and that are generated from a single process or activity. This waste stream was generated during TA-55 R&D/fabrication and associated recovery, facility and equipment maintenance, D&D, waste repackaging, and below-grade retrieval operations. Refer to Section 4.3.7 for detailed waste stream delineation information.

3.0 ACCEPTABLE KNOWLEDGE DATA AND INFORMATION

TRU waste destined for disposal at the WIPP must be characterized prior to shipment. The WIPP-WAP (Reference 1) permits use of knowledge of the materials and processes that generate and control the waste, and a clear and convincing argument about the characteristics of the waste is provided. The AK characterization documented herein complies with the requirements of the WIPP-WAP and was developed in accordance with CCP-PO-001 (Reference 7), and CCP-TP-005 (Reference 8).

The references and AK sources used to prepare this report are listed in Section 10.0 and 11.0, respectively. The AK sources referenced within this report by alphanumeric designations (e.g., C001, D001, DR001, M001, P001, and U001) correspond to the Source Document Tracking Number using the following convention:

- C – Correspondence
- D – Documents
- DR – Discrepancy Resolution
- M – Miscellaneous
- P – Procedures
- U – Unpublished

4.0 REQUIRED PROGRAM INFORMATION

This section presents the waste management program information required by the WIPP-WAP (Reference 1). Included is a brief operational history of this facility, summaries of the missions, discussions of waste generating operations, and descriptions of the site's waste management program as it relates to these waste streams. Attachment 1 of CCP-TP-005 (Reference 8) provides a list of TRU waste management program information required to be developed as part of the AK record.

4.1 Facility Location

LANL is located in Los Alamos County in north-central New Mexico, approximately 60 miles north-northeast of Albuquerque and 25 miles northwest of Santa Fe. LANL has been owned and operated by the DOE and its predecessor for over 50 years. The LANL site encompasses 43 square miles subdivided into 49 TAs. Figure 1, Location of LANL Site, shows the location of LANL and the TAs. As illustrated by Figure 2, Location of the PF-4 at TA-55 LANL Site, PF-4 is located in TA-55 (References D025 and D084).

4.2 LANL Operational History

In 1942, the U.S. Army Manhattan Engineering District established Project Y to develop the atomic bomb. The research quickly progressed to a point that required a remote site for experimental work, and the Army selected the Los Alamos Ranch School for Boys as an appropriate location. The Undersecretary of War directed acquisition of the school site, which consisted of a group of approximately 50 log buildings on a 790-acre site northwest of Santa Fe. The project ultimately acquired an additional 3,120 privately-owned acres and 45,666 acres of public land managed by the U.S. Forest Service. In 1943, this land became known as the Los Alamos Site, later as the Los Alamos Scientific Laboratory. It is now named the Los Alamos National Laboratory. Since its inception, the University of California (UC) has operated LANL for the federal government. With the end of World War II and the growth of international competition, a national policy of maintaining superiority in the field of atomic energy was established. Congress chose to sustain the Los Alamos site; the U. S. Atomic Energy Commission (AEC) received control of LANL from the Army and renewed the operating contract with UC. During subsequent years, LANL continued to expand at a steady rate, first under the AEC and later under the Energy Research and Development Administration. Since 1978, LANL has operated under the control of the DOE.
In 2006, a consortium of Bechtel, UC, BWX Technologies, and URS Energy and Construction (URS acquired Washington Group International in 2007) formed Los Alamos National Security, LLC (LANS) to operate LANL (References D041, D071, D082, and D083).

4.2.1 LANL Site Mission

Since its inception, the primary mission of LANL has been nuclear weapons R&D. LANL's current mission supports disciplines that enable LANL to contribute to defense, civilian, and industrial needs. Included in this mission are the research, design, development, and analysis of nuclear weapons components; support for research programs in the national interest; energy and environmental research; and environmental management. In achieving mission objectives, LANL used, and continues to use, hazardous and radioactive materials. Solid waste containing TRU contamination has been, and continues to be, generated as a result of plutonium R&D, processing and recovery operations, facility and equipment maintenance, and D&D projects (References D071, D082, and D083).

4.2.2 TA-55 PF-4 Mission

Since the beginning of its operations in 1979, the primary missions of the PF-4 were basic SNM research and technology development; processing a variety of plutonium-containing materials; and preparing reactor fuels, heat sources, and other SNM devices. Research and technology development at the PF-4 includes collaborations with other LANL facilities and DOE sites (e.g., Sandia National Laboratories [SNL]). The PF-4 has been used for the extraction and recovery of plutonium from waste, residues, site return, and scrap generated from operations at various LANL facilities and other DOE sites in the defense complex. These materials are processed to recover as much plutonium as economically feasible. The recovered plutonium is converted into pure plutonium feedstock to be returned to weapons production or related operations. The plutonium recovery process handles primarily Pu-239 and Pu-242 based samples. These are categorized based upon isotopic make-up into various Material Types (MTs). The associated research operations involve other plutonium isotopes, different uranium isotopes, and minor amounts of several other radioisotopes (References C238, D025, D045, D071, D092, M019, M215, M216, M217, M218, M219, and M222).

In addition to weapons production, Pu-238 heat sources have been manufactured at LANL by the Actinide Ceramics and Fabrication Group in PF-4. The operations associated with heat source manufacturing, metallography, Pu-238 recovery, and scrap processing have been conducted in the 200 Wing (Rooms 201, 204, 205, 206, and 207) of PF-4. As described in Section 4.4.7, the following Pu-238 heat source programs have been conducted in PF-4 since 1979 (References C192, C194, C197, C212, C220, and D071):

- Defense Programs MilliWatt Generator (MWG): Between 1979 and 1990, the Savannah River Site (SRS) produced the Pu-238 feed material to manufacture MWG heat sources to provide electrical power for defense nuclear weapons and defense satellite programs.

- National Aeronautics and Space Administration (NASA) Space Missions: Between 1979 and 1990, some of the Pu-238 was used for NASA space missions, including the 1984-1985 Galileo space mission.

- War Reserve Quality Heat Sources and Defense Program Radioisotope Thermogenerators (RTGs): From 1981 to 1990, LANL manufactured 3,000 War Reserve Quality Heat Sources under the Defense Program MWG Heat Source Program. These heat sources were transferred to the General Electric Neutron Devices Facility to be incorporated into Defense Program RTGs.

- NASA General Purpose Heat Source (GPHS) and Light Weight Radioisotope Heater Unit (LWRHU) Programs: From 1992 to 2002, a portion of the Pu-238 used in NASA's GPHS and LWRHU for the Cassini space mission was recycled from Defense Program Pu-238 and from the MWG Heat Source Program.

- Defense Program MWG Heat Source Recycling: Recycling, recovery, and reprocessing of Pu-238 from Defense Program MWG heat sources for use in both Defense Program and NASA missions have continued intermittently through 2002 and were expanded in 2003. Approximately 200 sources a year were recycled to meet projected production schedule requirements for both national security and NASA programs. This process is currently inactive.

These TA-55 R&D/fabrication and associated recovery, facility and equipment maintenance, D&D, waste repackaging, and below-grade retrieval operations are the sources of these waste streams. Although TA-55 is comprised of several support buildings, waste streams LA-MHD01.001, LA-CIN01.001, LA-MIN02-V.001, and LA-MIN04-S.001 are limited to waste originally generated in PF-4 at TA-55.

4.2.3 Defense Waste Assessment

DOE/WIPP-02-3122 (Reference 3) requires generator sites to use AK to determine if the TRU waste streams to be disposed at WIPP meet the definition of TRU defense waste. Based on guidance from DOE, TRU waste is eligible for disposal at WIPP if it has been generated in whole or part by one of the atomic energy defense activities listed in Section 10101(3) of the *Nuclear Waste Policy Act of 1982* (NWPA) (Reference 19).

Waste streams LA-MHD01.001, LA-CIN01.001, LA-MIN02-V.001, and LA-MIN04-S.001 were generated by or originated from materials used in the process to recover plutonium from residues, metal fabrication, and R&D in support of weapons development. These plutonium processing operations include:

- Preparing ultra-pure plutonium metals, alloys, and compounds
- Preparing (on a large scale) specific alloys, including casting and machining these materials into specific shapes
- Determining high-temperature thermodynamic properties of plutonium
- Reclaiming plutonium from scrap and residues produced by numerous feed sources
- Disassembling components for inspection and analysis
- Manufacturing of parts on a limited basis
- Processing plutonium oxide, uranium oxide, americium oxide and mixtures of plutonium and uranium oxides for reactor fuels

The operations generating wastes in LA-MHD01.001, LA-CIN01.001, LA-MIN02-V.001, and LA-MIN04-S.001 are described in detail in Section 4.4 of this report. Although some non-defense program related projects were performed in PF-4, most of the operations generating these waste streams are consistent with the WIPP-WAC defense description. Waste from non-defense program operations were commingled in the final waste containers to such an extent that segregation is not possible. It should be noted that a defense determination has previously been accepted for waste originating from these PF-4 weapons operations (References C040, C057, C067, C082, and D041).

TRU waste contained in these waste streams were also contaminated by the programs associated with the manufacturing of Pu-238 heat sources described in Section 4.4.7. The original source of plutonium for all LANL Pu-238 operations was the defense production K Reactor at the SRS. From 1979 to 1980, Pu-238 was generated by two production campaigns involving the irradiation of neptunium targets. The neptunium was a defense by-product from the production of Pu-238 for weapons. Pu-238 of such domestic origin is considered “defense born” from waste management activities associated with by-product materials from “atomic energy defense activities” (References C192 and C212).

As described in Section 4.4.7, both defense and non-defense programs were conducted in PF-4. Processing and manufacturing of heat sources for defense and non-defense applications use identical processing steps and common equipment and glovebox lines. Processing can occur simultaneously within the same line of gloveboxes and TRU waste is generated throughout the process and manufacturing steps. The wastes from defense and non-defense Pu-238 programs are not segregated; the wastes from these campaigns are packaged in the same waste containers. The resulting process wastes are commingled and managed as defense TRU waste generated in whole or part by

atomic energy defense activities. It has also been determined that future segregation of defense from non-defense waste by Pu-238 operations at LANL is not feasible, due to the fact that these projects are performed in the same lines. Additionally, since the source of Pu-238 feed for these programs includes recycled Pu-238 materials, the resulting wastes will be commingled with contamination originating from defense activities (References C190, C192, C204, C212, and M308).

In May of 2004, the DOE Carlsbad Field Office (CBFO) determined that the LANL Pu-238 wastes originally generated at PF-4 in TA-55 are generated in whole or in part by atomic energy defense activities and therefore are defense wastes that can be disposed of at the WIPP if all of the other requirements applicable to TRU waste to be placed in the repository are met (Reference C212).

Based on a review of the AK, waste containers in LA-MHD01.001, LA-CIN01.001, LA-MIN02-V.001, and LA-MIN04-S.001 meet the WIPP-WAC (Reference 3) definition of TRU defense waste and can be categorized as items D, E, and G of the activities listed in Section 10101(3) of the NWPA (Reference 19), and detailed in the *Interim Guidance on Ensuring that Waste Qualifies for Disposal at the Waste Isolation Pilot Plant* (Reference 4):

- Defense nuclear waste and materials by-products management
- Defense nuclear materials production
- Defense research and development

4.2.4 Spent Nuclear Fuel and High-Level Waste Assessment

Public Law 102-579, *The Waste Isolation Pilot Plant Land Withdrawal Act* (Reference 5) prohibits the disposal of spent nuclear fuel and high-level waste as defined by the NWPA (Reference 19) at WIPP. According to the NWPA, spent nuclear fuel is “fuel that has been withdrawn from a nuclear reactor following irradiation, the constituent elements of which have not been separated by reprocessing.” The *DOE Radioactive Waste Management Manual* (Reference 11) expands on this definition to clarify that “Test specimens of fissionable material irradiated for research and development only, and not production of power or plutonium, may be classified as waste, and managed in accordance with the requirements of this Order when it is technically infeasible, cost prohibitive, or would increase worker exposure to separate the remaining test specimens from other contaminated material.” High-level waste is defined by the NWPA as “the highly radioactive material resulting from the reprocessing of spent nuclear fuel, including liquid waste produced directly in reprocessing and any solid material derived from such liquid waste that contains fission products in sufficient concentrations, and other highly radioactive material that the Commission, consistent with existing law, determines by rule requires permanent isolation.” These waste streams consist of waste contaminated with radioactive material from TA-55 R&D/fabrication and associated recovery, facility and equipment maintenance, D&D, waste repackaging, and below-grade retrieval operations. These operations did not

involve separation or reprocessing of constituent elements from reactor fuel. These waste streams do not contain irradiated fuel elements withdrawn from a reactor or pieces thereof. Therefore, the wastes are not a spent nuclear fuel, not high-level waste, not historically managed as high-level waste, and are eligible for disposal at WIPP as TRU waste (References 5, 19, D023, M014, M015, P094, and P118).

4.3 TRU Waste Management

The LANL waste management goal is that all waste generated is stored, transported, treated, and disposed of in a manner that protects the environment, workers, and the public. The overall requirements for managing waste are summarized in the Laboratory Performance Requirement (LPR) document, *Environmental Protection* (Reference D059). Currently, LANL TRU Programs and waste management personnel are responsible for establishing waste management programs that are consistent with applicable DOE orders and state and federal regulations. The State of New Mexico issued LANL's current Hazardous Waste Facility Permit (HWFP) to the DOE and LANS in November 2010 (References D003, D025, and D041).

TRU mixed and non-mixed waste is generated at LANL primarily from R&D, processing and recovery operations, and D&D projects. On April 22, 2003, weapons fabrication and manufacturing operations at LANL were re-established with the successful production of the first nuclear weapons pit in 14 years in the DOE complex that meets specifications for use in the U.S. stockpile (References D013, D025, D041, and M006).

The following sections discuss TRU waste identification systems used at LANL; historical and present-day TRU waste management practices; and LANL treatment, storage, and disposal facilities (TSDFs) for TRU mixed waste.

4.3.1 TRU Waste Identification and Categorization

Several waste identification and categorization conventions have been used as part of waste management operations for TRU mixed waste generated at LANL. The waste identification system used for a particular waste container depends largely upon the date of placement into storage. Specific waste identification conventions at LANL include the assignment of Radioactive Solid Waste Disposal (RSWD) Codes, Item Description Codes (IDCs), Nuclear MT, Process/Status (P/S) Codes, SNM Matrix Codes, and TRUCON Codes to containers of TRU waste. When applicable, these waste identification conventions were used to assist the original waste stream delineations (References 9, D083, and D084).

<u>RSWD Codes</u>

RSWD Codes were first used at LANL in January 1971 and were discontinued in 1992. The RSWD Codes are a two-digit code preceded by the letter "A". The RSWD Codes were used at LANL to categorize TRU waste forms generated by the various on-site

facilities. The RSWD Codes associated with waste in these waste streams are defined in Figure 3, RSWD Code Descriptions Table (References D025, D041, D083, and M296).

IDCs

IDCs were first used at LANL in July 1984 and discontinued in 1992. The IDCs generally consist of a three-digit number representing the most general descriptions of TRU waste. The IDCs associated with waste in these waste streams are listed in Figure 4, Item Description Codes (IDC) Table (References D025, D041, D083, and M296).

TRUCON Codes

TRUCON codes were first used at LANL in October 1992, and are presently in use. The system of TRUCON codes was developed by the DOE to provide a consistent waste description for TRU waste generated throughout all of DOE's facilities. The TRUCON codes are intended to assist DOE in establishing the characteristics of TRU waste to be certified for transportation to the WIPP. LANL TRUCON codes consist of a three-digit number preceded by the letters "LA" and followed by a single character suffix that further defines the waste type, source, and/or packaging configuration. Detailed definitions of the LANL TRUCON codes are found in the TRUCON codes (References 9, D025, D041, D083, and D084).

LANL identification systems used for tracking SNM provide additional information about the physical form and chemical content of TRU waste. SNM tracking systems include the use of P/S Codes, SNM Matrix Codes, and MT Codes (References D025 and D041).

P/S Codes

Individual plutonium processing operations at the LANL PF-4 are assigned a unique identifier called a P/S Code. These codes are used for the purpose of nuclear material accounting. A consolidated listing of the P/S Codes is provided in Figure 5, TA-55 Process/Status Code Index Table (References D025, D041, D083, and M298).

Waste items are labeled with a unique Item Identification (ID) Code that contains information on the waste material parameter of the item (the SNM Matrix Code) and an embedded P/S Code that corresponds to nuclear materials accountability for the operation that produced the waste item. The P/S Code refers to a specific part of an operation within the overall plutonium-recovery process, but generally applies to more than one glovebox, or to the same operation carried out in multiple locations or gloveboxes in the PF-4. Recording the P/S Codes on disposal documents was inconsistent until about 1995 (References D025, D041, D083, D084, M019, M215, M216, M217, M218, M219, M222, M224, M226, M236, M296, and P036).

Starting in 1987, PF-4 began its current system of tracking waste items by their nuclear material content, using the computerized Material Accountability and Safeguards System (MASS). The MASS and associated P/S Codes were developed and are used strictly to track accountable nuclear material throughout the plutonium-recovery process. However, the P/S Codes provide the finest level of detail available to associate waste items with a specific operation of origin. Therefore, the P/S Code System is used extensively in the description and documentation of AK information for RCRA and for chemical constituents for the plutonium-processing derived waste. While a P/S Code can be associated with most waste items generated after 1987 and all items generated after 1995, the P/S Code does not provide a method of segregating waste or delineating waste streams. TRU waste items are packaged into drums based on the isotopic material content of the waste and Nondestructive Assay (NDA) characteristics without regard to process of origin (References C187, D025, D041, D083, and D084).

Matrix Codes for SNM

For the purposes of SNM tracking, individual waste items generated at the PF-4 are assigned a SNM matrix type that provides a description of the waste physical form. Discard Limits (DLs) for plutonium in the various types of waste matrices are established by the waste-generating group, and approved by the LANL division office and the DOE Albuquerque Operations Office (References C187, D025, D041, D083, and D084).

MTs

In addition to the IDC, TRUCON, and RSWD Codes, which provide information about the physical form, matrix, and chemical nature of waste, LANL employs MT designations to describe the relative isotopic composition of radioactive contamination. The designated MT is used to describe the isotopic composition of common blends of radioactive materials used within the DOE complex. The most common MTs present in LANL TRU waste are weapons-grade plutonium (MT-51 and -52); fuel grade (MT-53 and -54); reactor-grade plutonium (MT-55 through -57); enriched Pu-242 (MT-42); and heat-source plutonium (MT-83). The radionuclide and MT content of LANL TRU waste is discussed in Sections 5.4.2, 6.4.2, and 7.4.2 (References D025, D041, and D083).

4.3.2 Historical TRU Waste Management Practices

In 1970, the AEC, a predecessor of the DOE, directed its facilities to begin storing TRU waste in such a way that it could eventually be retrieved for shipment to WIPP. LANL then began segregating TRU waste from other wastes and dedicating specific areas within Area G at TA-54 for management (References D025, D041, D083, and D084).

Historically (i.e., the period 1970 to 1987, prior to the implementation of the LANL TRU waste certification plan) wastes from all TRU waste-generating activities at LANL were handled and packaged according to the Los Alamos Scientific Laboratory Health, Safety and Environment Manual. Waste management practices for radioactive waste initially followed AEC requirements (U.S. Atomic Energy Commission AEC Manual: Chapter 0511, *Radioactive Waste Management* [AEC 1973]) (Reference 10) and later, DOE Orders 5820.1, *Management of Transuranic Contaminated Materials* and 5820.2A, *Radioactive Waste Management* (DOE, 09/30/82 and 02/06/84, respectively) (Reference 12). Detailed waste handling and management requirements were documented in division and group-level operating procedures (References D025, D041, D083, and D084).

In 1984, the *Los Alamos TRU Waste Certification Plan for Newly Generated TRU Waste* (Reference D037) was prepared for implementation with LANL newly generated TRU waste. Each LANL waste generator was required to develop an attachment to this plan to define the details of the waste certification functions and controls that applied to their specific operations and waste streams (References D025, D041, D083, and D084).

Originally located at TA-21, PF-4 was relocated to the present-day site at TA-55 in 1978, where operations commenced in 1979. Waste management at PF-4 was focused on minimizing the amount of waste generated and minimizing the plutonium content of that waste (References P102 and P188). Personnel were requested to sort potentially recyclable TRU waste items (i.e., those containing recoverable amounts of plutonium) into classes such as rubber, plastics, rags, non-plutonium metals, glass, oils, cans, sweepings, etc. These waste items were assayed, and based on the plutonium level relative to the DL, material was either sent to recovery operations or to “20-year” retrievable storage. Liquids were explicitly prohibited from any container of solid waste materials (References D025, D041, D083, D084, P102, and P188).

TRU waste generators were required to complete the RSWD form. The RSWD form included the waste IDs listed in Figure 3. An example of the RSWD form is included in Figure 6, Example Generator Container Specific Documentation. The physical description of each waste item generated at PF-4 was documented on a Discardable Waste Log Sheet, also shown in Figure 6 (References D025, D041, D083, and D084).

4.3.3 Present-Day TRU Waste Management Practices

Currently, LANL radioactive waste management practices follow DOE Order 435.1, *Radioactive Waste Management* (Reference 11). LANL waste management requirements applicable to TRU mixed and non-mixed waste are addressed in three Laboratory Implementation Requirements (LIRs) as follows (References D025, D041, D083, and D084):

- General Waste Management Requirements (References M014 and M300)
- Hazardous and Mixed Waste Requirements (References M016 and M301)

- Managing Radioactive Waste (References M015 and M302)

The LANL waste analysis plan for storage of transuranic mixed waste is contained in Attachment A.2 to the LANL Hazardous Waste Permit (Reference D004).

4.3.4 TRU Waste Generator Documentation Requirements

TRU waste generators at LANL are required to complete forms that document the physical, chemical, and hazardous nature of waste and provide substantial AK information. Some of these forms are specific to the Chemistry and Metallurgy Research (CMR) and Plutonium Facilities, which generate the majority of LANL's TRU waste. LANL has used a Waste Profile Form (WPF) system since May 1991. Waste generators must complete a WPF for waste-stream specific information. This form documents the process that generated the waste, the location of waste generation, the physical form of the waste, the RCRA-regulated constituents present, and the radionuclides present. Guidance to generators for completion of the WPF is given in the Laboratory Implementation Guidance (LIG) document LIG 404-00-03.1, *Waste Profile Form Guidance* (References D025, D041, M012, and M303).

Generators must provide new WPFs when a process change results in a change in waste composition or when a new waste is generated. For routinely generated waste (i.e., routine operations waste), the WPF must be re-evaluated annually to ensure the information is current and correct. The WPF includes the Land Disposal Restrictions (LDR) notification, which further documents the RCRA-regulated nature of waste. Specific information that is requested on the WPF includes (References D025, D041, D083, and D084):

- Point of generation
- Method of characterization
- Waste categories and descriptions
- Presence of toxic metals and an estimate of concentration
- Presence of organic compounds and an estimate of concentration
- Identification of RCRA-listed hazardous constituents
- Identification of RCRA hazardous characteristics (i.e., ignitability, corrosivity, reactivity, toxicity)
- Identification of the radiological characteristics of the waste

The information on the WPF must be certified as complete and accurate, as evidenced by the signature of the waste generator. The annual re-evaluation complies with the characterization frequency requirement of 20 New Mexico Administrative Code 4.1, Subpart V, 264.13(b)(4), revised November 1, 1995 (References D025 and D041). Waste generation information for individual TRU waste containers is required to be documented on the TRU Waste Storage Record (TWSR). The TWSR is reviewed and approved in accordance with AP-SWO-006, *Review and Completion of the TWSR* (Reference D058) and is not approved unless the waste is associated with a valid, active WPF. The TWSR documents the type of packaging, generating organization, radionuclide and hazardous material content of the waste, dose rates, TRUCON code, and storage site information (e.g., building number, location, date of receipt). Guidance to generators for completion of the TWSR is provided in LIG document LIG404-00-01.2, *Waste Generator Guidance for Completing the TRU Waste Storage Record* (TWSR) (References D025, D041, D083, D084, M013, M296, and M304).

The TWSR form for PF-4 waste is completed in the Nuclear Materials Technology (NMT) Division Waste Management System (WMS) database and reviewed electronically. The TWSR is reviewed and approved in accordance with AP-SWO-006, *Review and Completion of the TWSR* (Reference D058), and is not approved unless the waste is associated with a valid, active WPF. Examples for Waste Acceptance Criteria (WAC) exceptions include tritium-contaminated waste and waste packaged in nonstandard waste containers. The Waste Acceptance Criteria Exception Form (WEF) is reviewed according to AP-SWO-015, *Processing Waste Acceptance Criteria Exception Forms* (References D025, D041, and D057).

The physical description of each waste item generated is documented on a Waste Origination and Disposition Form (WODF) by the waste generator according to controlled procedures (References P090, page 24; P091, Appendix 1; and P095, Appendix B in *Inspecting, Packaging, Rejecting, and Remediating Transuranic Waste for WIPP and for TA-54 Safe Storage*). Items are bagged out of gloveboxes and sent to the Waste Management section, where multiple items are placed into drums (References D025 and D041).

Waste items are labeled with an ID code that contains information on the waste material parameter (WMP) of the item and an embedded P/S Code that corresponds to nuclear materials accountability for the operation that produced the waste item. In the packaging operation for legacy waste, a standard form, the Discardable Waste Log Sheet (DWLS), was used to list each ID code (Reference P090, page 25; P091, Appendix 2; and P095, Appendix C). This form was signed by the waste packager and approved by QA personnel (References D025 and D041).

Both the WODF and DWLS for each TRU waste container are maintained as hard copy records by the generator. Many of these waste tracking ID codes for individual items in containers of debris waste are compiled in a list that correlates item codes with containers or in a database maintained as the WMS (References D025, D041, and U004).

The WODF and DWLS forms were often attached to the Certified Waste Storage Record (CWSR) for legacy waste. The CWSR documented waste packaging information including the type of packaging, generating organization and location, radionuclide content, dose rates, presence of toxic or corrosive materials, and storage site information. The CWSR was modified in the early 1990s and changed to the TWSR (References D037 and P090).

Figure 6 includes an example of legacy container records. Note that this waste container example (LA00000057745) contains waste items associated with seven different P/S Codes (BM, EOC, FF, OM, SS, TIGR, and XO) (See Figure 5, TA-55 Process/Status Code Index Table). Each of the waste items is linked to a unique WODF. Information encoded in the ID code indicates that five of the seven waste items are metal (MET), while the remaining two from P/S Code SS are crucibles (XBL). These and other matrix abbreviations used by waste management personnel are listed in Appendix D of *Performing Visual Examinations of TRU Waste* (References D025, D041, and P097).

For waste generated after July 17, 2001 (i.e., LANL newly generated), the physical description of each waste item generated is documented on a WODF by the waste generator in accordance with *TA-55 Transuranic Waste Interface Document* (TWID) (Reference P092) and *Performing Visual Examinations of TRU Waste* (Reference P097). The term "LANL newly generated," as it is used in this report, is related to LANL waste management practices and is not intended to indicate how CCP will characterize LANL generated TRU waste. The WODF is generated electronically in the WMS database. The P/S Code for waste items is also documented on this form. The PF-4 at TA-55 tracks waste items both by the P/S Code from which they originated as well as by their material content, using the computerized MASS. Waste items are labeled with a code that contains information on the WMP of the item and an embedded P/S Code that corresponds to the operation that produced the waste item. In the packaging process, the WMS is used to list each ID code and record its matrix material electronically (Appendix B in *Performing Visual Examinations of TRU Waste* [Reference P097]). This form is electronically signed by the waste packager and approved by QA personnel. The WODF(s) for each item in a TRU waste container are maintained electronically and a hard copy is printed after all approvals are in place (References D025 and D041). Figure 6 includes an example of a LANL newly generated container. Note that this waste container (LA00000059359) contains waste items generated by four different P/S Codes (ITF, CA, RB, and RBJ); each waste item is listed with its own completed WODF. (The P/S Code of each waste item is listed in the Measurement Information field under PS near the center of the WODF screen).

Information encoded in the ID indicates that one of the waste items is combustible waste (COM), another is rubber (RUB), and the remaining four are plastics (PLS) (References D025 and D041).

4.3.5 LANL Treatment, Storage and Disposal Facilities for TRU Waste

LANL's inventory of TRU waste destined for disposal at the WIPP is stored at TA-54, Area G, which has been in operation since 1957. TRU waste management at Area G included drum venting, decontamination and volume reduction, and buried waste retrieval operations. The characterization requirements for storage of TRU mixed waste are contained in the LANL HWFP, Attachment A.2, *Waste Analysis Plan for Transuranic Mixed Waste* (References 17, D025, and D041).

In the late 1970s, facilities throughout the DOE complex recognized the need to upgrade the retrievability of TRU waste. As a result, LANL constructed three asphalt storage pads for TRU and TRU mixed waste storage at Area G, referred to as Storage Pads 1, 2, and 4. The waste containers were configured in densely packed arrays and subsequently covered with earth to provide protection from weather and be consistent with DOE's principle of maintaining exposure as low as reasonably achievable (ALARA) (References D025, D041, D083, and D084).

The Transuranic Waste Inspectable Storage Project (TWISP) was initiated in 1997 to retrieve waste in earthen covered storage at Area G and place the waste in an inspectable configuration in aboveground storage domes (see the *Transuranic Waste Inspectable Project (TWISP) Final Report* (Reference D056). Retrieved containers were vented and fitted with filters; thus, the completion date of the TWISP (December 31, 2001) can be used to establish the drum age criterion if RTR verifies that the drum liner lid, if present, has been punctured. The TWISP was executed in three campaigns. The first, Pad 1, began in March 1997 and was completed in November 1998. The second campaign, Pad 4, was completed in December 1999, and the third campaign, Pad 2 was completed in December 2001 (References C002, C216, D025, D041, D083, and D084).

Waste containers that fail to meet WIPP criteria are sent to the TA-50 Waste Characterization, Reduction, and Repackaging (WCRR) Facility; the TA-54 Building 412 facility formerly known as the Decontamination and Volume Reduction System (DVRS) facility; the TA-54 Dome 231 Permacon; or the TA-54 Dome 375 TRU Oversized Waste Processing Capability Project, also referred to as the Box Line Process, to be safely remediated. The WCRR facility was established in 1979 as the Size Reduction Facility (SRF) to size-reduce non-routine waste items such as decommissioned gloveboxes. In 1993, the name of the SRF was changed to the WCRR Facility to reflect the expanded remediation/repackaging mission. Size reduction operations at the WCRR Facility were discontinued around 1997. The TA-54 Building 412 facility operated for a short time in the early 2000s and resumed operations again in 2010. The TA-54 Dome 231 Permacon was established in 2006.

The TA-54 Dome 375 Box Line Process began operations in 2012. All three TA-54 facilities perform the same basic functions including sorting, segregating, size reduction, and repackaging operations on waste containers that contain WIPP nonconforming items and safely processes oversized containers (e.g., fiberglass-reinforced plywood [FRP] waste boxes, corrugated metal boxes [CMBs]). Figure 1 identifies the general location of these facilities (References C163, C165, C185, D013, D026, D041, D062, P154, P158, P159, P192, P194, P195, P196, P197, P198, P199, P203, and P204).

4.3.6 Types and Quantity of TRU Waste Generated

The waste streams described by this report have been characterized as TRU mixed waste. The characterization information presented in this document is based on the review of container-specific information for those containers listed in the most current AK Tracking Spreadsheet. Refer to Sections 5.2, 6.2, 7.2, and 8.2 for the container counts and volumes for each individual waste stream.

Each payload container shipped to the WIPP will be certified in accordance with CCP-PO-002 (Reference 16), as containing more than 100 nanocuries per gram (nCi/g) of alpha emitting isotopes with half-lives greater than 20 years. Overpacking of waste containers for the purposes of payload management, as described in Appendix E of the WIPP-WAC (Reference 3) will not be implemented for these waste streams. The fraction of waste containers that contain less than 100 nCi/g has not been estimated.

4.3.7 Correlation of Waste Streams Generated from the Same Building and Process

The WIPP-WAP defines a waste stream as waste materials that have common physical form, that contain similar hazardous constituents, and that are generated from a single process or activity (Reference 1). Based on a review of the AK documentation, waste streams LA-MHD01.001, LA-CIN01.001, LA-MIN02-V.001, and LA-MIN04-S.001, were generated during TA-55 R&D/fabrication and associated recovery, facility and equipment maintenance, D&D, waste repackaging, and below-grade retrieval operations. Container-specific records have been reviewed to verify the physical composition and origin of the individual waste stream inventories. It has been determined that every container included in the most current AK Tracking Spreadsheet was generated from the operations described in Section 4.4. In addition, each of these waste streams have been categorized into a single Waste Matrix Code (as described in Sections 5.4.1, 6.4.1, 7.4.1, and 8.4.1) and have been classified entirely as TRU mixed waste (as described in Sections 5.4.3, 6.4.3, 7.4.3, and 8.4.3). The following subsections provided further basis for the waste stream delineations (References C171, M019, M156, M215, M216, M217, M218, M219, M222, M224, M226, M236, M238, M241, M242, M273, M274, M275, M276, M279, M296, and M298).

Evaluation of CCP-AK-LANL-007 Containers

This report has combined containers and the relevant AK information from waste stream LA-MHD02.001 previously described in CCP-AK-LANL-007 (Reference 20), with waste stream LA-MHD01.001. Waste containers from LA-MHD02.001 have been combined into waste stream LA-MHD01.001 for the following reasons (References C144 and C145):

- An exclusively Pu-238 waste stream (LA-MHD02.001) was originally created because LANL waste management operations had been attempting to segregate Pu-238 materials originating from defense and non-defense operations based on local DOE decisions made in August 1998. The May 2004 memo from CBFO to Ed Wilmont (Reference C212) resolved this issue by concluding that segregation of a non-defense waste stream is not feasible and all Pu-238 waste containers originally from TA-55 should be managed as defense waste. Additionally, waste stream LA-MHD01.001 currently includes containers loaded with packages of other MTs that have not been segregated from the waste stream based on the radiological content of the containers. Without a defense determination driver for maintaining a separate heat source waste stream, segregation of these containers is unnecessary with the designation of waste streams pursuant to the WIPP-WAP (Reference 1).

- As described in Section 4.3.1, the segregation of existing TA-55 waste containers into separate waste streams was an administrative exercise based on generator identified MTs on a container-by-container basis. Throughout the time period of generation of TA-55 TRU waste, containers were loaded with waste without regard for segregation of different MTs. Consequently, only those containers containing exclusively heat source plutonium waste could be included in waste stream LA-MHD02.001.

- During subsequent CCP characterization activities, NDA has rejected approximately four percent of the containers identified by AK as containing solely heat source plutonium because the predominant isotope was Pu-239.

- As described in Section 4.4, the operations that generated these waste materials are similar and both populations have been assigned the same EPA HWNs because of LANL waste management practices. These operations have generated a population of waste that is similar in material, physical form, and hazardous constituents.

Evaluation of Nonhazardous Debris Containers

The LANL Project 2010 (formerly the LANL TRU Waste Certification Program) delineated a small population of nonhazardous containers, based primarily on the assignment of P/S Codes for specific operations and the date of generation. Initial

shipments of this nonhazardous stream in 1999 included containers of recently-generated debris carefully selected by P/S Code to ensure a nonhazardous population (References 13, DR004, and M310).

Supplemental information was collected on a representative sample of this waste stream to verify that this lot of containers was nonhazardous. Suspect waste packages were removed from individual containers during inspection. Solid sampling of the debris materials was performed and demonstrated that the RCRA metal contaminants would not exceed the regulatory thresholds for this inventory. Since solid sampling of debris waste and inspection and segregation of hazardous items will not be performed for the remainder of the inventory, a more conservative characterization approach has been adopted for the remaining inventory, which is reflected in this report (References D075, DR004, and M310).

As described in Section 5.4.3, this approach is further justified, based on the review of the existing AK documentation for reasons including (References DR004 and M310):

- Several operations identify the potential for RCRA-regulated constituents and most of the P/S Codes generated waste containing leaded gloves prior to May 1992.
- The assignment of P/S Codes was not initiated until 1987 and the codes were inconsistently used until 1995.
- Wastes from multiple P/S Codes are routinely combined in the same container.
- Recovery operations may concentrate RCRA metal contaminants.
- Different EPA HWNs have been assigned to the waste during previous characterization efforts at LANL and RCRA allows for the conservative assignment of EPA HWNs.

All of the waste covered by this report was originally generated by the TA-55 operations described in Section 4.4. Prior to June 2005, CCP had delineated a non-mixed debris waste stream generated by PF-4 plutonium recovery operations (CCP waste stream LA-NHD01.001); however, based on CCP characterization test results, containers previously assigned to the non-mixed population have been reevaluated and assigned to the mixed debris waste stream. There are no longer any containers assigned to the non-mixed waste stream (References 13, DR004, and M310).

<u>Evaluation of Segregated Debris Containers</u>

The LANL Project 2010 also historically categorized PF-4 generated mixed debris waste into two separate waste streams based on physical composition. PF-4 packaging practices resulted in waste segregation by physical matrix type for assay purposes

(References P091 and P098). This practice resulted in many debris containers being comprised exclusively of like material, such as metal, glass, HEPA filters, and combustibles such as plastic and cellulose. LANL determined that two waste streams, one primarily combustible, and one primarily non-combustible would be delineated. However, these materials were generated from the same process operations; contain the same chemical and radiological contaminants, and PF-4 segregation practices resulted in incomplete segregation to the extent that delineation of two debris waste streams is not supported by the AK reviewed by CCP. This conclusion is further supported by an evaluation of pre-Waste Analysis Plan (WAP) RTR data for 529 containers that revealed that more than 15 percent of containers in the combustible waste stream contained more than 50 percent non-combustible material, and more than 11 percent of containers in the non-combustible waste stream contained more than 50 percent combustible material. Based on this information, it was determined that segregation of this population of debris waste containers into two waste streams is not practical and only one waste stream is defined for this population of containers (References U002 and U007).

Evaluation of Homogeneous Waste Containers

LANL's waste management practice has been to handle and package all debris and homogeneous waste in a similar fashion. In addition, waste is packaged in combinations of operations of origin; that is, waste items from several different operations are frequently combined in a single container. As a result, debris waste containers often include lesser quantities of homogeneous solids (less than 50 percent by volume). Homogeneous waste containers that include solids such as hydroxide cake/filter materials, salts, and ash residues are still generated, although infrequently. Characterization activities of these homogeneous solids have discovered that some of the containers include more than 50 percent by volume of heterogeneous debris. This is due in part to the packaging configuration associated with small quantities of homogeneous solids. Homogeneous solids are primarily generated from operations performed in gloveboxes. The waste material may be packaged into a plastic bag, a stainless-steel dressing jar, a slip-top can, and/or an unsealed metal container before it is placed into a plastic bag-out bag. Once removed from the glovebox line the bagged out container(s) may also be put into a secondary stainless-steel slip-top container. Homogeneous solids can also include debris materials such as small pieces of plastic and metal from incomplete combustion, magnesium oxide crucible pieces from metal purification, and precipitated metal fines. Based on this information, LANL generated homogenous solids, except for cemented and absorbed waste, have been reassigned to waste stream LA-MHD01.001. It is expected that some number of these containers will fail RTR or VE for containing greater than 50 percent homogeneous solid waste. These containers will be segregated from the debris waste stream and assigned to the appropriate homogenous waste stream (e.g., LA-MIN04-S.001) (References D041, DR008, M074, P155, P156, P157, and P160).

As described in Section 4.4, numerous PF-4 operations generate process liquids and homogeneous solids. The waste assigned to waste streams LA-CIN01.001, LA-MIN02-V.001, and LA-MIN04-S.001 originated exclusively from TA-55 operations. Cemented waste assigned to waste stream LA-CIN01.001 is generated by the cement fixation process, which receives aqueous and organic liquids with low plutonium concentrations, evaporator bottoms, and salts for immobilization that could have originated from any operation in PF-4. These feed materials (prior to cementation) often contain contaminants from multiple operations, and materials from specific operations are often packaged in the same drum after cementation. An evaluation of this cemented waste confirms that the final physical form by volume (i.e., solidified homogeneous solids) is the same regardless of the liquid/solid wastes treated. Absorbed waste assigned to waste stream LA-MIN02-V.001 is largely comprised of TRU liquids and solids absorbed or mixed with absorbent. An evaluation of this cemented and absorbed waste confirms that the final physical form of each homogeneous waste stream is the same regardless of the liquid/solid wastes treated. The solidification process converts the organic or inorganic material into an inorganic matrix. Salt waste assigned to waste stream LA-MIN04-S.001 is largely comprised of salts which are a byproduct from a variety of plutonium metal purification operations including electrorefining, molten salt extraction, salt stripping, fluoride reduction, and direct oxide reduction. Salts serve as a transportation vehicle for plutonium ions and provide a trap for impurities that are driven or extracted out during the purification process. As discussed in Section 4.3.1, waste in PF-4 is packaged into containers based on isotopic material content of the waste and NDA characteristics without regard to process of origin (i.e., waste from multiple operations is often packaged in the same waste container). In addition, the operations that generated this waste used the same or similar chemical and radiological materials and the waste streams have been assigned the same EPA HWNs (References C121, C147, C155, C171, C173, and D083).

Based on the rationale above, waste streams LA-MHD01.001, LA-CIN01.001, LA-MIN02-V.001, and LA-MIN04-S.001 meet the WIPP-WAP waste stream definition, and further delineation of these waste streams is either unfeasible or unnecessary (Reference 1).

4.4 Description of Waste Generating Process

4.4.1 Overview

<u>Plutonium Processing Operations</u>

Wastes were generated from materials used in the process to recover plutonium from residues, metal fabrication, and R&D operations. The variety of plutonium handling operations includes:

- Preparing ultra-pure plutonium metals, alloys, and compounds
- Preparing (on a large scale) specific alloys, including casting and machining these materials into specific shapes
- Determining high-temperature thermodynamic properties of plutonium
- Reclaiming plutonium from scrap and residues produced by numerous feed sources
- Disassembling components for inspection and analysis
- Manufacturing of parts on a limited basis
- Processing plutonium oxide, uranium oxide, americium oxide and mixtures of plutonium and uranium oxides for reactor fuels
- Pu-238 generator and heat source R&D, fabrication, testing, and recycling

Flow Diagrams

The six operational areas that contributed to these waste streams are:

- Nitrate Operations (References D008 and D036)
- Miscellaneous Operations (References D009 and D032)
- Special Processing Operations (References D010 and D030)
- Metal Operations (References D011 and D029)
- Pyrochemical and Chloride Operations (References D007, D011, and D028)
- Pu-238 Operations (References C212, C220, D071, and D080)

Sections 4.4.2 through 4.4.7 correspond to the six operational areas listed above. Each section describes the operations that generated waste assigned to the debris and homogeneous waste streams. Generalized flow diagrams for legacy and LANL newly generated waste are presented in Figures 7-19. The diagrams for these six operational areas indicate the P/S Codes associated with each of the various sub-operations.

Sections 4.4.8 and 4.4.9 correspond to facility and equipment maintenance and D&D operations which are commonly performed in TA-55. These operations originate in the same areas and generate waste and materials that contain the same chemical and

radiological contaminants described in Sections 4.4.2 through 4.4.7. Process flow diagrams for maintenance and D&D operations are not practical due to the variability and broad nature of these operations.

Section 4.4.10 corresponds to the repackaging and prohibited item disposition operations which repackage TRU waste from various LANL facilities including TA-55. The repackaged waste containers retain their original characterization; therefore, the TA-55 plutonium processing operations and associated chemical and radiological contaminants described in Sections 4.4.2 through 4.4.9 are still applicable. Figure 20, Waste Repackaging and Prohibited Item Disposition Flow Diagram includes a repackaging and prohibited item disposition flow diagram.

Section 4.4.11 corresponds to the below-grade retrieval project which includes the removal of waste from various LANL facilities including TA-55. The TA-55 below-grade waste originated from the same operations described in Sections 4.4.2 through 4.4.9. Figure 21, Below-Grade Drum Retrieval Flow Diagram and Figure 22, Below-Grade Crate Retrieval Flow Diagram include process flow diagrams depicting the general below-grade drum and crate retrieval operations.

4.4.2 Nitrate Operations

The overall goal of the nitrate operations is to recover plutonium from scrap and residues, and produce a purified plutonium oxide product, or for conversion into metal. The primary feed sources for the nitrate operations are plutonium residues from other recovery operations (e.g., chloride operations), metal preparation, metal fabrication, analytical laboratory operations, and residues from other DOE facilities. Nitrate operations can be broken down into the following six steps (References C129, D008, and D036):

- Pretreatment
- Dissolution
- Purification and Oxide Conversion/Refinement
- Americium Oxide Production
- Evaporation
- Cement Fixation

Pretreatment primarily includes physical methods used to separate scrap and residues for the next step–dissolution. It may include burning metal, thermal decomposition, crushing and pulverizing, incineration, scraping, or sorting. Historically, it also may have included calcination, caustic leaching, chemical separation (hydroxide or oxalate precipitation), distillation, filtering of liquids or oils, magnetic separation or passivation. The filtering of liquids or oils was performed under *Oil Recovery* from 1979 to 1989. Vacuum pump oils and other contaminated liquids from various operations were analyzed for nuclear material content. If they met the DL for plutonium, they were mixed with vermiculite and packaged in a drum for disposal. If the liquids contained

plutonium above the DL, they were filtered through a glass frit so as to meet the DL. Any plutonium residue caught in the filter was to be sent to recovery operations. Once in 1979, trichloroethylene was used as a diluent to reduce the viscosity of vacuum pump oil. Heavy metals were not used in the process but were expected to be present from equipment wear (References -C130, D008, D036, and M057).

After pretreatment, solids are sent to dissolution if plutonium concentrations are above the DL. If concentrations are below the DL, solids are sent to solid waste packaging. Plutonium bearing solutions are sent to purification if plutonium concentrations are above the DL. If concentrations are below the DL, solutions are sent to solid waste packaging (References D008 and D036).

Dissolution includes various steps that generate plutonium nitrate solutions for feed into the purification step. Primary chemicals used in dissolution are nitric acid, calcium fluoride, and/or hydrofluoric acid. Filtered solids are either returned to the dissolution operation until plutonium concentrations are below the DL or sent to the vault for storage. Processed solids with plutonium concentrations below the DL are sent to solid waste packaging for disposal. Debris items are disposed after removal of plutonium contamination above the DL. Non-acidic plutonium-bearing solutions are sent to purification. Acid solutions are sent to the evaporator (References D008 and D036).

The *Advanced Testing Line for Actinide Separations* (ATLAS) facility is a technology development operation performed in the dissolution process. The mission of the ATLAS facility is to research, develop, and demonstrate state-of-the art methods to reclaim and purify actinides from contaminated scrap. The facility has the capability to recover actinides from a wide range of feed types including oxides, ash, pyrochemical salts, metal conversion residues, and other items such as metal, alloys, and sources. This line employs dissolution, feed treatment for anion exchange, eluate precipitation, purification precipitation, calcinations, and waste treatment technologies. Chemicals used in this process include aluminum nitrate, calcium fluoride, diethyl oxalate, ferrous ammonium sulfate, formamide, hydrogen peroxide, hydroxylamine nitrate, sodium hydroxide, sodium nitrite, urea, and ascorbic, formic, hydrochloric, hydrofluoric, nitric, and sulfuric acids (References C200, D071, and P190).

Purification and Oxide Conversion/Refinement consists of ion exchange, precipitation, calcination, and roasting and blending operations. The ion exchange operations use resin-filled columns to collect plutonium, which binds to the resin while impurities flow through the columns; an eluting agent (nitric acid and hydroxylamine nitrate) is then used to release purified plutonium in solution. The enriched solutions are then sent to oxalate precipitation. Calcination of the oxalate converts the plutonium to oxide form. The oxide is then screened and blended. The depleted liquids are sent to the evaporator after hydroxide precipitation. An alternative purification process involves peroxide precipitation to eliminate a select set of metallic impurities. The plutonium peroxide is then separated by filtration, redissolved in nitric acid and precipitated again

as the oxalate. The calcined plutonium oxides are sent to the vault (References C129, D008, and D036).

Americium Oxide Production begins with hydroxide precipitation of americium from the filtrate of the plutonium peroxide precipitation. The americium hydroxide then goes through dissolution, purification and packaging much like the plutonium nitrate operations, but without the refinement step. The processed material is sent to the vault for storage (References C129 and D036).

The *Evaporator* processes plutonium-poor liquids in order to re-concentrate plutonium, if possible, or to reduce the volume of liquid waste. These solutions are collected in tanks and sent to the evaporators in batches of up to 600 liters. The solution batches are then concentrated to approximately 25 liter volumes called “bottoms.” As the bottoms cool, salts (i.e., nitrate salts) precipitate out and settle on the bottom of cooling trays. After cooling, the bottoms are sent back to ion exchange if plutonium concentrations are above the DL or to cement fixation if concentrations are below the DL. Attempts are made to re-dissolve settled salts, but if this is not readily achievable, the salts are sent to dissolution if plutonium concentrations are above the DL or sent to cement fixation if concentrations are below the DL. Nitric acid is used in the evaporator to wash nitrate salts having a plutonium concentration above the DL. Spent acid waste is sent to the Radioactive Liquid Waste Treatment Facility (RLWTF). Heavy metals that might be present are concentrated in this operation (References C130, D008, and D036).

Prior to 1992, some nitrate salts below the DL were not sent to cement fixation for immobilization but were packaged as waste. These salts were washed, vacuum dried (to reduce, but not eliminate, moisture content), double- (or triple-) bagged, and placed in 55-gallon drums. These salts are being remediated/repackaged in the WCRR Facility with an inert absorbent material (e.g., zeolite, kitty litter). The minimum inert absorbent material to nitrate salts mixture ratio is 1.5 to 1 (see Section 4.4.10). Containers of nitrate salt waste mixed with inert absorbent material are included in the mixed absorbent waste stream (References C230, C231, D089, D090, D091, and P198).

The *Cement Fixation* process immobilizes aqueous and organic liquids with low plutonium concentrations and solids (e.g., evaporator bottoms, salts) from the six operational areas (e.g., nitrate operations) in cement. Historically, filtered solids and fines were also sometimes sent to cement fixation, but this is no longer done. Prior to 1988, the cement fixation process was performed throughout TA-55 using available glovebox space. Since 1988, the process has been performed in a dedicated glovebox. Liquids and solids are typically transferred to cement fixation in containers. Reagents used during this operation include cement accelerator, gypsum cement, nitric acid (pH adjustment), organic liquid emulsifier, Portland cement, silicone defoamer, sodium citrate retarder, sodium hydroxide, and phthalate and phosphate buffer solutions for pH meter calibration. The waste materials are commonly adjusted to a specific pH prior to mixing with gypsum or Portland cement. In the past, the cement was mixed in plastic bags or in various sized containers. Waste is now mixed directly into a 55-gallon drum

attached to the glovebox. Any particulate matter is added during the stirring operation. Based on the review of the AK sources, contaminants of incoming materials may include chromium, lead, mercury, silver, acetone, benzene, butanol, carbon tetrachloride, chlorobenzene, chloroform, tetrachloroethylene, methylene chloride, methanol, pyridine, and xylene. Most of the wastes generated under this operation are classified as cemented wastes; although a small amount of debris waste is also generated (References C132, C171, C200, D008, D036, D050, D077, D078, and U005).

4.4.3 Miscellaneous Operations

R&D projects involve applied techniques and methods designed to study and improve operations associated with the purification, separation, extraction, recovery, and characterization of actinides (primarily plutonium). General types of these miscellaneous operations are described below.

Actinide Chemistry R&D. Several small-scale R&D efforts utilizing analytical instrumentation, wet chemistry, and other miscellaneous laboratory techniques primarily focus on plutonium recovery. Examples of some of these efforts include:

- Fluoride sintering of plutonium oxide takes advantage of the presence of fluoride to aid the formation of a sintered mass of plutonium oxide powder at temperatures above 700°C.

- Chlorination of plutonium oxides involves oxides with tantalum chips from the former Rocky Flats Environmental Technology Site. Chlorination is used to recover plutonium from potassium chloride and sodium chloride matrices.

- Processing of molten-salt extraction (MSE) salts generated at LANL and the former Rocky Flats Environmental Technology Site.

- Recovery of plutonium from ash involving plutonium/thorium oxide mixtures.

- Processing of neptunium oxide and metal to remove the protactinium (Pa) daughter in order to use the neptunium for NDA standards.

Process outputs from these operations may be sent to the vault, aqueous recovery, or cement fixation based on the DL (References D009 and D032).

Experimental Oxide Characterization is conducted in Room 208 of PF-4 as an experiment designed to calculate the surface area and pore size distribution of a sample and to analyze the surface characteristics of the sample. Mixtures of helium and nitrogen are passed through a V-shaped cell to analyze the sample inside. With the exception of nitrogen and helium, no solvents or chemicals are used in this process. Process outputs from this operation may be sent to the vault, returned to the originating

P/S Code, transferred to aqueous recovery, or cement fixation based on the DL (References D009 and D032).

The *Analytical Chemistry Laboratory* includes all analytical techniques performed in Room 124 of the PF-4. Operations involve the analysis of plutonium and americium, RCRA metals, and trace metals. Originators provide samples, which are prepared for further analyses, such as inductively-coupled plasma (ICP) and x-ray energy spectroscopy (XES). Unused liquid samples are returned to the originator, sent to radiochemistry for counting, sent to aqueous recovery operations, cement fixation, or sent to the RLWTF (References D008, D009, and D032).

Laser Induced Breakdown Spectroscopy is a technique that uses a powerful laser beam which, when focused on a sample, vaporizes a portion of the sample and forms a plasma. The light emitted by the plasma is analyzed in an optical spectrometer and the elemental composition and concentration of the sample can be determined. The advantages of this technique include analysis without sample preparation or dilution and portability. In this operation, originators provide plutonium containing solids or solutions which are analyzed. After analysis, the remaining sample is returned to the originator (Reference D032).

Actinide Processing Demonstration is a hydrothermal processing technique that involves the reaction of aqueous/organic mixtures, pure organic liquids, or contaminated combustible solids (e.g., ion exchange resins, plastic filters, and cellulose rags) with water under supercritical or near supercritical (elevated temperature and/or pressure) conditions. Feed streams may be contaminated with acetone, butanol, carbon tetrachloride, chlorobenzene, chromium, dihexyl N, N-diethylcarbamoylmethyl phosphonate, diisopropyl benzene, lead, methanol, methylene chloride, octylphenyl di isobutyl carbamoylmethyl phosphine oxide, and xylene. Effluents are liquids, oxides, and salts. Organic components are oxidized to carbon dioxide. Nitrate contaminants are converted to nitrogen gas and some nitrous oxide. Components such as chlorine, sulfur, and phosphorus are oxidized and converted to acids or salts. Process outputs from this operation may be sent to the vault, returned to the originating P/S Code, or transferred to aqueous recovery or cement fixation (References C199, D032, D077, and M223).

Electrochemistry operations examine the electrochemical behavior of actinide or actinide contaminated metal samples and compounds in aqueous and non-aqueous solutions. A wire is attached to the sample with conductive paint and the sample is mounted in epoxy. The surface is polished and then cleaned with ethanol. An electrochemical cell is assembled, including a reference electrode (such as saturated calomel), a counter electrode, the desired solutions, and a gas dispersion tube. The electrodes are attached to a potentiostat and the sample is polarized by the application of voltage to the working electrode. The residual solution is made more basic to precipitate the actinide. After settling, the liquid is decanted and the precipitate is filtered and dried. The filtrate is sent to Aqueous Recovery or to the RLWTF. After

drying, the residue is scraped into a storage container and sent to the vault. The remaining samples are returned to the originating P/S Code (Reference C131). *Material Identification and Surveillance* involves the preparation of batches of plutonium oxide with well-established characteristics, and non-SNM impurities as desired to determine how these materials will interact with water in long-term storage. The preparation of the batches uses any combination of milling, blending, screening, calcining, and splitting to produce the desired plutonium oxide powders. Impurities such as alkaline, alkaline earth, uranium chlorides, metal oxides, hydroxides, fluorides, carbonates, nitrates, and sulfates are added as desired and the material is sent to the vault or other operations as needed (Reference C131).

Long Term Storage and Compatibility Testing is an operation used to measure the chemical and physical changes that occur when plutonium metal or compounds (such as oxides) are placed in various storage configurations, in various gaseous environments, or in contact with process or commercial materials. Small Material Inventory Studies involve the loading of up to 10 grams of plutonium dioxide as well as non-special nuclear material impurities into containers. The containers are monitored for temperature, pressure and gas composition over time. The capability also exists to modify the gas composition at any given time. The containers are heated in a furnace to a temperature corresponding to self-heating of a normal storage container loaded with nuclear material. The plutonium oxide is supplied by the vault or the Material Identification and Surveillance (MIS) process. The purpose of this process is to understand any changes or reactions that might occur in long-term storage of nuclear material. The gas monitoring is accomplished using mass spectrometry or gas chromatography. At the conclusion of testing, the containers and materials are submitted for analysis, returned to MIS, or sent to the vault (References C131 and D009).

Compatibility tests, which are no longer performed, were similar to the long term storage tests, except that (1) tests were prepared with process or commercial materials in contact with the plutonium metal or compounds and stored in the glovebox, (2) the storage containers didn't have a thermocouple, (3) the container may not have been monitored by an automated data acquisition system, and (4) the container had a volume up to 1.3 liters. Materials involved include plutonium metal, alloys or compounds, process or commercial materials (including liquid solder [gallium, indium, and tin], glycol, silicone grease, Sylgard 184, or cellular silicone), and the following gases which were used as atmospheres in the storage containers: helium, hydrogen, or the constituents of air. The test materials were sent out for analysis after the tests. Gas cylinders were attached to a manifold through a two-stage regulator and not used in the gloveboxes (References C131 and D009).

Standard Fabrication originated as Pyrochemical Matrix Studies conducted from 1986-1992 involving rod milling prior to screening. This operation had two objectives: (1) blending large batches of homogeneous plutonium oxide for pyrochemical operations, and (2) blending similar batches for dissolution in nitrate operations.

The operation changed in August 1992 when a need developed to blend oxides to provide feed material for making NDA standards. From February 1995 to the present, the operation changed again, with the objective of determining the effect of high purity oxide, salt, and metal matrices on the accuracy of NDA measurements. Operations involve crushing, pulverizing, blending, roasting, and sieving. The results are used to determine protocols for handling and processing the matrices and to correct bias measurements. The product material consists of high-purity oxide standards for use at LANL and throughout the DOE complex (References D009 and D032).

Metallography Operations characterize the microstructure of metallic or ceramic pieces and establish the quality and effectiveness of welds. Materials examined consist of plutonium and uranium carbides, nitrides, and oxides, as well as zirconium and tantalum alloys, and stainless-steel. Metal pieces (pellets) are cut with a diamond saw. Ceramic and metal pieces are subjected to grinding with standard metal grinding media (e.g., papers impregnated with silicon carbides and diamond). The materials are cleaned, polished, and etched with several different chemical compounds. The spent chemicals are sent to aqueous recovery, to the RLWTF, or mixed with absorbent. The plutonium and uranium carbides, nitrides, and oxides are returned to the vault (References D009 and D032).

Electrolytic Decontamination conducts various electrochemistry R&D experiments in Rooms 105, 106, 112, 208, 209, and 210. Electrochemistry methodologies are designed to decontaminate items, replace operations that produce large amounts of waste, or enhance chemical reactions. Process inputs are from the vault. The process involves uranium decontamination of disassembled weapon components from various sites with various levels of surface contamination with plutonium. The operation is strictly an aqueous process in which an alkaline solution is reacted with the components to precipitate uranium. A stainless-steel cathode is used; therefore, corrosion is not an issue and the electrolyte is not degraded. Significant amounts of metal could be stripped in a short period of time. The precipitated solution comprises either uranyl hydroxide or uranyl sulfate, which is then dried for mass balance. The distillate contains small amounts of uranium. Rinse water is discarded to the RLWTF. Outputs from the process are directed to the vault or cement fixation (References D009 and D032).

Waste Management Operations (P/S Code WM) is currently limited to waste generated from the TRU solid waste management operation in Room 432. This practice has been in place since the beginning of 1993. Room trash boxes from PF-4 have always been handled as low-level waste (LLW). However, when the boxes were assayed to verify contamination levels, some were determined to be TRU waste. These boxes of room trash were diverted to Room 432 for repackaging as TRU waste. From May 1987 through 1992, these boxes were tracked using P/S Code XO or X0 (Inactive or unspecified P/S material) and ultimately designated as having originated in P/S Code WM. These codes were changed to P/S Code WM after 1992 (References D009, D032, and D077).

Additional controls were placed on room trash after 1992 and continue to the present. Trash is assayed with the Multiple Energy Gamma Assay System (MEGAS). When a container is rejected because of MEGAS data, the rejected container is returned to the originator for removal of any "hot" item(s). This operation also allows greater control to prevent discarding regulated materials (e.g., RCRA constituents) in room trash. P/S Code XO indicates waste materials contaminated with RCRA constituents that are generated within specific rooms but cannot be associated with an individual P/S Code in that room. P/S Code X0 is designated for waste materials that cannot be associated with a specific room, such as a hallway, mezzanine offices, restrooms, change rooms, basement, pump rooms, and trolleys. The waste from all these areas, except the pump rooms and trolleys, would be LLW and no RCRA constituents are associated with the waste. P/S Codes XO and X0 are considered interchangeable because of the difficulty in distinguishing them on container paperwork and their inconsistent use by waste generators (References C037, D009, and D077).

Material Management Operations (P/S Codes M1, M2, MM, and M4) are used to introduce and remove items from the glovebox line. TRU waste typically associated with bag-out operations (e.g., stubs, tape) is packaged with other waste items and assigned HWNs based on the P/S Code from which the waste originated. Waste generated in the material management rooms is associated with glovebox maintenance operations. No other operations are conducted in these rooms (Reference D009).

The *Non-Confirming Drums* operation occurred from April 1989–April 1991 in Room 432. This operation was established to provide a mechanism for dealing with TRU drums that did not confirm TA-55 characterization information (e.g., recorded weight or nuclear material content). Non-confirming drums were temporarily set aside until such time as personnel could reprocess them under waste management operations to correct the non-confirming condition. After April 1991, non-confirming drums were dealt with immediately, and this operation was no longer needed (Reference D032).

Extraction/Separation Studies is no longer active, but involved the processing of actinide hydroxide cakes generated from chloride and nitrate operations. Research in this area also contributed to the development of sensors and instrumentation for online chemical analysis, and improvements in the purification operation. The R&D operations were non-routine and developmental in nature. The operations involved research, process development, small scale trouble-shooting, and occasionally preparation of various isotopes and isotopic mixtures of plutonium, uranium, americium, and neptunium (Reference D032).

Non-Aqueous Dissolution/Extraction Operations is no longer active, but involved the dissolution of actinide compounds and actinide-containing matrices in superacid media. The superacid solutions were evaporated to leave solid products that were analyzed by a variety of methods. The study of the organometallic chemistry of uranium and thorium in non-aqueous solvents consisted of a variety of small-scale organoactinide operations.

The organoactinide operations were designed to study the synthesis of new actinide compounds in non-aqueous media. These operations also examined the characterization and reaction chemistry, and considered applications to existing actinide processing technology. Other non-aqueous operations supported fundamental and applied actinide chemistry research, by preparing solvents and reagents for the synthesis of new compounds, and characterization and analysis of new chemical compounds using wet chemistry methods and analytical instrumentation (Reference D032).

Measurement/Detection Operations and Studies is no longer active, but involved the inspection of oxides and metals. Materials were retrieved from the vault, brought to the glovebox, inspected, assayed by a non-destructive method, and sampled if necessary, then repackaged and returned to the vault. Assay methods included XES, laser-based, Raman and high resolution emission spectroscopy as well as other spectroscopic techniques. In addition to elemental and isotopic analyses, other measurement studies were designed to determine the surface area and pore size distribution of a sample and to analyze its surface characteristics. These studies produced only standard glovebox waste (References C131, D009, and D032).

Halogenation Studies is no longer active, but involved the fluorination of samples containing plutonium residues. A gas flow loop was used to pass a fluorinating agent through a gas-solid reactor where plutonium in the solid residue reacted chemically to form solid plutonium tetrafluoride or gaseous plutonium hexafluoride. Gaseous plutonium hexafluoride was trapped in a cold trap, distilled, and reduced to plutonium tetrafluoride. Separation operations involving experimental chlorination operations were similar to the fluorination procedures. A gas loop was used to flow carbon tetrachloride and perchlorocarbons through a gas-solid reactor to chlorinate plutonium oxides to form recoverable plutonium compounds. These studies produced only legacy waste (References D009 and D032).

4.4.4 Special Processing Operations

Special Processing includes operations for MT 42 and R&D for MT 52 (See Table 3, Average Isotopic Content of Plutonium Material Types and Enrichments, in Section 5.4.2.2, for descriptions of plutonium material types). Because processing MT 42 is a smaller-scale version of the recovery operations used for MT 52, MT 42 processing has four main recovery steps (References D010 and D030):

- Head-end operations
- Nitrate ion exchange operations
- Chloride ion exchange operations
- Pyrochemical operations

Only head-end operations are covered here. Nitrate ion exchange operations are covered in Section 4.4.2. Chloride ion exchange operations and pyrochemical operations (Direct Oxide Reduction, Molten Salt Extraction, and Electrorefining) are covered in Section 4.4.6 (References C131, D010, and D030).

Head-end Operations includes pretreatment which may include sorting, crushing, and/or pulverizing feed materials prior to being fed into later operations. A separate pretreatment procedure is the decladding of plutonium-beryllium (Pu-Be) sources. The Pu-Be metal alloy is removed from the sources, which are then entered into the chloride line for plutonium recovery along with other materials (References D007 and D028).

The next operation is to leach or pickle items such as tools, labware, crucibles, and ash, in nitric, hydrochloric, or hydrofluoric acids to remove recoverable plutonium. Plutonium oxide is typically calcined in nitrate and chloride operations to oxidize any metallic plutonium prior to dissolution. Combustible wastes are burned and the ash sent through the rotary calciners to remove incompletely oxidized organic material (References D010 and D030).

All wastes generated by MT 52 R&D operations are replicated for MT 42, but carry different P/S Codes to differentiate and identify the radionuclide content of the waste. Outputs from Special Processing include high purity metal for casting and machining (References D010 and D030).

4.4.5 Metal Operations

The main goal of metal operations is to transform the high purity metal produced primarily by pyrochemical operations into alloyed metal shapes. On-going metal operations include metal casting, machining/metal work on various metals, extrusion, surface preparation, oxidizing, surveillance machining, accelerated aging, impact testing, fuel fabrication, assembly, recovery and extraction, physical property testing, burst testing, special recovery, thermal hydride/dehydride, research alloy preparation, and welding, and Z machine experiments (References C131, D011, D029, and D092).

Casting is a process that receives plutonium metal from pyrochemical operations or Special Processing Operations depending on material type, or from other sources. The metal is combined with other metal from different sources to produce a product metal that meets purity specifications. Specification metal is then cast as a prealloyed feed aliquot at which time gallium metal is added. It is analyzed chemically in-line to determine the proper gallium content and the metal is placed into in-line storage. Metal is pulled from in-line storage to cast into shapes. Shapes generated by this process are sent to machining, various P/S Codes for testing, plutonium standards extrusion, reduction to metal or salt stripping. Plutonium oxide byproduct is sent to aqueous recovery (References D011 and D029).

Machining involves a variety of operations on cast parts obtained from Casting. Machining operations include turning, milling, grinding, and boring. The objective of the machining operations is to bring the parts to their formal dimensional specifications. Operations within machining use dry machining techniques. Cleaning solvents were used in machining operations in the past, and still are occasionally used, although with less-hazardous substitutes. Freon TF is used to remove oil from turnings (degreasing) before they are sent to recovery. Tetrachloroethylene is used to degrease metal parts after they are machined. Machined parts are sent to assembly operations or the vault. Scrap metal and turnings are sent to salt stripping and casting for recovery/reuse (References D011 and D029).

Plutonium Standards Extrusion uses high purity metal ingots from casting or machining which are placed in an extruder. The extruder is operated to produce a metallic wire that is cut into 1 gram pieces. Each 100 gram lot of wire pieces is sealed in a stainless-steel storage container for later packaging and shipment as required. The extrusion system consists of a hydraulic press and a microprocessor controlled hydraulic pumping system including a 0.156 inch diameter extruding die. The entire operation is performed in an inert glovebox to prevent oxidation of the metal. Plutonium standards are sent to the vault for storage (Reference C131).

Plutonium Surfaces studies receive samples from other operations and characterize them by the Sievert's Equilibrium System, x-ray, and other physical examinations. These methods can determine pressure-composition-temperature curves for actinide hydride/deuteride compounds or prepare samples of these compounds. These techniques also determine structures of actinide samples and measure helium release in aged plutonium. The samples may require mounting prior to characterization. Samples are returned to the originating P/S Code or to the vault (Reference C131).

Uranium Conversion involves the oxidation of uranium metal in air or a controlled oxygen environment at temperatures up to 1,100^{o} C in a glovebox environment. The uranium pieces are usually received from the vault. The metal may be cut into pieces to fit into the crucible, which is then placed in the furnace and heated to the desired temperature in a slow flow of oxidizing gas. The oxide powder is then rod- or ball-milled to reduce particle size. It is then placed in a bottle before being removed from the glovebox line and transferred to the vault (References C131 and D011).

Surveillance Machining focuses on receiving metal shapes and machining the required metallic samples for a variety of analyses that can document what changes may or may not have occurred in the shaped item over its lifetime. The turnings are ultimately oxidized, while classified shapes and miscellaneous metal go to a variety of operations or to the vault (Reference C131).

Accelerated Aging of Plutonium is similar to casting and machining. Plutonium and other actinide based metals and materials are cast, machined, and inspected in the Actinide Research Machining Glovebox in the 300 wing of PF-4. This program employs Pu-238 to rapidly age weapons-grade plutonium, permitting accelerated self-irradiation induced changes in the material as a function of time. The Pu-238 enrichment level of weapons grade plutonium is performed at approximately 5 to 7.5 percent by weight. The Pu-238 is blended with the weapons-grade plutonium during the casting operation. Machining operations include turning, milling, grinding, and boring. Unlike machining, Freon TF is not used to degrease metal chips and turnings. However, trichloroethylene is used to clean machined parts. Machined parts are sent to metallography for testing. Plutonium scrap and turnings are sent to Casting and Salt Stripping for reuse/recovery. Oxide from casting is sent to Roasting and Blending for further processing (References C131, D011, D081, and P189).

The Impact Test Facility uses a 7-inch gas gun and a 40-millimeter (mm) powder gun. The 7-inch gun is used for Pu-238 experiments, such as heat source impact testing and impact testing of Pu-238 capsules in graphite blocks. The entire test is conducted in a tube so that the material is contained. The entire tube with contents is transferred back to NMT-9 for recovery elsewhere in PF-4. No TRU waste is generated from the 7-inch gun experiments under normal circumstances. The 40-mm gun enables the experimenter to generate data on materials in high stress environments. During the test, a projectile propelled to hypervelocity by a charge of smokeless powder, strikes an instrumented target contained within a glovebox. The target is shattered into macro and microscopic pieces during the impact and the projectile is arrested by a series of stopping plates. Target materials can range from surrogate materials to actinides. Post test, the remains of the target material, projectile, instrumentation, and stopping plates are removed as waste or are reused (References D011 and D029).

The Kolsky Bar Test Facility is a gas gun operation for physical property testing. A stainless-steel bar with plastic seals at each end is fired by gas pressure down a stainless-steel barrel that strikes a target, usually plutonium. Behind the target is another stainless-steel bar instrumented with sensors. This bar is butted against a plastic wrapped lead brick at the back of the chamber. Wastes include rags, HEPA filters, and gloves. The rags generated by this process may contain some lead/lead oxide from cleaning operations. The barrel is cleaned with a cotton swab. No solvents are used. Residual plutonium is returned to the originating P/S Code (References D011 and D029).

Fuel Fabrication entails the development of reactor fuel. Enriched uranium oxide, depleted uranium, and/or plutonium oxide is blended and mixed with graphite and stearic acid. The blended mixed oxide is then pressed into briquettes. The briquettes are heated, size reduced, and pressed into pellets. The pellets are heated/sintered and inspected. Grinding may be necessary to meet specifications. The accepted mixed oxide fuel pellets are transferred into the cladding glovebox. The cladding tube is held in a lathe while the pellets are pushed into the cladding with a pushrod. A

stainless-steel shroud tube is placed in the cladding tube prior to insertion of the pellets. A spring and end cap is placed in the open end of the cladding tube, and a tungsten inert gas (TIG) weld is made at the joint between the end cap and the cladding. Cladding, spring, and end cap are stainless-steel. Bonding of the fuel is done with either helium or sodium. Any excess sodium is reacted with Dowanol to form a stable sodium salt, which prevents metallic sodium from entering the waste streams. As a result of the current effort in mixed oxide fuel development, the issue of gallium removal becomes important. Completed fuel rods are sent to the vault for storage prior to distribution. Oxides and rejected pellets are sent to aqueous recovery or the vault (References D011 and D029).

Assembly Operations involves bringing nuclear material out of the glovebox and encapsulating it in a cold container. This outer container can be a bolted assembly or a welded assembly using electron beam, pressurized inert-gas metal arc, TIG, or laser welding techniques. No solvents are used. Wastes include aluminum foil, plastic bags, and gloves. The waste generated from this process is nearly always LLW, but some TRU waste may be generated. The assembled containers are sent to the vault for storage (References D011 and D029).

The *Advanced Recovery and Integrated Extraction System* (ARIES) is a demonstration operation, which receives and disassembles pits, plutonium hydrides and metallic plutonium, from which it produces plutonium metal or oxide powder. The product is canned for long-term storage. Wastes include plutonium-contaminated debris waste. Operation of the ARIES Electrolytic Can Decontamination System decontaminates the external surfaces of canned plutonium using an electrolytic decontamination system. An electrolyte (sodium sulfate) and water are used in the system in a recycle mode. Sodium hydroxide is used for pH control. Wastes include electrolyte and water solutions contaminated with plutonium. This liquid waste is sent either to cement fixation or to the RLWTF at TA-50. The plutonium metal and oxide powder is sent to the vault (References D011 and D029).

Physical Properties is a procedure that describes techniques for the study of physical properties of alloys, including the structural, magnetic, electronic, and metallurgical properties of actinide metals, alloys and compounds from various operations. A muffle furnace with an argon atmosphere is used for testing sample homogeneity or compatibility, and for temporary storage. Measurements include dilatometry (thermal expansion) and electrical resistivity. A Carver press is used to produce sample wires and pellets. The process takes place in Room 113, glovebox G 187. The actinide metals, alloys, and compounds are returned to the originating P/S Code (References D011 and D029).

Burst Testing involves the placement of hemi-shells on a test stand. A buffered test solution is pumped into the shell, pressurizing it until it bursts. Strain gauges monitor the deformation of the shell. The test solution is sodium tetraborate and sodium hydroxide and is filtered and reused. The solution is eventually discarded in the caustic

waste line to the RLWTF at TA-50. Strain gauges have electrical contact points that are tin-lead solder. No solvents are used. The tested hemi-shells are sent to the vault for storage (References D011 and D029).

The *Special Recovery Line* (SRL) conducts pit disassembly on pits which are contaminated with tritium. Tritium is recovered if it is above a specified activity. Separation of pit components is done using a special abrasive cut-off wheel. The pit is cut in half, and the shells are cleaned with copper wool and Freon TF. Scrap is sent to recovery or to waste management depending on whether the material is SNM or not. After the shells are cleaned with the copper wool and Freon TF, they are placed in an ultrasonic bath for cleaning using product SF-2I. Tritium-contaminated water is collected and poured over zeolite absorbent for disposal. Small-scale decontamination of tritium-contaminated plutonium and other SNM is done in the SRL furnace. The SRL furnace area consists of different sections, including metal handling, tritium removal furnace, equipment for collecting tritium liberated in furnace, and effluent treatment system. The procedure that describes the operation of the furnace and furnace gas treatment system contains no details on disposition of output materials, or post-run cleaning operations. Plutonium, uranium, and tritium are sent to the vault for storage. Plutonium metal is also sent to casting, machining, or salt stripping for reuse/recovery (References D011 and D029).

Thermal Hydride/Dehydride:

a) Plutonium Hydriding System. The plutonium hydriding process studies the reactions of plutonium alloys and other actinides with hydrogen and other gases. The process takes place in Room 114, glovebox 110, and uses no chemicals other than the gases. The plutonium alloys and actinides are returned to the originating P/S Code (Reference D029).

b) Operating the Hydride-Dehydride Systems. The hydride-dehydride operating procedure describes how to safely form plutonium hydride, and then to decompose it to plutonium metal. Three phases are involved: phase one uses hydrogen gas in large amounts and dehydriding is done in a separate reactor. Phases two and three use a closed loop, minimal hydrogen gas, and a single reactor. The process takes place in Room 114, GB 116, GB 119 and GB 154. No chemicals are used besides the gases. The plutonium metal is sent to the vault for storage (Reference D029).

Welding operations fall into two categories: encapsulation of radioactive isotopes and other welding operations. Two methods of welding are employed: a gas tungsten arc welder and an electron beam welder. Encapsulation of radioactive isotopes involves placing the isotope to be sealed into a stainless-steel capsule and subsequently welding the capsule closed. The exterior of the capsule is cleaned with Freon TF. The Freon TF is allowed to evaporate; hence no wiping of the capsule surface with rags is required. Other welding operations include welding of plutonium samples on vanadium in an argon atmosphere, brazing gold to repair platinum frits, welding titanium to repair

titanium boats, and welding of aluminum. No welding of lead occurs. Welding outside of the glovebox line is also done under this P/S Code. The welded parts are either returned to the originating P/S Code or sent to the vault for storage (Reference D029).

Z Machine Experiments:

The Z machine was developed to simulate nuclear explosions and conduct testing to ensure the viability of the nuclear weapons stockpile. The Z machine is also used to evaluate the effects of X-rays on various weapon components and materials. LANL and SNL have developed a long-term program for performing experiments on the Z machine using transuranic materials produced at TA-55. LANL requests and oversees Z machine experiments at SNL, including the Plutonium Isentropic Compression Experiments (Pu-ICE) which create conditions on a small scale similar to those experienced by matter with the detonation of nuclear weapons. The Pu-ICE containment systems used in the experiments are manufactured/machined components made up primarily of ferrous metals (97.2% by weight) and non-ferrous metals (2.4% by weight), with minor amounts of other materials such as carbon, epoxy, glass, plastic, rubber, and vacuum grease. TA-55 first fabricates the plutonium targets and loads them into the load assembly component of the containment system. The load assembly component is then shipped to SNL. The containment system consists of three parts: an ultra-fast closure valve and vent tank, an upper containment chamber, and a load assembly. SNL performs the experiment in the Z machine and temporarily stores the resulting Pu-ICE post-shot containment system in a 55-gallon drum. As part of the experiment detonators with high explosives are used; however, the high explosives are completely expended during the experiment. LANL owns the plutonium used in the Pu-ICE and maintains ownership of the associated waste (i.e., TA-55 is the waste generator). The post-shot containment systems are then shipped back to TA-55 to complete the certified characterization process and final disposition. It is estimated approximately 30 post-shot containment systems will be generated through fiscal year 2016 (References C237, C238, C239, D092, D093, and D094).

4.4.6 Pyrochemical and Chloride Operations

Pyrochemical operations include metal preparation, metal purification, and ancillary metal production operations (chloride operations and metal oxidation). Pyrochemical outputs are most often high-purity metal feed materials for metal operations (References D011 and D028).

<u>Metal preparation includes the following:</u>

In the single pass *Direct Oxide Reduction* (DOR) operation, plutonium oxide and calcium metal are reacted in molten calcium chloride ($CaCl_2$) to produce plutonium metal. The reaction is conducted in an MgO crucible. After cooling, a plutonium metal button is removed by breaking the crucible. A layer of salt above the button contains

unreacted oxide and metal shot, which is sometimes recovered by heating with addition of fresh salt plus calcium metal (Reference D028).

Multiple-Cycle Direct Oxide Reduction (MCDOR) is used to minimize the salt waste. During the MCDOR operation, the molten salt is regenerated by sparging the $CaCl_2$-CaO mixture with chlorine gas between multiple plutonium metal production runs. After approximately five cycles of metal production, the mixture is cooled and the salt and metal phases are separated. The plutonium metal is sent to casting or electrorefining. Impure plutonium metal is sent to molten salt extraction. Salts and crucibles above the DL are sent to chloride operations or the vault. Salts and crucibles below the DL are sent to solid waste packaging for disposal. Caustic solution from the chlorine off-gas scrubber is sent to chloride operations or the RLWTF (References D011 and D028).

Metal Preparation Line is no longer active, but produced plutonium metal from fluoride salts. Hydrogen fluoride gas was reacted with plutonium oxides obtained from calcination of oxalate or peroxide precipitates from the aqueous nitrate or chloride process lines. The plutonium fluoride was further reacted with calcium metal to produce plutonium metal, which could then be recovered as a small globule, or button, by breaking the crucible. This operation generated only legacy waste (References D011 and D028).

<u>Metal purification operations include the following:</u>

MSE is used to separate americium and the more reactive elements such as rare earth elements, alkali metals, and alkaline earth metals from plutonium metal (Reference D048). This operation is employed only if the americium content is greater than 1,000 parts per million (ppm). In the original operation (from 1979 to 1988), magnesium chloride ($MgCl_2$) was added to the impure plutonium metal in a eutectic mixture of sodium chloride (NaCl) and potassium chloride (KCl), contained in a MgO crucible, and heated to 750°C. The $MgCl_2$ oxidized americium to americium chloride although some plutonium was also converted to the chloride salt form. In 1988 and continuing to the present, the MSE operation uses $CaCl_2$, NaCl, KCl, and plutonium chloride ($PuCl_3$) produced by in-situ chlorination in a tantalum or MgO crucible. Ninety percent of the americium and ten percent of the plutonium are transferred from the feed metal to the salt. After cooling, the salt and metal are mechanically separated. The salts and crucibles above the DL are transferred to the vault or chloride operations. Salts and crucibles below the DL are sent to solid waste packaging for disposal. The plutonium metal is sent to electrorefining or metal oxidation. Caustic solution from the chlorine off-gas scrubber is sent to chloride operation or the RLWTF (References D011 and D028).

The *Electrorefining* (ER) operation takes impure metal from the MSE and DOR/MCDOR operations and produces high purity plutonium metal. Impure plutonium is cast as an anode, which is then placed in a MgO crucible with a salt mixture, a metal cathode

(typically tungsten), and a seeding reagent that is $MgCl_2$, NaCl, or KCl. After the anode and salt are melted, current is applied to the system, and plutonium at the anode is oxidized to plutonium ions that travel to the cathode and are reduced back to the metal state. Impurities in the original plutonium anode that are more electropositive or have a greater negative free energy of formation than plutonium (including barium and americium) dissolve and remain in the salt, while impurities more electronegative than plutonium (including cadmium, chromium, lead, and silver) remain in the anode. After cooling, the crucible is broken and the residues are physically separated from the high purity product metal. Anode heels were sent to pyroredox from 1984 to 1986. Currently, salts and crucibles above the DL are sent to chloride operations or the vault. Salts and crucibles below the DL are sent to solid waste packaging for disposal. Purified plutonium is sent to casting and the vault. Caustic solution from the chlorine off-gas scrubber is sent to chloride operation or the RLWTF (References D011 and D028).

Ingot Casting is included in the Electrorefining section of pyrochemical operations. Metal is melted in a MgO crucible to cast the ingot (References D011 and D028).

From 1987 to 1989, secondary solvent metals such as cadmium, bismuth, lead, and gallium were added to experimental studies of the ER operation (References D011 and D028).

<u>Ancillary metal production operations include the following:</u>

Chloride Operations:
The overall goal of chloride operations is to recover plutonium from scrap and residues and produce a purified plutonium oxide for conversion to metal. The feed sources have included plutonium residues from pyrochemical operations, Pu-Be neutron sources, analytical chemistry laboratory solutions, and residues from other DOE facilities. Chloride operations can be broken down into the following four steps (Reference D007):

- Pretreatment
- Dissolution
- Purification
- Hydroxide precipitation

Pretreatment for chloride operations is discussed in the *Head-end Operations* section of special operations (refer to Section 4.4.4).

Dissolution uses hydrochloric acid to leach and dissolve plutonium from salts, scrap, crucibles, residues, and various solutions, including solutions from the analytical chemistry laboratory. Enriched solutions undergo further purification and solid wastes are discarded as debris waste or sent to cement fixation in nitrate operations (refer to Section 4.4.2) (Reference D007).

Purification includes solvent extraction, ion exchange and oxalate precipitation, depending on the chemical nature of the material to be purified. Ion exchange columns are used to collect plutonium and to separate plutonium from impurities. Enriched solutions may be further treated with oxalic acid to precipitate plutonium oxalate. The resulting plutonium precipitate is sent to nitrate operations to be calcined and eventually to the vault. The liquid solution (filtrate) goes to hydroxide precipitation for further processing. Solid wastes are discarded as debris waste or sent to cement fixation for immobilization. Tetrachloroethylene, which was used in the solvent extraction process until 1992, contaminated the debris waste and the liquid waste absorbed in vermiculite (Reference D007).

Hydroxide Precipitation takes plutonium in filtrate solutions from the purification steps and precipitates it with potassium or sodium hydroxide. Heavy metals are concentrated in the plutonium-rich hydroxide cakes. The sources of heavy metals vary but may include one or more of the following: (a) feed materials that consist of or contain these metals; (b) leaching of chromium from stainless-steel equipment components; or (c) the use of silver salt (until 1994) in the measurement of chloride content. The resulting plutonium-enriched hydroxide cakes may become feed material for nitrate operations, be returned to the dissolution step for re-processing, may be sent to cement fixation for immobilization, or may be discarded as solid waste if they meet the approved DLs. Liquid meeting the TA-50 WAC is sent to the TA-50 RLWTF using the caustic waste line (Reference D007).

In *Metal Oxidation* small pieces of metal remaining on furnace or crucible surfaces are collected for conversion to the oxide phase. These metal pieces are placed in a furnace for the conversion process. The oxide is then transferred to the vault (References D011 and D028).

Salt Stripping is no longer an active operation, but the MSE and ER salts were further treated by salt stripping, oxygen sparging or carbonate oxidation, and salt distillation. The salt stripping operation treated the residue by melting and stirring the salt with calcium metal in a MgO crucible at 850°C. This treatment reduced the plutonium in the salt to metal and allowed the metal to coalesce for physical removal and recovery. After cooling, the crucible was broken and the metal physically separated and recycled to the ER operation or burned to oxide and sent back through aqueous recovery. The crucible shards were leached in hydrochloric acid, and then discarded (References D011 and D028).

Oxygen sparging and carbonate oxidation (since 1996) were used to ensure that any plutonium, americium, or metallic sodium or potassium left in the salts was converted to nonpyrophoric oxide forms (References D011 and D028). Vanadium pentoxide was used in place of carbonate to convert metals to oxide as part of the salt stripping operation from February to June 1998. Wastes that potentially contain residual vanadium pentoxide were, at one time, assigned the EPA hazardous waste code P120.

However, this assignment has been rescinded: see Sections 5.4.3.2, 6.4.3.2, 7.4.3.2, and 8.4.3.2 (Reference D028).

Salt Distillation is no longer an active process, but allowed for the recovery of plutonium oxide from the chloride salt and produced purified chloride salt for reuse (References D011 and D028).

The *Pyroredox* operation was used to recover plutonium from spent anode heels in the mid- to late 1980s. The anode heel was polished with calcium metal to remove surface oxide, and then oxidized to plutonium (III) with zinc chloride in molten KCl, forming $PuCl_3$. Elements more electropositive than zinc (including barium) were oxidized into the salt phase, and the zinc formed a metal button. The salt was then mixed with calcium metal in $CaCl_2$ to reduce the plutonium to the metal phase, as well as to reduce all elements more electronegative than calcium. The salt phase containing small amounts of the impurity barium was mechanically separated from the metal phase and discarded. The metal phase containing zinc was placed in the vault or further treated, and the plutonium eventually was routed back to ER. This operation generated only legacy waste (References D011 and D028).

The *Metal Coalescence* operation is no longer active. Metal coalescence was used for plutonium turnings to coalesce the turnings into a metal button. Calcium metal and $CaCl_2$ were added to a MgO crucible along with the turnings and melted. Salts and crucibles above the DL were sent to chloride operations for recovery. Salts and crucibles below the DL were sent to solid waste packaging for disposal. Plutonium metal was sent to ER or the vault (References C131, D011, and D028).

The *Neptunium* operation processed neptunium contaminated residues from the vault in 1993. This operation generated only legacy waste (Reference D028).

Plutonium Trichloride Preparation was accomplished by bubbling a carrier gas (such as chlorine) through carbon tetrachloride and passing the mixed gas stream through a bed of plutonium oxide at 500 - 600°C before being absorbed in a 5 - 6 molar potassium hydroxide solution. In this operation (January 1987– June 1989) the carbon tetrachloride was broken down into phosgene, carbon monoxide, and carbon dioxide gases. In June 1989 the operation switched to the use of phosgene gas as the carrier gas until the operation ended in May 1991. Feed material was high purity oxides from the vault or from other P/S Codes. The product plutonium trichloride was reduced to metal by the MSE or ER operations. This operation only generated legacy waste (Reference D028).

4.4.7 Pu-238 Operations

Heat Source Fabrication:
As described in Section 4.2.2, Pu-238 heat sources fabricated at TA-55 included the GPHS, LWRHU, and MWG sources. Current heat source production involves fuel fabrication and scrap and process residues processing. The primary P/S Code

associated with heat source fabrication operations described in this section is P1 (routine Pu-238 heat source). Pellet production and welding and decontamination operations were also part of heat source fabrication but they are no longer active (References C198 and C220).

Fuel Fabrication:
The source of all feed material for Pu-238 fuel fabrication is oxide, originating directly or indirectly from the SRS K Reactor. The feed material selected for fabrication is weighed then prepared using splitting, ball milling, slugging and screening, and granule seasoning. The material also undergoes oxygen isotopic exchange, involving the replacement of oxygen-17 and oxygen-18 with oxygen-16 by heating the feed material in a furnace (750°C). In GPHS processing prior to its inactivation and LWRHU processing, oxygen exchange is followed by heating to 1,000°C to release alpha-decay helium from the plutonium oxide crystal structure. The fuels are further heated or "seasoned" at temperatures ranging from 1,100 to 1,600°C and the resulting oxides are sent to be hot pressed into fuel pellets (References C192, C194, C212, C220, D080, and M285).

During the fuel fabrication process, analytical samples are frequently required for both Pu-238 oxide feed material and product specimens either to characterize the material or to determine whether the material meets current production specifications. The primary sampling capsules containing the oxide samples are cleaned in an ultrasonic bath with ethanol and allowed to air-dry before being placed into a secondary plastic container. Sampling tools are wiped down with cheesecloth containing ethanol (References C195 and P180).

The oxide samples are taken to perform particle size analysis. Ethylene glycol is used to suspend the Pu-238 oxide powder in a disposable polystyrene cuvette. The cuvette is sealed with a polystyrene cap coated with Duco cement. After the glue has set, the cuvette is ultrasonically cleaned in a water bath containing a high-purity soap (e.g., Alconox), is cleaned a second time in a bath of distilled water, and is wiped down with a cheesecloth pad soaked in Fantastik (nonhazardous) cleaning solution. The cuvette is then transferred to another hood for final decontamination with Fantastik-soaked cheesecloth. This process of cleaning and transferring the cuvette occurred up to 1994. From early 1994 onward, the water bath does not contain soap and Fantastik is not used because all work is performed in the same glovebox line and there is no need to decontaminate the cuvette. Before 1994, if the water was radioactively contaminated, it was discarded to the TA-50 RLWTF. Since 1994, the water has been evaporated (References C197 and M286).

Upon completion of the analysis, the ethylene glycol containing the Pu-238 oxide is poured through a coarse sieve and collected in a polyethylene bottle. When 200 - 500 milliliters of ethylene glycol has accumulated in the bottle, the contents are poured through a filter. The residue and filter paper are allowed to dry and are sent to a plutonium recovery process. The contaminated ethylene glycol is collected until a

sufficient amount is available to discard, and then it is poured onto a bed of vermiculite for absorption (References C194 and M286).

The *Scrap and Process Residues Processing* operation receives materials from the vault and various other operations, such as fuel fabrication, pellet production, calorimetry, and metallography. This is a physical process consisting of weighing, sorting, segregating, and loading into a shipping container. The product from this process either goes to the vault or feeds into calorimetry operations (References D080 and M285).

The *Metallography* process began in 1992 and is still active. It receives feed material from P/S Code P1 operations in the form of Pu-238 oxide fuel recovered from encapsulated heat sources, impacted heat sources, fuel pellets, or other sources. The metallography process is a physical process involving cutting, mounting, grinding, polishing, photography, and etching of Pu-238 fuel specimens (References C194 and M287).

An epoxy-based mounting resin, hardener, and mount filler is used to mount the Pu-238 oxide. The epoxy resin, hardener, and mount filler consist of diethylenetriamine, Epon Resin 8132 (nonhazardous), and a Citofix/Durofix liquid (nonhazardous). Epon Resin 8132 is a liquid that polymerizes when mixed with an amine (e.g., diethylenetriamine). The Citofix/Durofix liquid is also a polymer. One end of a phenolic ring is covered with aluminum tape. The Pu-238 oxide sample is placed in the center of the interior surface of the tape. The mixture of epoxy resin, hardener, and filler is poured into the mount ring. The mounted sample is placed in a small aluminum film can, which is placed in a pressure bomb. The bomb is pressurized for a minimum of ten hours, vented, and the sample is removed. The mounted Pu-238 oxide sample then undergoes grinding and polishing (References C197 and P181).

Manual grinding and polishing involves moving the mounted sample across wet silicon carbide grinding papers of varying grits that are laid over a glass plate. Between each grinding step and after the last grinding step, the sample is ultrasonically cleaned in distilled water. The mounted sample is polished using aqueous suspensions of aluminum oxide or diamond powder. After polishing, the sample is cleaned in distilled water. Automated grinding and polishing involves using programmable equipment. The grinding process uses a metal or cloth plate that has been coated with an abrasive slurry. This process also involves cleaning the polished sample in distilled water (Reference P181).

Whenever there is a requirement to examine and/or document the Pu-238 oxide grain boundaries, the surface of the polished sample is etched using a solution consisting of hydrobromic, hydrochloric, and hydrofluoric acids. The sample is rinsed with distilled water and allowed to dry (Reference P181).

Residues from the metallography process feed into the P/S Code P1 process. Before 1994, the Pu-238 oxide was physically removed from the plastic mount (no solvent or chemical was used), and the mount was bagged out with other plastic debris. The Pu-238 oxide sample removed from the mount was sent to the P1 scrap and process residue processing operation for plutonium recovery. However, since 1994, the Pu-238 oxide has been left on the mount and archived (stored) in the glovebox line (References C197 and M287).

The waste generated from the metallography process includes aluminum tape, grinding papers and polishing cloths, aqueous abrasive slurries, acid etching solutions, and aqueous washing and cleaning solutions. The grinding papers and polishing cloths are dried and discarded as debris waste, as is the aluminum tape. The aqueous abrasive slurries are feed material for the Pu-238 waste solidification process. Any etching solution remaining on the Pu-238 oxide sample is rinsed off using distilled water and is collected with the aqueous wash solutions. These solutions are also sent to the waste solidification process (Reference P181).

The *Routine Pu-238 Waste Solidification* process of precipitating Pu-238 in waste solutions (P/S R8) has been conducted since 1979 and is still active. The feed material for this process comes from analytical operations, Pu-238 heat source fabrication operations, metallography operations, and other LANL groups. The feed solutions are strongly acidic, contain heavy metals, and have Pu-238 concentrations that are orders of magnitude above the DL for radioactive waste solutions. The solidification process uses sodium hydroxide, ferric nitrate, and phenolphthalein in ethanol to precipitate the Pu-238 (References C194, C196, M293, and P182).

Ferric nitrate solids are dissolved into the feed solutions to act as a flocculent. Concentrated sodium hydroxide solution is then added to convert the acidic solutions into caustic solutions, and cause the ferric ions and the Pu-238 ions in the solutions to co-precipitate as hydroxides. Phenolphthalein solution is used to indicate when the solution is basic. After sedimentation and vacuum filtration, the liquid portion (filtrate) is sampled and alpha-assayed to determine the residual Pu-238 concentration. The sludge is heated (calcined) to oxidize the hydroxides for disposal. This procedure is repeated as necessary for the filtrate until the Pu-238 concentration in the filtrate is below the DL (References P155 and P182).

The waste generated by this process consists of calcined ferric oxide solids containing Pu-238, a caustic solution containing Pu-238 below the DL, and solid debris. The oxide solids are sent to the vault or disposed as waste, depending on the Pu-238 concentration. Waste containers that are predominantly debris may contain small quantities of the oxide solids. The caustic solution is discarded into the caustic drain to the pretreatment plant at the RLWTF (TA-50, Building 1, Room 60) (References P155 and P182).

Aqueous Scrap Processing involves the purification of Pu-238 oxide in a nitric acid stream, similar to the recovery operations already established for Pu-239 as part of TA-55 nitrate operations (Reference C210).

During comminution, the weighed Pu-238 solid is ground to a particle size less than five microns. After the comminution, all or a portion of the ground material is put into a dissolution vessel. The Pu-238 solid is dissolved in a mixture of refluxing concentrated nitric acid and hydrofluoric acid for up to eight hours. After dissolution is performed, the Pu-238-rich solution is filtered through a five micron Teflon membrane. A portion of the filtrate may be processed through ion exchange, or the entire filtrate may be treated for oxalate precipitation (References C210 and D080).

Oxalate precipitation involves an acid adjustment of the filtrate with nitric acid while the solution is continuously stirred using the mechanical stir bar. Urea is added to scavenge nitrite salt that could interfere with further chemical pretreatment. Hydroxylamine nitrate is added to adjust the valence of the plutonium to (III). Oxalic acid is added to form a plutonium-oxalate precipitate. The precipitate is filtered, and calcination converts the Pu-238 oxalate to Pu-238 oxide product. The solid product is cooled, weighed, and stored (Reference D080).

The dissolution Pu-238 filtrate destined for ion exchange may undergo an aluminum nitrate treatment. The dissolution Pu-238-filtrate is added to aluminum nitrate dissolved in dilute nitric acid, followed by a filtration step to collect any formed solids (typically, the aluminum nitrate treatment is not performed). The filtrate then undergoes a pretreatment involving urea, sodium nitrite, and ferric salt prior to ion exchange. The plutonium-rich eluate is collected and undergoes oxalate precipitation as described above. The plutonium-lean effluent, which contains impurity metal ions, as well as the aluminum from the aluminum nitrate treatment, is neutralized to pH 10-12 with sodium hydroxide. Under these neutralization conditions, the majority of the impurity ions and Pu-238 (not precipitated as an oxalate precipitate) will precipitate as metal hydroxides (References C210, C213, D079, and D080).

The hydroxide precipitate is calcined then stored, and the hydroxide filtrate is sampled to determine the radioactivity level. Waste containers that are predominantly debris may contain small quantities of the metal hydroxides. If above the DL, the hydroxide filtrates are transferred to the residue solidification process. In this process, soluble Pu-238 is recovered with ferric nitrate and sodium hydroxide, and the filtrate resulting from the solidification process is sent to the TA-50 RLWTF through the caustic waste line. The Pu-238 in the hydroxide filtrates can also be recovered by an ultrafiltration/polymer filtration process operated by NMT-11 personnel. The Pu-238 oxide product is sent to P/S Code P1. The hydroxide cakes are stored either in the vault or in the glovebox line under P/S Codes MM for disposal or ASP for recovery (References C210 and D080).

Induction Heating and Levitation is a technique used to achieve minimal contamination of conductive material. This technique uses Pu-238 metal from various operations and produces small quantities of uncontaminated metal by suspending and then melting the material inside of an induction coil with induction heating. Once the material has melted, the power is shut off, and the molten mass can be dropped or forced into a mold for forming. This process was designed to drive off impurities from the metal by melting it in a vacuum and not reintroducing impurities from a container during the time the material is in the molten state. The purified Pu-238 metal is sent to the vault (References C220 and M306).

Pu-238 Direct Oxide Reduction was an activity that was performed in October 1998 and October 1999 to produce Pu-238 metal for the accelerated plutonium aging program. There are no current plans to perform this operation again, but the code is still active. In this process, plutonium oxide and calcium metal are reacted in molten calcium chloride to produce plutonium metal. The reaction is conducted in a MgO crucible at 820° to 875°C. The reaction proceeds to completion when excess calcium is present and when sufficient calcium chloride is available to dissolve the calcium oxide product. After cooling, a plutonium metal button is removed by breaking the crucible. The salts are exposed to air to oxidize pyrophoric metals that might be present. The salt is then either routed through aqueous recovery operations to recover the plutonium or discarded as waste with the crucible pieces. The plutonium button is sent to the vault (References C211, C221, D080, and P189).

Traditionally, the *Thermal Decomposition of Cellulose* process incinerated organic-based materials contaminated with plutonium to ash to reduce the volume of waste generated or to recover the plutonium using a nitrate dissolution process. Due to increasingly stringent regulations governing the combustion products associated with incineration, the incinerator process was modified to thermally decompose organic-based materials in an argon atmosphere in 1995. The thermal decomposition unit is also referenced in nitrate operations. It consists of a pyrolysis or passivation chamber, a caustic scrubber (potassium hydroxide) unit, and vacuum system. Organic-based materials designated for passivation have been limited to rags (cheesecloth) contaminated with nitric acid solution (References C200, D071, M299, and P156).

During processing, oil contaminated rags are separated from nitrated rags. The nitrated rags are moistened with water to reduce reactivity and excess water is removed using a filtration screen. The rags are then combined, placed in a furnace can, and reduced to ash in an argon atmosphere in the furnace. The ash, rinse water, filter residues, and caustic solution are further processed to recover the plutonium, if these materials are determined to exceed the DL. These materials are sent for disposal, if below the DL. Liquid waste below the DL is sent to the RLWTF at TA-50 (References C200, D071, M299, and P156,).

The *Routine Scrap Processing*, which operated from 1988 to 1996, received Pu-238 feed materials (Pu-238 oxide) from calorimetry operations, heat source operations (P/S Codes P1 and GPHS), and the vault. The scrap processing operation involved opening, weighing, sorting, and segregating the Pu-238 oxide that arrived in a stainless-steel inner shipping container (EP-60). The Pu-238 oxide was then transferred into an outer shipping container (EP-61) and sent to the calorimetry process, and then to the vault (References C194, M288, and M289).

The *Recovery of Pu-238 Oxide from Contaminated Iridium* process occurred from 1990 to 1992. The feed material for this process came from metal items in the iridium inventory in PF-4 or in the CMR Facility at TA-3. This process used both molten magnesium chloride and electrochemical dissolution to remove Pu-238 from iridium (References M290 and M291).

The first step in this process involved immersing the Pu-238 oxide-contaminated iridium metal in molten magnesium chloride. The magnesium chloride was melted in a MgO crucible. The same salt was used for subsequent runs until it had lost its effectiveness. The iridium shells were placed into a tantalum basket and immersed in the molten salt. At the end of the treatment, the iridium metal was removed from the salt and the salt coating on the metal was removed with a water wash. This water wash was sent to the Pu-238 solidification process. The spent salt and crucibles were bagged out and assayed before being discarded as Pu-238 contaminated TRU solid waste. The iridium metal was sent to the vault unless additional treatment was necessary (References C194 and C197).

If further treatment was required, the iridium metal underwent electrochemical dissolution. The electrolyte solution consisted of a dilute mineral acid (nitric acid, hydrochloric acid, or sulfuric acid) with optional salt. The iridium metal was immersed in the solution, and a current was passed between the iridium metal and a graphite reference electrode. At the end of the run, the iridium metal was washed with water and allowed to dry. The clean iridium metal was sent to the vault. The spent electrolyte solution, which was acidic and contaminated with small amounts of iridium and Pu-238, and the water wash were sent to the Pu-238 solidification process (References C197, M290, and M292).

The *Recovery of Pu-238 from Sucrose Solutions* occurred from 1979 to 1988. The feed material for this process consisted of a 35 percent sucrose solution composed of sodium pyrophosphate, water, and sucrose. Sucrose solutions were used as a dispersive medium in particle size analysis of Pu-238 oxide; therefore, the feed solutions contained recoverable amounts of Pu-238 oxide (References D080 and M294).

The Pu-238 was recovered from these sucrose suspensions by filtering out the Pu-238 oxide in a ceramic filter boat and evaporating the solution to dryness over low heat. The Pu-238 oxide residue was scraped off the filter paper and calcined, then sent

off-site for reprocessing. The residue from the evaporated solution was calcined and sent for discard if the Pu-238 content was below the DL (References D080 and M294).

The *Pellet Production* process is no longer active. The original feed material for the pellet production process consisted of Pu-238 oxide from fuel fabrication. This material underwent the physical operations of screening and weighing, die loading, hot pressing, sintering, and dimensioning. The product was sent to the vault and any residues were sent to the scrap and process residues processing operation (References C220, D074, D080, and M285).

The *Welding and Decontamination* process is no longer active. Heat source capsules were welded and a solution of nitric and hydrofluoric acid was used for decontaminating the fuel clads. The clad heat sources were immersed in the solution a minimum of three times to allow the acids to dissolve any plutonium oxide particles on the clad surface. Each time, the heat sources were removed from the acid solution and placed on a rag dampened with water. A rubbing action removed contamination while the heat of the source caused the acid solution and water on the rag to evaporate at a fairly rapid rate. The TRU acid solutions generated by the decontamination steps were neutralized to precipitate plutonium, and the filtrate was discarded into the caustic waste line to the RLWTF at TA-50. The plutonium precipitate was discarded if it met the DL. The only other process chemical, UCAR C-34, was an epoxy for sealing the graphite aeroshell of the LWRHU heat source assembly. The epoxy was not RCRA-regulated (References C220, D080, and M284).

The *Material Reclamation* process is no longer active. The process was used to remove specially identified Pu-238/beryllium (Be) neutron source material from its packaging and place it into packaging authorized for shipment to the WIPP. Waste disposal was chosen over reclaiming the source material because there was no capability for purifying and reclaiming the Pu-238. This process involved the disassembly of source materials retrieved from the vault, crushing and sieving the source material, and packaging the products and byproducts as waste. The original packaging was also disposed of as waste (References C156, D060, and P170).

4.4.8 Facility and Equipment Maintenance Operations

Facility and equipment maintenance operations conducted in TA-55 involve cleaning and decontamination, equipment inspection and replacement, modification and repair of facilities, and general housekeeping. Cleaning and decontamination operations include physical wiping and the use of cleaning solutions (e.g., Fantastik, water) to remove potential contamination and to restore work areas and equipment to their original condition. Paper, plastic, and rags with a cleaning solution are used to remove or contain the spread of contamination. Equipment inspection, calibration, and replacement operations are performed to ensure continued operability and process efficiency. Solid wastes generated from these operations may include paper and plastic wastes, glass, small equipment (e.g., labware, motors, pumps), and small tools.

Modification of facilities include plumbing; electrical fixtures and equipment installation; and installation or removal of gloveboxes, ventilation ductwork, and windows. General housekeeping includes cleaning, repair, and organization of the facility/infrastructure. Solid wastes generated from these operations may include HEPA filters, glass, glovebox gloves, paper, plastic, and rags. Solid waste generated from these operations is disposed of as TRU or LLW waste. General facility maintenance solutions (e.g., wet vacuum water, mop water) are sent to the evaporator or the RLWTF (References D002, D008, D009, D011, D013, D014, D017, D023, D024, D026, D032, D045, M011, P001, P102, and P155).

4.4.9 Decontamination and Decommissioning (D&D) Operations

D&D operations are commonly performed at PF-4 in TA-55 to reduce the amount of floor space posted as radiological controlled areas and to support upgrades to existing facilities and equipment. These efforts assist in contamination control and result in a decrease in the amount of radiological waste generated at TA-55. These radiological controlled areas house the equipment and material used to perform the above listed operations and the waste generated during D&D operations contain the same chemical and radiological contaminants. No hazardous chemicals are added to the waste during the D&D operations. Commercially available, non-hazardous cleaning products, such as Fantastik, are used to remove loose contaminants. The goal of the D&D is to reduce the amount of TRU waste generated as much as possible through decontamination and size reduction (References D002, D013, D014, D026, D034, and D041).

Decontamination operations are used to accomplish several goals, such as reducing occupational exposures, limiting potential releases of radioactive materials, permitting the reuse of components, and reducing the amount of TRU waste generated. Decontamination operations included the use of mechanical and chemical cleaning techniques such as brushing, stripping, washing, and wiping to remove contamination. In addition, physical isolation and draining of equipment are performed when necessary. Based on the radiological contamination, drained liquids are either further treated or solidified. Decommissioning operations included the physical removal of contaminated gloveboxes, equipment, machinery, furnishings, and support systems. This included the removal and size reduction of glovebox internals, process piping and supports, tanks and ancillary equipment, and other fixed equipment such as ducting, wires, conduits, electrical panels, and cabinets. Gloveboxes and equipment are size reduced as necessary and packaged for disposal. Size reduction operations are sometimes performed in other facilities as discussed below in the repackaging and prohibited item disposition section. Secondary waste such as combustibles, metal, and plastic generated during D&D is expected to be part of the waste. D&D operations also included the removal of stored radiological and hazardous materials and other related actions (References D002, D013, D014, D026, D034, and D041).

4.4.10 Waste Repackaging and Prohibited Item Disposition

Waste repackaging and prohibited item disposition can be performed in four facilities outside of TA-55. Containers that fail to meet WIPP criteria are sent to these facilities to be safely remediated. The first facility was established in 1979 at TA-50 as the SRF to size-reduce non-routine items such as decommissioned gloveboxes, ductwork, and process equipment to fit in 55-gallon drums or standard waste box (SWBs). A plasma torch was commonly used during size reduction operations to cut up these large items into manageable pieces. The SRF historically combined waste from multiple facilities and these containers will be identified and characterized under a separate TA-50 waste stream. As LANL TRU waste characterization and certification activities increased, the mission of the SRF was expanded to include various operations to support TRU waste characterization. In 1993, the name of the SRF was changed to the WCRR Facility to reflect the expanded remediation and repackaging mission. Size reduction operations at the WCRR Facility were discontinued around 1997. Recently, the WCRR Facility has started remediating/repackaging nitrate salt waste with an inert absorbent material (e.g., zeolite, kitty litter). The minimum inert absorbent material to nitrate salts mixture ratio is 1.5 to 1. The second repackaging facility, the TA-54 Building 412 facility, operated for a short time in the early 2000s and resumed operations again in 2010. The third facility, the TA-54 Dome 231 Permacon, was established in 2006 at which time CCP personnel began observing operations. The fourth facility, the Box Line Process, began operations in 2012 at the TA-54 Dome 375. All three TA-54 facilities perform the same basic functions including sorting, segregating, size reduction, and repackaging operations on waste containers (e.g., 55-gallon drums) that contain WIPP nonconforming items. The facilities also safely process oversized containers (e.g., FRPs, CMBs). They disassemble oversized containers (e.g., FRPs), process waste items located within, size reduce waste items (if necessary), and process the original packaging (e.g., plywood sheathing). They then repackage these wastes in standard containers (e.g., 55-gallon drums, SWBs) that can be permanently disposed of at the appropriate disposal facilities. These facilities also process (i.e., modify and vent) CMBs in order to load them into ten drum overpacks (TDOPs). Modification of the CMBs includes cutting the edges of the box so it will fit into a TDOP. The original packaging materials (e.g., plywood sheathing) will be managed as either TRU or LLW waste(References C163, C165, C185, D013, D026, D041, D062, D089, D090, D091, P154, P158, P159, P192, P194, P195, P196, P197, P198, P199, P203, and P204).

These facilities are used to perform VE, repackaging, and prohibited item dispositioning of TRU waste. VE is performed to provide information that is used to 1) confirm the waste stream delineation by AK, 2) ensure the absence of prohibited items, and 3) characterize retrievably stored waste with inadequate AK, in lieu of RTR. Waste containers with prohibited items are segregated then dispositioned appropriately and/or repackaged into new containers, during which time liquids are absorbed, sealed containers greater than four liters are opened, and other items (e.g., unpunctured aerosol cans) are removed and segregated if necessary prior to certification and shipment. Waste items with high dose rates may be repackaged into a pipe overpack

container (POC). Current repackaging procedures ensure that waste items placed into a new container originate from a single parent container. Therefore, if repackaging is necessary the original TA-55 characterization is retained. Some secondary waste generated during remediation and repackaging operations may be added to the waste containers, including but not limited to: absorbent (e.g., Waste Lock 770), alkaline batteries, Fantastik bottles used during decontamination, miscellaneous hand tools, paper/plastic tags and labels, plastic/metal wire ties, PPE, plastic sheeting used for contamination control, rags and wipes (Kimwipes), and original packaging material (e.g., metal, plastic bags, plywood sheathing, rigid liner lids cut into pieces). Although these operations are performed outside of TA-55, there is no cross contamination with waste from other LANL facilities for the containers covered in this report (References C150, C177, M316, P154, P158, P159, P192, P194, P195, P196, P197, P198, P199, and P203).

4.4.11 Below-Grade Retrieval Project

Since 1970, TRU waste generated by LANL has been retrievably stored at TA-54, Area G in anticipation of disposal at WIPP. Some of this waste, generated between 1970 and 1998, has been stored below ground. The below ground TRU storage includes a trench containing corrugated metal pipes, Pit 9, four trenches (A–D), and remote-handled (RH) shafts. Based on a review of available AK, only Pit 9 and Trenches A–D contain CH waste from TA-55. LANL has established the Legacy Waste Disposition (LWD) Project to ensure the safe retrieval of containerized TRU waste from below ground storage (References D063, D064, and D067).

Pit 9 was excavated in the spring of 1974 and completed for use in November of 1974. Pit 9 is located in the central portion of TA-54, Area G. Pit 9 is approximately 400 feet long, 20 feet deep, and 30 feet wide. The south end was excavated to an almost vertical slope while the north end has a 6 to 1 slope for access to the pit. The pit was used for retrievable storage of 30-, 55-, and 85-gallon drums, crates, and FRPs containing TRU waste. The primary mission of the Pit 9 LWD Project is to retrieve and relocate 4,082 waste packages containing TRU waste into an inspectable storage configuration (References D063, D064, D065, D066, and M280).

Trenches A–D received TRU waste between 1974 and 1985 for storage until it could be disposed of at WIPP. Trenches A–D were excavated to different dimensions based upon the quantity of waste to be stored and the trench proximity to adjacent disposal pits. Placement of waste into Trench A occurred between March 1974 and October 1974. Trench B was active between April 1976 and April 1977. Waste placement in Trench C began in April 1977 and ended in September 1981. Trench D was active between September 1981 and December 1985. The TRU waste stored in the trenches consists of 30-gallon containers placed inside concrete casks (References D067, D068, M281, and P174).

The primary mission of the LWD Project at TA-54, Area G is to retrieve, characterize, repackage, as necessary, and dispose of below-grade TRU waste. Retrieval operations typically include workspace setup, removal of below ground storage material (e.g., soil, plastic, plywood), inspection of waste containers to be removed (i.e., evaluation of container integrity), radiological survey of the containers, physical removal of the containers using various mechanical means, and workspace cleanup. Retrieved containers that are intact may be washed with water and detergent to remove soil or contamination if found. The wash water is treated separately from the containerized waste. Depending on the type and condition of the retrieved container further repackaging or processing may be required. For instance, drums with integrity or prohibited item (e.g., liquids) issues may be repackaged or overpacked (i.e., 30-gallon drum placed into a 55-gallon drum) in the facilities/operations described in Section 4.4.10. The eventual number of 55-gallon drum equivalents generated will be dependent on the radiological characteristics of the waste containers, and the condition of the retrievably stored below-grade containers. Materials used during retrieval operations that may contaminate the waste include plastic sheeting, bags, and PPE (References C178, D063, D064, D067, and P174).

4.5 Waste Certification Procedures

TRU mixed waste in waste streams LA-MHD01.001, LA-CIN01.001, LA-MIN02-V.001, and LA-MIN04-S.001 will be certified in accordance with CCP-PO-001 (Reference 7).

5.0 REQUIRED WASTE STREAM INFORMATION: LA-MHD01.001

This section presents the mandatory waste stream AK required by the WIPP-WAP (Reference 1). Attachment 1 of procedure CCP-TP-005 (Reference 8) provides a list of the TRU waste stream information required to be developed as part of the AK record.

5.1 Area and Building of Generation

All of the debris waste covered by this AK Summary Report originated from TA-55 R&D/fabrication and associated recovery, facility and equipment maintenance, D&D, waste repackaging, and below-grade retrieval operations described in Section 4.4. Container-specific records are reviewed for each container to verify the physical composition and origin of the waste stream inventory (References M019, M156, M215, M216, M217, M218, M219, M222, M224, M226, M238, M273, M274, M275, M276, M296, and M298).

5.2 Waste Stream Volume and Period of Generation

Waste stream LA-MHD01.001 is mixed heterogeneous debris generated from 1978 to present. Although plutonium operations commenced in 1979, material has been located in TA-55 since 1978. Table 1, LA-MHD01.001 Approximate Waste Stream Volume, summarizes the volume of this waste stream. Of the 16,591containers in this waste stream, 713 are presently in below-grade retrievable storage at TA-54, Area G. The projected volume of retrievably stored below-grade containers may change based on the radiological characteristics and the condition of the containers. The future projected generation of heterogeneous debris waste from fiscal year 2014 through fiscal year 2016 is approximately 2,400 55-gallon drums (504 cubic meters). There is no projected end date for the termination of operations that generate this waste stream (References C152, C153, C175, C179, C219, C225, C232, C233, C240, D025, D041, M156, M241, and M298).

Table 1. LA-MHD01.001 Approximate Waste Stream Volume

Containers	Volume (cubic meters)
174 30-gallon drum	19.76
15,420 55-gallon drums (includes POCs)	3,238.2
600 85-gallon drums	192
3 110-gallon drums	1.25
308 SWBs	579.04
86 Other Containers	490.2
16,591Total	4,520.45

5.3 Waste Generating Activities

Wastes are generated from materials used during TA-55 R&D/fabrication and associated recovery, facility and equipment maintenance, D&D, waste repackaging, and below-grade retrieval operations described in detail in Section 4.4 and include (References D025 and D041):

- Preparing ultra-pure plutonium metals, alloys, and compounds
- Preparing (on a large scale) specific alloys, including casting and machining these materials into specific shapes
- Determining high-temperature thermodynamic properties of plutonium
- Reclaiming plutonium from scrap and residues produced by numerous feed sources
- Disassembling components for inspection and analysis
- Manufacturing of parts on a limited basis
- Processing mixtures of plutonium and uranium oxides for reactor fuels
- Pu-238 generator and heat source R&D, fabrication, testing, and recycling

5.4 Type of Wastes Generated

This section describes the process inputs, Waste Matrix Code assignment, WMPs, radionuclide contaminants, and RCRA hazardous waste determinations for waste stream LA-MHD01.001. The waste stream is characterized based on knowledge of the

materials, knowledge of the operations generating the waste, and physical descriptions of the waste.

5.4.1 Material Input Related to Physical Form

Waste stream LA-MHD01.001 consists of mixed heterogeneous debris waste generated in TA-55. The debris waste includes paper, rags, plastic, rubber, wood based HEPA filters, other plastic based and cellulose based items (e.g., PPE), noncombustible (e.g., metal and glass), and lesser quantities of homogeneous solids (less than 50 percent by volume) contaminated with nuclear materials (e.g., americium oxide). Plastic-based waste includes (but may not be limited to): bottles, dry-box gloves (unleaded neoprene base), gloves including leaded gloves, ion-exchange resins, Plexiglas, polyethylene and vinyl, polystyrene, polyvinyl chloride plastic, tape, Tygon tubing, and vials. Rubber- and Teflon-based waste includes rubber gloves, Teflon tape, gaskets, and stoppers. Cellulose-based waste includes (but may not be limited to): booties, cardboard, cotton gloves, coveralls, laboratory coats, paper, rags, wood, and similar materials. Noncombustible debris waste includes (but may not be limited to): bottles (e.g., glass), cans (e.g., steel and brass), composite HEPA filters, crucibles, equipment (e.g., furnaces, foundry parts, machine tools and parts), fluorescent bulbs, glass, gloveboxes, glovebox windows, graphite, lead (e.g., shielding), metal pipes, miscellaneous labware, metal (e.g., beryllium), motors, pumps, slag, small tools, and ventilation ductwork. Homogeneous solid waste (less than 50 percent by volume) includes: hydroxide cake/filter materials, salts, and ash residues. Hydroxide cake/filter materials are composed of precipitated materials such as americium cadmium, calcium, chromium, iron, lead, magnesium, mercury, neptunium, plutonium potassium, silver, sodium hydroxide, thorium, and uranium. Salt waste can include varying mixtures of calcium chloride, cesium chloride, lithium chloride, magnesium chloride, potassium chloride, sodium chloride, zinc chloride, residual entrained calcium and zinc metal, and various plutonium and americium compounds. Ash residues originate from the thermal reduction of organic-based waste products that were contaminated with plutonium (e.g., plastics, rubber, wood, cellulosics, and oils) and may include incomplete combustion products such as small pieces of plastic and metal debris items. The waste stream also includes a small fraction liquids (e.g., waste oils and organics) and solids (e.g., nitrate salts) absorbed or mixed with absorbent materials which may include Ascarite II, (sodium hydroxide coated silicate), diatomaceous earth (silica and quartz), kitty litter (clay), vermiculite (hydrated magnesium-aluminum-iron silicate), and/or zeolite (aluminosilicate mineral). Finally, some secondary waste generated during remediation/repackaging operations may be added to the waste containers, including but not limited to: absorbent (e.g., Waste Lock 770 [sodium polyacrylate]), alkaline batteries, Fantastik bottles used during decontamination, miscellaneous hand tools, paper/plastic tags and labels, plastic/metal wire ties, PPE, plastic sheeting used for contamination control, rags and wipes (Kimwipes), and original packaging material (e.g., metal, plastic bags, plywood sheathing, rigid liner lids cut into pieces) (References C150, C176, C177, D025, D041, D083, D084, M019, M215, M216, M217, M218, M219, M222, M316, and P178).

5.4.1.1 Waste Matrix Code

Based on the evaluation of the materials contained in this waste stream and LANL waste management practices, this waste stream is comprised of greater than 50 percent by volume heterogeneous inorganic and organic debris such as metal, glass, graphite, plastic, cellulosic materials, rubber, and filters. Therefore, Waste Matrix Code S5400, Heterogeneous Debris, is assigned to waste stream LA-MHD01.001. Although the waste stream, as a whole, is comprised of more than 50 percent by volume heterogeneous debris, any container may include nearly any percentage of the WMPs listed in Section 5.4.1.2. However, containers including greater than 50 percent by volume homogeneous solids (e.g., hydroxide cake/filter materials, salts, and ash residues) will be excluded from this waste stream (References 2, D025, D041, D083, D084, DR001, DR005, M019, M156, M157, M158, M215, M216, M217, M218, M219, M222, M224, M226, M238, M273, M274, M275, M276, M296, and M298).

5.4.1.2 Waste Material Parameters

To estimate the WMPs for waste stream LA-MHD01.001, WMP data were obtained from the Waste Data System (WDS), formerly known as the WIPP Waste Information System (WWIS) database, as of October 3, 2006. The WMP data were derived from RTR and VE of this waste stream by the CCP TRU Waste Certification Program (TWCP) at LANL for this waste stream. In cases where WDS data included both RTR and VE data for the same container, only the VE data was included in this assessment.

The WMPs for waste stream LA-MHD01.001 were estimated by reviewing the WDS waste container inventory records for 1,917 containers. The WDS data provides a weight for packaged waste materials, which were categorized into one or more of the following WMPs: iron based metals/alloys, aluminum based metals/alloys, other metals/alloys, other inorganic materials, cellulosics, rubber, plastics, and inorganic matrix. The 1,917 containers included in the evaluation represent approximately 14 percent of the current waste stream (Reference C179). The waste generation date range for containers included in the evaluation is from December 1979 to June 2004, compared to the generation date range for this waste stream of November 1979 to present. Therefore, it is assumed that the WMP data for the 1,917 containers are representative of waste stream LA-MHD01.001 as a whole. Average, minimum, and maximum WMP weight percentages were calculated using the WDS data, and the results of this analysis are presented in Table 2, Waste Material Parameter Estimates for LA-MHD01.001.

The statistical analysis of the data is documented in a memorandum (included with Attachment 6) as required by CCP-TP-005 (Reference 8).

Table 2. Waste Material Parameter Estimates for LA-MHD01.001

WMP Description	Average Weight Percent	Weight Percent Range
Iron-based Metals/Alloys	42.05%	0.00% - 100.00%
Aluminum-based Metals/Alloys	0.17%	0.00% - 77.51%
Other Metals	5.04%	0.00% - 91.45%
Other Inorganic Materials	27.27%	0.00% - 100.00%
Cellulosics	3.48%	0.00% - 95.86%
Rubber	5.22%	0.00% - 98.67%
Plastics (waste materials)	16.10%	0.00% - 100.00%
Organic Matrix	0.00%	0.00% - 0.00%
Inorganic Matrix	0.67%	0.00% - 72.48%
Soils/Gravel	0.00%	0.00% - 0.00%
Total Inorganic Waste Average	**75.20%**	
Total Organic Waste Average	**24.80%**	

5.4.2 Radiological Characterization

5.4.2.1 Pu-238, Pu-239, Pu-240, Pu-241, and Pu-242

The primary plutonium material type inputs for the plutonium recovery process are listed in Table 3. However, other MTs are occasionally introduced as feed material. The assignment of MTs is used to describe the isotopic composition of common blends of radioactive materials used within the DOE complex (References C186, C194, C209, C219, C222, D025, D073, D074, D076, D080, D083, M019, M156, M159, M215, M216, M217, M218, M219, M222, M238, M273, M274, M275, M276, M283, M295, and M309).

Recovery operations are not expected to alter the plutonium isotopic ratios of the feed material. The material type used in the operation generating each waste item is documented on generator records; however, in many cases, items of different material types are packaged into the same waste container, so that a variety of plutonium isotopic ratios may be detected by radioassay. In addition, cross-contamination of equipment with different material types can lead to variable material types detected by radioassay (References D025, M019, M156, M159, M160, M215, M216, M217, M218, M219, M222, M238, M273, M274, M275, and M276).

The primary MT that feeds into the Pu-238 operations described in this report is heat source grade plutonium (MT 83), and these operations are not expected to alter the plutonium isotopic ratios of the feed material. Table 3 identifies the isotopic distribution of MT 83 based on 100 isotopic analyses and was decay corrected assuming the material was not chemically separated for 45 years (References C125, C186, C194, C209, C219, C222, D073, D074, D076, D080, D083, M283, M295, and M309).

5.4.2.2 U-233, U-234, U-235, and U-238

U-233 and U-238 are not normally components of the plutonium MTs handled at PF-4. U-235 is present from the decay of Pu-239 only at 0.1 percent by weight of the total plutonium content. However, all three isotopes have been introduced as special material. In addition, uranium-plutonium oxide mixtures have been processed to recover the plutonium. Significant quantities of U-234 will be present from the decay of Pu-238 in containers originating from heat source plutonium operations (References C222 and D025).

Table 3. Average Isotopic Content of Plutonium Material Types and Enrichments

Material Type (MT)	Plutonium Isotope (Wt. %)						Estimated Weight% Relative to Total Plutonium[a]		
	Pu-238	Pu-239	Pu-240	Pu-241	Pu-242	Pu-244	U-234	U-235	Am-241
MT 51	0.006	96.77	3.13	0.076	0.018	-	0.001	0.1	0.06
MT 52	0.01	93.78	6.0	0.2	0.02	-	0.002	0.1	0.2
MT 53	0.03	91.08	8.45	0.366	0.071	-	0.007	0.09	0.3
MT 54	0.046	87.42	11.5	0.81	0.22	-	0.01	0.09	0.7
MT 55	0.06	83.88	14.73	1.03	0.304	-	0.02	0.09	0.9
MT 56	0.061	81.9	16.51	1.18	0.355	-	0.02	0.09	1.0
MT 57	0.433	74.63	20.7	2.55	1.69	-	0.1	0.08	2.0
MT 42	0.73	1.06	6.40	1.97	89.83	-	0.3	0.0009	3.0
MT 83	78.9	18.4	2.5	0.055	0.15	-	33.1	0.02	0.42

[a] These ratios are calculated under the assumption that there is no chemical fractionation.
Sources: References C100, C101, C124, C125, D025, M017, and M309.

In general, uranium and its isotopes are expected to be present only at trace levels, if at all, if the feed material did not purposely contain uranium. However, some reactor fuel development, uranium-plutonium separation and pit disassembly operations have uranium material as the feed material. The primary uranium MT inputs are listed in Table 4, Average Isotopic Content of Uranium Material Types and Enrichments.

Table 4. Average Isotopic Content of Uranium Material Types and Enrichments

Material Type	U-234	U-235	U-236	U-238
MT 12	0.0015	0.23	0.008	99.77
MT 35	0.36	37.6	0.14	61.9
MT 36	0.63	62.44	0.18	36.75
MT 38	1.03	93.04	0.41	5.53
MT 39	1.32	97.52	0.17	0.99

Sources: References C100, D025, and M017.

U-234 content must be estimated since this isotope cannot be reliably measured using NDA techniques (Reference C001). The MT provides the basis for estimating an upper bound for U-234 based on the rate of decay of the precursor, Pu-238, and the assumption that there is no other source of uranium in the waste material. The content of U-234 in the Pu-239 MTs is calculated as the sum of the contributions expected from decay of Pu-238 and from uranium input to the operation, with the value of 0.014 conservatively used for the ratio of abundances of U-234 to U-235 in typical uranium MTs. The standard uranium MTs provide an estimate of the ratio of U-234 to U-235 where one of the MTs listed in Table 4 is an indicated MT in the waste container (Reference D025).

5.4.2.3 Am-241

AK on the MT inputs provides the basis for estimating an upper bound for Am-241 content based on the rate of decay of the precursor, Pu-241. The purpose of such bounding calculations is to provide a basis for identifying significant enrichment or depletion of Am-241 based on radioassay results for individual waste containers. The calculations assume that (a) none of these isotopes were initially present in the material, (b) the oldest plutonium material in inventory dates back to January 1, 1960, and (c) the legacy waste was packaged on January 1, 1996, making it 36 years old at that time. In general, wastes from the plutonium recovery process are enriched with Am-241, because a primary intent of the recovery process is to reduce the americium content of the retained plutonium (References C222 and D025).

No correlation is expected among the different radioelements, Pu, neptunium (Np), U, Pa, or Am. The differences in valence states and chemical affinities among these elements are expected to result in substantial fractionation during several recovery operations, including ion exchange, solvent extraction, hydroxide precipitation, and dissolution (Reference D025).

5.4.2.4 Other Radionuclides Present Due to Decay

Other radionuclides will be present in most of the wastes from the decay of a plutonium isotopic precursor or as a contaminant in the feed material (References C067, C073, C208, C209, and D025):

- Np-237, the decay product of Am-241 (half-life, 458 year), is expected to be present in minor amounts in most waste from recovery operations.
- Am-243, the decay product of Pu-243 (half-life, 5.0 hour), is expected to be present in minor amounts in most wastes from recovery operations. Pu-243 is produced by neutron capture on Pu-242 during fuel irradiation.
- Pa-231, the decay-chain daughter of U-235, is expected to be present in trace amounts in some wastes due to its widespread presence as a contaminant in recovery operations.
- Actinium (Ac)-227, the decay-chain daughter of Pa-231, is expected to be present in trace amounts where Pa-231 is present, but at several orders of magnitude less than Pa-231.

5.4.2.5 Cesium (Cs)-137 and Strontium (Sr)-90

<u>Cs-137</u>

Cs-137 is a product of the spontaneous fission of Pu-238, Pu-239, and especially Pu-240. Cs-137 is also a trace contaminant in purified plutonium from the production reactors (References C067 and C073). In the latter case, the remaining cesium could be on the order of 0.5 nanograms per gram (ng/g) plutonium. In the former instance the formation of Cs-137 due to spontaneous fission would lead to about 0.4 picograms per gram (pg/g) plutonium in plutonium that is 10 years old. Because Cs-137 due to spontaneous fission is about a factor of a thousand less than that due to residual contamination from the original separation on the production fuel, the latter is the dominant source of cesium in waste (References C208, C209, and D025).

<u>Sr-90</u>

Based on interviews with a Subject Matter Expert (SME), no spent nuclear fuel or other material containing Sr-90 were introduced into the TRU waste streams (Reference C076). No references or procedures related to spent fuel processing were located in the AK investigation of records. No generator documents (i.e., WODF, DWLS, TWSR, WPF) identified spent fuel or Sr-90 as inputs or as present in the waste (References C208, C209, and D025). During review of WPFs and database records from the waste storage facility (TA-54), use of material containing Sr-90 was identified in 771 containers of waste originating from TA-03 and TA-21. WPFs indicate processing

of fuel pins in metallography operations and of samples of Hanford Tank waste in chemistry experiments. These operations and wastes are segregated by facility of origin, and the wastes are not commingled with wastes from LANL. Like Cs-137, Sr-90 is a high yield fission product and is unlikely to be present except as a trace remnant from plutonium production/processing. Unlike Cs-137, however, Sr-90 (together with its Y-90 daughter) emits no significant gamma radiation that would allow it to be quantified by direct gamma counting. Therefore, no reliable means exist for the direct NDA of Sr-90. However, because of the requirement that an estimate of Sr-90 content be made, the following approach is taken. In plutonium production runs, Cs-137 and Sr-90 are produced at approximately the same level. These two nuclides have very similar half-lives (~ 30 y) and will therefore be present at roughly the same activity level prior to commencement of any processing operations. If it is assumed that strontium and cesium are not fractionated from one another during chemical processing, Cs-137 may be used as a marker for Sr-90 activity at a ratio of 1:1 (Reference D025).

5.4.2.6 Other Radionuclides Introduced as Feed Material

Secondary radionuclides are also present in the waste due to operations involving feed materials other than plutonium (Reference C076). Additional radionuclides expected to be present in each operation were listed by a panel of experts from LANL. The resulting list is documented in a memorandum linking the radionuclides to P/S Codes (References C076 and C108). The list includes Ac-227, Am-241, Am-243, cerium (Ce)-144, curium (Cm)-244, Np-237, Pa-231, Pu-238, Th-230, Th-232, U-233, U-235, and U-238 (see Table 5, Secondary Radionuclides in Plutonium Recovery TRU Waste).

The possible presence of Cm-244 in TRU waste is of particular interest to radioassay operations because it can affect the choice of a radioassay instrument to use for optimal results. Cm-244 was introduced in recovery operations in P/S Code (Detector oxide preparation [DOP]), which started in 1988 (References C067 and D083). Material outputs from this operation sometimes are sent to P/S Codes IS (Incinerator) or WE (Welding). Cm-244 could also be part of waste under P/S Code CA (Casting) because both operations take place in the 300 Wing of PF-4. Because only one room in this area is available for bagouts, TRU waste from P/S Codes DOP and CA are sometimes combined. In addition, because rags from DOP are sent to IS, Cm-244 could be present in the ash produced by this operation, which is then processed through nitrate aqueous recovery operations. Some fraction of the Cm-244 could ultimately end up in the evaporator bottoms, which is then immobilized in cement in P/S Code CF (cement fixation) (Reference D025).

Table 5. Secondary Radionuclides in Plutonium Recovery TRU Waste

Secondary Radionuclide	P/S Code Generating Waste
Actinium-227	AD, ARI, BC, CV, FF, HGMS, LIBS, PF, SRL, WM, XO
Americium-241	AO, AP, CA, CD, CF, CLX, CXL, DOP, EV, FA, HCD, HD, HP, IA, LR, MA, OH, PI, PR, PRR, PS, SS, SX, WE, XP; plus trace amounts expected in TRU waste generated by nearly all P/S Codes, due to ingrowth from Pu-241 decay. Waste could be either depleted or enriched in Am depending upon whether the source of contamination is the product or the residues.
Americium-243	BC, CA, DOP, JA, MA, PH, PI, SS, WE
Cerium-144	DOP, WE
Curium-244	CA, CF, DOP, IS (Mar-Apr 1987), WE
Neptunium-237	ATL, BC, CA, CF, DOP, ED, EV, IS, JA, MA, Neptunium, PI, RB, RFX, WE; plus trace amounts expected in TRU waste generated by nearly all P/S Codes, due to ingrowth from Am-241 decay.
Protactinium-231	AD, BC (1989), FF, JA (1989), WE, WM, XO/X0
Plutonium-238	AAP, TDC, TSC
Plutonium-241	EV, IS, TDC, TSC
Thorium-232	CF, DOP, PT, WE, XO/X0
Thorium-232 enriched with Thorium-230	BC, JA, WE
Uranium-233	DOP, WE
Uranium-235 or enriched uranium	CN, EDC, FF, GI, ME, MW, OB, PD, PI, RS, SRL, UA, UCON; and P/S Codes in nitrate operations (AL, AO, AP, AS, AT, ATL, BAC, BF, BL, BM, BU, CC, CD, CF, CH, COD, COL, CPOD, CR, DF, DP, DS, ED, ETD, EV, FA, FC, FX, GMS, HC, HCD, HD, HGMS, HP, HRA, IA, IS, LC, LG1, LG2, LR, MAG, MAS, MB, MELL, MF, ML, MPD, NC, NL, NR, OD, OH, OY, PA, PAF, PR, PS, PT, PTS, RB, RBJ, RC, RCM, RFX, RO, RR, SC, SP, SSD, SX, TDC, TSC, UPS, US, US2, VC, VP1, VP2, VP3, VUL, ZD)
Uranium-238 or depleted uranium	BC, CN, EDC,FF, GI, JA, LC, ME, MW, OB, PD, RC, RS, SRL, UA, UCON, UPS, US, WE, and P/S Codes in nitrate operations (AL, AO, AP, AS, AT, ATL, BAC, BF, BL, BM, BU, CC, CD, CF, CH, COD, COL, CPOD, CR, DF, DP, DS, ED, ETD, EV, FA, FC, FX, GMS, HC, HCD, HD, HGMS, HP, HRA, IA, IS, LC, LG1, LG2, LR, MAG, MAS, MB, MELL, MF, ML, MPD, NC, NL, NR, OD, OH, OY, PA, PAF, PR, PS, PT, PTS, RB, RBJ, RC, RCM, RFX, RO, RR, SC, SP, SSD, SX, TDC, TSC, UPS, US, US2, VC, VP1, VP2, VP3, VUL, ZD)

Sources: References C069, C076, C108, C189, C209, C215, D009, D011, D025, D029, D032, D036, and D083.

5.4.2.7 Estimated Predominant Isotopes and 95 percent Total Activity

Radionuclide data established by the PF-4 waste generator on a container basis and container data from the Area G waste storage records were evaluated to determine the relative radionuclide weight and activity for waste stream LA-MHD01.001. From this evaluation, the two predominant isotopes for the waste stream are Pu-239 and U-238, while over 95 percent of the total activity in the waste stream is from Pu-238, Pu-239, and Pu-241. It should be noted that although U-238 is the second prevalent radionuclide by mass in the waste stream, it was reported in approximately 525 containers. Table 6, Estimated Radionuclide Distribution in LA-MHD01.001, identifies the relative radionuclide weight and activity percent of expected radionuclides over the entire waste stream based on the container data evaluated. As illustrated in Table 6, the radionuclide weight percent of individual radionuclides varies greatly on a container-by-container basis. Because of this variability in container loadings, some containers will not contain the waste stream predominant radionuclides but may contain other radionuclides expected in this waste stream (References C133, C153, C175, C179, C225, C232, C233, DR048, M159, M241, M298, M307, and M309).

5.4.2.8 Use of Radionuclide Isotopic Ratios

For waste containers where direct measurement does not yield useable isotopic ratio information, AK may be used to supplement direct measurement data in accordance with the WIPP-WAC (Reference 3). The ratios that may be used are those identified in Tables 3 and 4 in conjunction with the corresponding nuclear material type identified by the waste generator on a container basis. The specific use and confirmation of AK related to WIPP-certified assay measurements of containers in this waste stream is documented in the memorandum written in accordance with the requirements of CCP-TP-005 (Reference 8).

Table 6. Estimated Radionuclide Distribution in LA-MHD01.001

Radionuclide	Total Nuclide Weight%[1,5]	Total Nuclide Curie%[2,5]	Nuclide Wt% Range for Individual Containers[3,5]	Nuclide Ci% Range for Individual Containers[4,5]	Expected Present
WIPP Required Radionuclides					
Am-241	0.16%	1.45%	0 - 100.00%	0 - 100.00%	Yes
Pu-238	0.65%	**29.66%**	0 - 100.00%	0 - 100.00%	Yes
Pu-239	**67.43%**	**11.14%**	0 - 100.00%	0 - 100.00%	Yes
Pu-240	4.75%	2.87%	0 - 42.06%	0 - 31.10%	Yes
Pu-242	1.17%	0.01%	0 - 100.00%	0 - 100.00%	Yes
U-233	Trace	Trace	0 - 36.88%	0 - 0.97%	Yes
U-234	0.02%	Trace	0 - 28.84%	0 - 0.51%	Yes
U-238	**24.13%**	Trace	0 - 99.90%	0 - 7.33%	Yes
Sr-90	Trace	Trace	0 - Trace	0 - Trace	Yes
Cs-137	Trace	Trace	0 - Trace	0 - Trace	Yes
Additional Radionuclides					
Ac-227	Trace	Trace	0 - Trace	0 - Trace	Yes
Am-243	Trace	Trace	0 - 0.52%	0 - 0.32%	Yes
Cd-109	Trace	0.60%	0 - 1.75%	0 - 99.40%	Yes
Ce-144[6]	Not Reported				Yes
Cm-243	Trace	Trace	0 - Trace	0 - 81.34%	Yes
Cm-244	Trace	Trace	0 - 3.12%	0 - 90.33%	Yes
Cm-245	Trace	Trace	0 - Trace	0 - Trace	Yes
Co-60	Trace	Trace	0 - Trace	0 - Trace	Yes
Eu-152	Trace	Trace	0 - Trace	0 - Trace	Yes
Eu-154	Trace	Trace	0 - Trace	0 - Trace	Yes
H-3	Trace	Trace	0 - Trace	0 - Trace	Yes
Mn-56	Trace	Trace	0 - Trace	0 - Trace	Yes
Na-22	Trace	Trace	0 - Trace	0 - Trace	Yes
Np-237	0.03%	Trace	0 - 100.00%	0 - 100.00%	Yes
Np-239	Trace	Trace	0 - Trace	0 - 97.25%	Yes
Pa-231	Trace	Trace	0 - Trace	0 - Trace	Yes
Pa-233	Trace	Trace	0 - Trace	0 - 0.11%	Yes
Pb-212	Trace	Trace	0 - Trace	0 - Trace	Yes
Pu-241	0.20%	**54.27%**	0 - 20.00%	0 - 93.99%	Yes
Pu-244	Trace	Trace	0 - 0.29%	0 - Trace	Yes
Th-228	Trace	Trace	0 - Trace	0 - Trace	Yes
Th-229	Trace	Trace	0 - Trace	0 - Trace	Yes
Th-230[6]	Not Reported				Yes
Th-232	0.96%	Trace	0 - 95.61%	0 - Trace	Yes

Table 6. Estimated Radionuclide Distribution in LA-MHD01.001 (Continued)

Radionuclide	Total Nuclide Weight%[1,5]	Total Nuclide Curie%[2,5]	Nuclide Wt% Range for Individual Containers[3,5]	Nuclide Ci% Range for Individual Containers[4,5]	Expected Present
Additional Radionuclides					
Tl-208	Trace	Trace	0 - Trace	0 - 0.01%	Yes
U-232	Trace	Trace	0 - 1.29%	0 - 56.61%	Yes
U-235	0.49%	Trace	0 - 98.67%	0 - 99.02%	Yes
U-236	Trace	Trace	0 - 0.42%	0 - Trace	Yes
Other radionuclides that may be present in unknown amounts (no data values were available, although the radionuclides were listed in databases)					
Bk-249 Cf-252 Co-57					Yes

1. This listing indicates the total weight percent of each radionuclide over the entire waste stream.
2. This listing indicates the total activity (curie) percent of each radionuclide over the entire waste stream.
3. This listing is the weight percent range of each radionuclide on a container-by-container basis.
4. This listing is the curie percent range of each radionuclide on a container-by-container basis.
5. “Trace” indicates <0.01 weight or activity percent for that radionuclide.
6. Radionuclides not reported but suspected present from secondary radionuclides or decay.

5.4.3 Chemical Content Identification – Hazardous Constituents

Waste stream LA-MHD01.001 has historically been managed in accordance with the generator site requirements and in compliance with the requirements of the New Mexico Environmental Department (NMED). Based on historical waste management and LANL’s TRU Program (reference LANL waste streams LA-TA-55-19, LA-TA-55-30, LA-MHD02-238, and LA-MHD03-DD), the containers in this waste stream were managed as hazardous and assigned EPA HWNs for arsenic (D004), barium (D005), cadmium (D006), chromium (D007), lead (D008), mercury (D009), selenium (D010), silver (D011), benzene (D018), carbon tetrachloride (D019), chlorobenzene (D021), chloroform (D022), methyl ethyl ketone (D035), pyridine (D038), tetrachloroethylene (D039), trichloroethylene (D040), and F-listed solvents (F001, F002, F003, and F005). A review of available AK documentation has determined that this waste is hazardous for the above constituents, and with the exception of F003, the HWNs were retained because this waste was previously shipped under an approved LANL profile. HWN F003 was not assigned because the waste stream does not exhibit the characteristic of ignitability. It should be noted that this waste stream also includes a small fraction of waste that LANL characterized as nonhazardous (reference LANL waste streams LA-NCD01, LA-NHD01, and LA-NHD02-238). As discussed in Section 4.3.7, supplemental information collected and CCP characterization results of LANL generated nonhazardous containers determined that this waste is hazardous. The following sections describe the characterization rationale for the assignment of EPA HWNs. Table 7, Waste Stream LA-MHD01.001 Hazardous Waste Characterization Summary, summarizes the EPA HWNs assigned to this waste stream. The HWN assignments have been applied on a waste stream basis; individual containers may not contain all of the hazardous materials listed for the waste stream as a whole (Reference C121, C147, D026, D083, and M310).

Table 7. Waste Stream LA-MHD01.001 Hazardous Waste Characterization Summary

Waste Stream	EPA HWNs
LA-MHD01.001	F001, F002, F005, D004, D005, D006, D007, D008, D009, D010, D011, D018, D019, D021, D022, D035, D038, D039, and D040

Chemical constituents of inputs are compiled from chemical lists contained in procedures and from SME input. In this section, discussions of the chemical inputs are divided into the following categories (References C121 and C147):

- Process feed materials
- Chemical Identification and Use

Table 8, Feed Materials for TA-55 Operations, provides a summary of the special nuclear material feed materials processed by the operations described in this report. Process chemicals and their respective uses are presented in the following sections (References D007, D008, D009, D010, D011, D025, D028, D029, D030, D032, D036, and D080).

Table 8. Feed Materials for TA-55 Operations

Feed Material	Potential Presence of RCRA-Regulated Constituents*	P/S Codes and Associated Operation Areas
Analytical laboratory solutions	Potentially contaminated with RCRA-regulated constituents: All analytical laboratory solutions are potentially contaminated with chromium (D007), lead (D008), and mercury (D009). C-AAC (formerly CLS-1) solutions potentially contaminated with mercury (D009) and lead (D008), as well as RCRA-listed organic substances used as solvents, including acetone (F003), butyl alcohol (butanol, F003), carbon tetrachloride (F001, D019), chlorobenzene (F002, D021), chloroform (D022), methanol (F003), methylene chloride (F002), tetrachloroethylene (F002, D039), xylene (F003).	Pyrochemical and Chloride operations: CLS, CW (analytical laboratory solutions from LANL Group C-AAC [formally CLS-1]); Miscellaneous operations: APD (C-AAC [formerly CLS-1] solutions); ACL, ICP (PF-4 solutions) Nitrate operations: CF, HP Special operations: CP Pu-238 operations: R8
Anode heels	Typically contaminated with RCRA-regulated heavy metals cadmium (D006), chromium (D007), lead (D008), and silver (D011). Heavy metals arsenic (D004), mercury (D009), and selenium (D010) are not present because they are volatilized from the Pu oxide feed at the high temperatures to which this material is subjected in P/S Codes ER, RM, and SS (electrorefining step).	Nitrate operations: AS, BF, BU Pyrochemical and Chloride operations: RA, SS
Ash from P/S Codes ETD, IS, SB, TDC, or from other DOE facilities	Usually suspect contaminated with barium (D005), cadmium (D006), chromium (D007), lead (D008), and silver (D011). Arsenic (D004), mercury (D009), and selenium (D010) metals are volatilized at high temperatures if present in the oxide and chloride forms.	Miscellaneous operations: CK, CV, FDL, FLU, SO, XP Nitrate operations: AL, AT, ATL, ED, HGMS, HRA, IS, MPD, PTS, RC, SC Special processing operations: ACD, IAM, SB, SL
Crucible pieces (tantalum, magnesium oxide)	Typically fairly pure, no RCRA substances present	Pyrochemical and Chloride operations: CL, CXL Nitrate operations: MAS, SC Special processing operations: ACD, SL Pu-238 Operations: ASP
Disassembled weapons components (pit disassembly)	High-purity Pu and U material types, no RCRA substances present	Metal operations: CA, PH, SRL Miscellaneous operations: EDC Nitrate operations: BM, RB, RBJ
Experimental R&D feed materials; various isotopes and isotopic mixtures of actinides in various matrices	Variable purity; may or may not contain RCRA substances	Miscellaneous operations: AD, CV, EXT, HRS, RASS, SA, XES, XP Nitrate operations: MAS

Table 8. Feed Materials for TA-55 Operations (Continued)

Feed Material	Potential Presence of RCRA-Regulated Constituents*	P/S Codes and Associated Operation Areas
Hydroxide cakes (output from P/S Codes ASP, CLS, CW, CXL, DO, NP, POSM, PRR)	Typically contaminated with RCRA-regulated heavy metals cadmium (D006), lead (D008), mercury (D009), silver (D011), and possibly chromium (D007)	Miscellaneous operations: AD Nitrate operations: CD, HCD, HD, LG2 Special processing operations: CP, DO, POSM Pu-238 Operations: R8
Iridium Metal	Typically fairly pure, no RCRA substances present	Pu-238 Operations: RCI
Miscellaneous materials contaminated with Pu (e.g., sand, slag, tools, crucibles, metal, glass, plastic, labware, scrap, rags, glovebox sweepings, pump oils, HEPA filters)	May be contaminated with RCRA-regulated heavy metals silver (D011), cadmium (D006), mercury (D009), lead (D008), and possibly chromium (D007)	Miscellaneous operations: APD Nitrate operations: ATL, BAC, CPOD, CR, ED, ETD, GMS, HGMS, IS (combustible material), LG1 (non-combustible material), MAG, MAS, MELL (cellulosic material), ML (metal equipment), NC (non-combustible material), NL (non-combustible material), PA (glovebox sweepings), PAF, RO (organics), SC, SP, TSC (cellulosic material), VC, ZD Pyrochemical and Chloride operations: PK (hardware, metal, anode chips from other P/S Codes) Special processing operations: ACD, CP, DO, NP, SB, SL Pu-238 Operations: ASP
MSE salts	Typically fairly pure, suspect contaminated with barium (D005)	Pyrochemical and Chloride operations: CXL, MB, MS Miscellaneous operations: XP Nitrate operations: MB, PS Special processing operations: RM
Neptunium residues from vault	No RCRA-regulated substances	Pyrochemical and Chloride operations: Neptunium (only active in 1993)
Pu chlorides and fluorides	Variable purity; may or may not contain RCRA substances	Miscellaneous operations: FDL, SO Pyrochemical and Chloride operations: ER, SD, SS Special processing operations: RM

Table 8. Feed Materials for TA-55 Operations (Continued)

Feed Material	Potential Presence of RCRA-Regulated Constituents*	P/S Codes and Associated Operation Areas
Pu containing solutions and liquids	Variable purity; may or may not contain RCRA-regulated substances	Nitrate operations: DS, LR, RFX, EV, CF Special processing operations: CP, NP, SL Pu-238 Operations: R8
Pu metal or metal alloy from vault or from various operations	High purity, no RCRA-regulated substances, unless noted otherwise	Metal operations: AAP, AO, ARI, BC, BT, CA, DA, ELW, EVAC, FSPF, ITF, ITF4, ITF7, JA, KBTF, MA, MBC, MW, PCH (variable purity), PD, PE, PF, PH, PSE, RL, SRL, VD, WE, WLT Miscellaneous operations: AC, AC1, AC2, ECHM, EXT, LIBS, ME, SA, SMP, VS Nitrate operations: ATL, BM, BU, MF, PAF, VP1 Pyrochemical and Chloride operations: CRD (variable purity), MO, SCB, SS, SSMD Special processing operations: ACC (variable purity), PI (variable purity), PPD, POSM, RM, SB Pu-238 Operations: ASP
Pu oxalates	Typically fairly pure, no RCRA substances present	Nitrate operations: CC, DF, HC Pu-238 Operations: ASP
Pu oxides	Variable purity oxides from P/S Codes RB, RBJ and others, and from the vault; suspect contaminated with RCRA-regulated heavy metals cadmium (D006), chromium (D007), and lead (D008) High purity oxides from P/S Codes CA, DO, and MA, and from the vault; may or may not contain RCRA substances Incoming Pu-238 oxide from SRS exceeds regulatory limits for chromium (D007) and may exceed limits for cadmium (D006), lead (D008), and silver (D011) for some fuel lots (References D073, D074, and M283). However, calculations documented in Reference D076 support the conclusion that the levels of these metals in TA-55 waste streams from Pu-238 operations are below RCRA's regulatory limits.	Metal operations: DOP (high-purity Pu and other radionuclides as oxides) Miscellaneous operations: CK, CV, EOC, EXT, FDL, FLU, IB, LI, LIBS, MIS, SMIS, SO, STF, VS, XP Nitrate operations: ATL, BL, CH, CPOD, DP, ED, FC, HRA, LC, MPD, OD, PT, RB, RBJ, SP, SSD, UPS, US, US2 Pyrochemical operations: MP (generally high purity), OR (variable purity), PTP Special processing operations: DO, PX, POSM, RM Pu-238 Operations: ASP, C1, GPHS, MTL, P1, SCP, WS
Pu-Be sources	High purity constituents, no RCRA-regulated substances	Pyrochemical and Chloride operations: PB, PUB

Table 8. Feed Materials for TA-55 Operations (Continued)

Feed Material	Potential Presence of RCRA-Regulated Constituents*	P/S Codes and Associated Operation Areas
Pyrochemical salts	Typically fairly pure, no RCRA substances other than barium (D005) are present	Pyrochemical and Chloride operations: MB, MS, PRR Miscellaneous operations: EXT, IB Nitrate operations: COD, COL, MB Special processing operations: Me Pu-238 Operations: MTL, PP, WD
Reactor fuel pellets/heat sources	High purity Pu and U material types, no RCRA-regulated substances	Miscellaneous operations: ME Pu-238 Operations: MTL, PP, WD
Stainless-steel and/or tantalum residues from decladding of Pu-Be sources	High purity metals, potential leaching of chromium (D007) from stainless-steel if subjected to strong acid	Pyrochemical and Chloride operations: PUB
Uranium metal, carbides, nitrides and oxides	No RCRA-regulated substances	Metal Operations: FF, SRL, UCON Miscellaneous Operations: ME

*The information in this column is highly generalized. Applicability of specific HWNs to an operation as a result of the feed material must be determined on a case-by-case basis because the presence and fate of contaminants is time and function dependent.

5.4.3.1 Chemical Inputs

To assign EPA HWNs, the available AK documentation is reviewed to assess chemical usage in the TA-55 PF-4 operations contributing to waste stream LA-MHD01.001, and potentially hazardous materials that may have been introduced into the waste stream. In addition, MSDSs are obtained for the commercial products to determine the presence of potentially regulated compounds. As described below in Table 9, Chemical Identification and Use Summary, several of the HWNs are assigned due to lack of analytical evidence that these constituents have not exceeded the regulatory thresholds. These chemical inputs are used during TA-55 R&D/fabrication and associated recovery, facility and equipment maintenance, D&D, waste repackaging, and below-grade retrieval operations and have the potential to contaminate all the waste streams characterized by this report.

Table 9. Chemical Identification and Use Summary

Chemical/Product	Use/Source	P/S Code(s)	Document Source(s)	EPA HWN(s)
1,1,1-Trichloroethane	Metallographic sample cleaning (<1992) and contaminant of hydroxide solids. Degreasing solvent and component of Tap Magic.	MA, MTL, R8	C019, C020, C089, C194, C195, M154, M160	F001, F002
1,2-Dimethoxyethane	Organoactinide R&D reagent.	SA	P080	NA
1-Propanol	Used in cold traps and cooling baths during plutonium fluorination.	CK	D032, P071	NA
Acetone	Contaminant of cement fixation process and hydroxide solids. Detected in headspace gas of Pu-238 waste. May be associated with all debris waste generated by P/S Code ME. CLS reagent.	APD, CF, CLS, CW, FF, HP, MA, ME, MOX, R8	C019, C092, C194, D007, D076, D078, M164, M180, M186,	NA
Acetonitrile	Non-aqueous dissolution/extraction.	AC2	C027, D032	NA
Alconox	Pu-238 oxide sample cleaning soap.	GPHS, P1, PP	C194, D080, M286	NA
Aluminum chloride	Chloride operations ion exchange reagent	CSE, CX, CXL, DO, SE	D007, P027	NA
Aluminum fluoride	Plutonium recovery operations.	Unspecified	D002, D009, D023, D032, D041	NA
Aluminum metal/oxide (alumina)	Metallographic sample polishing, ash fluorination gas trap, metal used in machining operations, and component of equipment/tools.	BA, MA, MTL, SO, UPS	C194, D076, D080,M085, P051, P069, P148	NA
Aluminum nitrate	Pu-238 oxide purification and ATLAS R&D recovery operations reagent. Dissolution and leaching reagent.	AL, ASP, AT, ATL	C210, D080, M085, M088, M093, P190	NA
Ammonium chloride	Hydroxide precipitation and plutonium chlorination reagent.	CV, DO	M048, P083	NA
Ammonium hydroxide	Hydrothermal processing reagent.	APD	M223	NA
Antimony pentafluoride	Organoactinide R&D reagent.	SA	P065	NA
Arsenic	Contaminant of liquids, filtrates, ash, hydroxide cake, and analytical solutions. Evaporator sludge contaminant and sputter coating reagent.	EV, PE, R8, TDC	C010, C196, C197, C207, D078, D080, M153	D004
Ascarite II	Sodium hydroxide coated silicate absorbent used in fuel fabrication process.	FF	C066, M154	NA
Ascorbic acid	ATLAS R&D recovery operations and dissolution reagent.	ATL, Various	M127, P190	NA
Barium	Contaminant of plutonium feed, hydroxide cake, ash, actinide separation waste, pyrochemical salts, and analytical solutions.	ATL, EV, EXT, R8, TDC, Various	C038, C087, C192, C197, D075, D078, D080, M153	D005
Benzene	Cement fixation input and actinide chemistry R&D operations reagent.	AC, AC1, AC2, CF, SA	C027, D009, D032, D077P080, P081,	D018, F005,
Beryllium	Contaminant of plutonium/beryllium sources and metal used in machining operations.	MA, PB, PUB	C122, D007, D025, P148	NA

Table 9. Chemical Identification and Use Summary (Continued)

Chemical/Product	Use/Source	P/S Code(s)	Document Source(s)	EPA HWN(s)
Bismuth/bismuth-tin alloy	Metal used in electrorefining and sample mounting.	ER, SMP	C031, D002. D028	NA
Bromine	Fluorination of ash and R&D reagent.	SA, SO	C026, P069	NA
Bromobenzene	Plutonium machining.	MA	C019	NA
Bromocresol purple	Hydroxide precipitation indicator.	CX, CXL, DO	M048, M074, M182, P028	NA
n-Butyl alcohol (butanol)	Associated with debris waste. Contaminant of cement fixation process. Detected in headspace gas of Pu-238 waste. CLS reagent.	ACL, APD, CF, CLS, CW, HP, ICP	C092, D007, D076, D078	NA
Cadmium	Contaminant of plutonium feed, hydroxide cake, anode heels, ash, actinide separation waste, and analytical solutions. Solvent metal used in electrorefining.	AD, ATL, EXT, ER, EV, HP, IS, PX, R8, RC, SS, Various	C038, C039, C192, C196, C197, C200, D073, D075, D076, D080, M061, M153	D006
Calcium carbonate	Scrubber system, hydroxide precipitation, dissolution, and salt stripping reagent.	DO, SL, SS	M028, M048, M118, M127, M131	NA
Calcium chloride	Electrorefining and direct oxide reduction reagent.	OR, SS, WS	D070, D080, M029, M113, P189	NA
Calcium fluoride	ATLAS R&D recovery operations and leaching plutonium residues reagent.	AT, ATL, DO, SL	M053, M069, M093, M118, M144, P190	NA
Calcium hydroxide	Neutralization of acids.	Various	C033	NA
Calcium metal/oxide	Actinide R&D and direct oxide reduction reagent.	AD, OR, RM, PX, WS	M050, M130, D070, D080, P189	NA
Calcium nitrate	Nitrate operations reagent.	ATL	D002, D008	NA
Carbon tetrachloride	Contaminant of cement fixation process and hydroxide solids. Used in PTP between 1/87 and 6/89. Chlorination of plutonium oxide and CLS reagent.	AD, APD, ATL, CF, CLS, CV, PTP, PX, R8	C092, C121, C194, C200, D078, M112, M129, P067	D019, F001
Cerium nitrate	Electro-oxidation reagent.	MELL	M092	NA
Cesium chloride	Molten salt extraction reagent salt and dissolution reagent.	CLS, CXL, PRR, SS	D055, M184	NA
Chlorobenzene	Contaminant of cement fixation process and hydroxide solids. CLS reagent.	ACL, APD, ATL, CF, CLS, CW, HP, ICP	C092, C095, C200, D007, D077, D078	D021, F002
Chloroform	Contaminant of cement fixation and miscellaneous processing (P/S XO/X0). CLS reagent.	AC, AC1, AC2, APD, CF, CLS, FF, R8, XO/X0	C027, C092, C102, C117, C194, D077, D078	D022
Chromium	Contaminant of plutonium feed, anode heels, hydroxide cake, ash, actinide separation waste, and analytical solutions. Potentially leached from stainless-steel materials.	APD, ATL, EV, EXT, HP, IS, R8, RC, TDC, XO/X0, Various	C038, C039, C192, C196, C197, C200, C205, D073, D074, D075, D078, D080, M061, M153	D007
Citofix/Durofix	Metallographic sample mounting.	MTL	C197, M154, D080	NA
Citrapeel (orange peel based degreaser)	Used to strip paint.	XO/X0	C033, D032, M154	NA
Cobalt nitrate	Electro-oxidation reagent.	MELL	M092	NA

Table 9. Chemical Identification and Use Summary (Continued)

Chemical/Product	Use/Source	P/S Code(s)	Document Source(s)	EPA HWN(s)
Copper	Measuring physical properties standard. Component of gaskets and wool used during disassembly of parts.	BC, PI, SRL, VP2, Various	M030, M043, M084, M202, P053	NA
Diamond powder	Metallographic polishing compound.	MTL	P181	NA
Diatomaceous earth	Silica and quartz filter aid and absorbent material.	PT, Various	M154, M172, P005, P103, P117	NA
Dibutyl butyl-phosphonate (DBBP)	Actinide R&D reagent.	AD	M050	NA
Dicesium hexachloroplutonate (DCHP)	Residue precipitation reagent.	CLS, CXL, PRR	D055, M184	NA
Diethylenetriamine	Metallographic sample mounting.	MTL	C197, D080	NA
Diethyl oxalate	ATLAS R&D recovery operations reagent.	ATL	M144, P190	NA
Dihexyl N, N-diethylcarbamoylmethyl phosphonate (DHDCMP)	Liquid-liquid extraction solvent.	APD	C023, C199	NA
Diisopropyl benzene	Liquid-liquid extraction solvent, diluent, and actinide R&D reagent.	AD, APD	C023, D032, C199, P067	NA
Dimethyl sulfoxide	Organoactinide R&D reagent.	SA	P080	NA
n-Dodecane	Actinide R&D solvent diluent and chloride extraction reagent.	AD, CXL	M154, M182, P067	NA
Dowanol (e.g., Dowanol EB)	Sodium metal neutralization reagent.	EL, FF	C079, C102, D011, D029, M154	NA
Duco cement	Sealing cuvettes.	P1	C194, D075, D080, M154	NA
Envirostone Accelerator (gypsum and potassium sulfate)	Cement accelerator used in cement fixation process.	CF, HP	D078, M154, P008, P183	
Epon Resin 8132	Metallographic sample mounting.	MTL	C197, D080, M154	NA
Ethanol	Used for cleaning capsules and tools during Pu-238 oxide sampling and R&D reagent. Contaminant of cement fixation and miscellaneous processing (P/S XO/X0).	AD, GPHS, ME, P1, PP, R8, XO/X0	C089, C194, C195, D032, D077, D080, P067, P180	NA
Ethylene glycol	Pu-238 oxide sampling suspension. Particle analysis of oxides.	GPHS, P1, PP	C194, C195, C197, D080, M137, M286	NA
Ethyl ether	Organoactinide R&D reagent and cleaning solvent.	MA, SA	C019, M002, P080	NA
Fantastik	Pu-238 oxide sampling and spray cleaner for machining. Used during decontamination operations.	GPHS, MA, P1, PP, Various	C019, C150, C194, D080, M154, M286	NA
Ferric ammonium sulfate hydrate	Catalyzed electrochemical plutonium oxide dissolver reagent.	CPOD	M086	NA
Ferric nitrate	Waste solidification and dissolution reagent.	DO, R8	C194, D080, M126, P182	NA
Ferrous ammonium sulfate	Nitrate anion exchange and ATLAS R&D recovery operations reagent.	ATL, IX	D030, P190	NA
Ferrous chloride	Residue precipitation reagent.	CXL	D002, D007, D023, D041	NA
Ferrous sulfamate	Ash leaching reagent.	AT	M093	NA
Fluoristan (stannous fluoride)	ATLAS R&D recovery operations reagent.	ATL	M144, P190	NA

Table 9. Chemical Identification and Use Summary (Continued)

Chemical/Product	Use/Source	P/S Code(s)	Document Source(s)	EPA HWN(s)
Fluorosulfonic acid	Organoactinide R&D reagent.	SA	P065	NA
Formamide	ATLAS R&D recovery operations reagent.	ATL	M144, P190	NA
Formic acid	Dissolution and plutonium recovery reagent.	ATL, CF, EV, Various	C076, D002, D008, D036, M144	NA
Freon TF (1,1,2-trichloro, 1,2,2-trifluoroethane)	Miscellaneous processing contaminant and recovery operations reagent. Cleaning, cooling, and ultrasonic degreasing operations solvent.	CA, DA, DO, EL, MA, MW, PD, PF, RM, SBB, SCB, SRL, SS, UA, VD, VU, WE, WM, XO/X0	C011, C017, C019, C085, C102, C104, C105, D029, D077 M026, M032, M041, M123, M212, P044, P046, P049	F001, F002
Gallium	Actinide R&D and casting reagent. Metal used in electrorefining and compatibility testing.	AAP, AD, CA, ER, SMIS	D002, D009, D011, M032, P014, P076	NA
GoJo cleaner (kerosene derivative)	Parts cleaning solution.	ITF, ITF7	D019, M154	NA
Gold	Metal used in welding operations, coating material, and component of transfer boat used in plutonium fluoride reduction.	RL, WE	C018, M202, P044	NA
Graphite	Graphite aeroshells and insulators, molds, blocks, and powder for fire suppression.	CA, FF, ITF, ITF4, ITF7, SS, WD	D029, D074, M032, M116, P090	NA
Gypsum cement (Envirostone)	Cement used in cement fixation process.	CF, HP	C206, D071, D078, M154, P008, P183	NA
Hexane	Miscellaneous processing contaminant and R&D solvent for actinide chemistry.	AC1, AC2, FF, SA, XO/X0	C102, D077, P080, P081,	NA
Hydrazine dihydrochloride	Actinide R&D and sensors/instrumentation development reagent.	AD	D032, P076, P078	NA
Hydrazine hydrochloride	Actinide R&D reagent.	AD	D002, D023, D032, D041	NA
Hydrobromic acid	Metallographic sample etching.	MTL	C194, D080, P181	NA
Hydrochloric acid	Dissolution and recovery, sample etching, and ATLAS R&D recovery operations reagent. Chloride ion exchange reagent.	ATL, CLS, CXL, DO, MTL, PPD, Various	C076, C194, D080, M048, M064, P181, P190	NA
Hydrofluoric acid	Dissolution of oxide pellets, scrap processing, decontamination, fluorination, sample etching, ATLAS R&D recovery operations reagent, and metal leaching.	ASP, ATL, MP, MTL, NC, OD, PPD, PT, SP, WD, Various	C076, C192, C194, C210, C213, D079, D080, M072, M089, M090, M095, P103, P181, P190	NA
Hydrogen peroxide	ATLAS R&D recovery operations reagent, peroxide precipitation, and dissolution.	AD, ATL, DO, Various	M048, M125, M144, P028, P076, P190	NA
Hydroxylamine hydrochloride	Actinide R&D and ion exchange reagent.	AD, IX	D002, D023, D032, D041, M044, M050	NA
Hydroxylamine nitrate	Scrap processing, ATLAS R&D recovery operations, ion exchange, and hydroxide precipitation reagent.	AD, ASP, ATL, DO, IX, PT, Various	C210, D078, D080, M044, M045, M048, M050, M076, P103, P190	NA

Table 9. Chemical Identification and Use Summary (Continued)

Chemical/Product	Use/Source	P/S Code(s)	Document Source(s)	EPA HWN(s)
Indium	Metal used in compatibility testing.	SMIS	D009	NA
Iodine	Actinide R&D reagent.	SA	C026	NA
Isopar H (isoparaffin solvent)	Actinide R&D reagent.	AD	D032, M050, M154	NA
Isopropanol	Miscellaneous processing waste contaminant, cleaning agent, and organoactinide R&D reagent.	BA, SA, XO/X0	D077, P051, P080	NA
Kerosene	Metallurgical sample preparation solvent.	ME	C035	NA
Kitty Litter	Clay based absorbent material used during remediation/repackaging operations.	Various	M154, P198	NA
Lanthanide metals	Actinide chemistry R&D reagents.	AC1, AC2	D009, P081	NA
Lanthanum nitrate	Plutonium dissolution and precipitation.	PT	D078, M076, P103	NA
Lead	Leaded gloves (<1992), shielding, sheeting, and discs. Contaminant of actinide separation waste, analytical solutions, ash, hydroxide cake, plutonium feed, and solder. Solvent metal used in electrorefining.	APD, ATL, BT, DOP, ER, EV, EXT, GPHS, HP, IS, KBTF, P1, PX, R8, RC, SS, XO/X0, Various	C039, C041, C192, C196, C197, C200, D002, D011, D073, D074, D075, D076, D078, D080, M061, M153, P183, P186	D008
Lead hydroxide, oxide, and nitrate	Actinide R&D reagents.	AD	D032, M050	D008
Liqui-Moly (molybdenum lubricant)	Pellet press die lubricant.	FF, RS	M172	NA
Lithium chloride	Direct oxide reduction reagent salt.	AD, OR, PX, RM	M050, M130, M134, P105	NA
Lithium metal/oxide	Actinide R&D and direct oxide reduction reagent.	OR, PX, RM	M130, M134	NA
Lonzest SML-20 organic liquid emulsifier	Cement fixation liquid emulsification.	CF	M154, P186	NA
Lutetium	Sputter coating reagent.	PE	D023, D029	NA
Magnesium chloride	Molten salt processing reagent.	RCI, SS	C194, D011, D028, D055, D076, D080	NA
Magnesium hydroxide	Dissolution and oxygen sparging-pyrochemical operations.	DO, Various	M048, P028	NA
Magnesium metal/oxide	Actinide R&D reagent, crucibles, and magnesia sand.	AD, RCI, SS, WS	C194, D070, D080, M050, M116, P189	NA
Magnesium perchlorate	Water vapor removal reagent.	FF	C047, C066, C113	NA
Mercuric nitrate	Catalyst used in nitrate operations.	VP1, VP3	M064, D078	D009
Mercury	Contaminant of actinide separation waste, analytical solutions, ash, evaporator sludge, hydroxide cake, and plutonium feed. Component of fluorescent bulbs.	AD, ATL, HG, R8, SSMD, TDC, XO/X0	C023, C095, C176, C196, C197, C200, C207, D029, D078, D080, M153, P109	D009
Mercury	Contaminant of actinide separation waste, analytical solutions, ash, evaporator sludge, hydroxide cake, and plutonium feed. Component of fluorescent bulbs.	AD, ATL, HG, R8, SSMD, TDC, XO/X0	C023, C095, C176, C196, C197, C200, C207, D029, D078, D080, M153, P109	D009

Table 9. Chemical Identification and Use Summary (Continued)

Chemical/Product	Use/Source	P/S Code(s)	Document Source(s)	EPA HWN(s)
Mercury	Contaminant of actinide separation waste, analytical solutions, ash, evaporator sludge, hydroxide cake, and plutonium feed. Component of fluorescent bulbs.	AD, ATL, HG, R8, SSMD, TDC, XO/X0	C023, C095, C176, C196, C197, C200, C207, D029, D078, D080, M153, P109	D009
Metalprep 79 (phosphoric acid-based metal cleaner)	Metal cleaner.	MA	C019, C020, M154	NA
Methanol	Cleaning solvent, diluent, contaminant of cement fixation process. Detected in headspace gas of Pu-238 waste. CLS reagent.	AD, APD, CF, CLS, CW, HP, SO	C023, C092, D007, D076, D078, P067, P070	NA
Methylene chloride	Paint stripper, contaminant of cement fixation, hydroxide cake, and miscellaneous processing (P/S XO/X0). CLS and organoactinide R&D reagent. Component of REZ-N-Bond.	AC, AC1, AC2, AD, APD, ATL, CF, CLS, CW, HP, SA, WM, XO/X0	C027, C092, C200, C214, D007, D032, D077, D078, M174, P080	F001, F002
Methyl ethyl ketone	Degreasing solvent. Detected in headspace gas of Pu-238 waste.	MA, WM, XO/X0	D032, D076, D077	D035, F005
Molybdenum metal/oxide	Metal used in machining operations, fuel elements, salt stripping reagent, and component of Liqui-Moly.	ELW, MA, SS, Various	C014, M028, M172, P052, P056, P148	NA
MolyKote	Silicon-based lubricant used during the hand pressing of oxide pellets.	FF, RS	C102, D029, M154	NA
Neutracleaner #1 and #2	Machining operations cleaner.	MA	C019, M154	NA
Nickel powder	Reactor fuel development sintering aid.	CO	C102, D029, M169	NA
Niobium	Metal used in welding operations, fuel elements, and electrorefining reagent.	SS, WE, Various	M029, P044, P052, P056	NA
Nitric acid	Dissolution and recovery, scrap processing, decontamination, nitrate ion exchange, and cement fixation pH adjustment.	AT, ASP, ATL CF, DS, LR, PPD, PT, RCM, RR, WD, Various	C192, C210, C213, D071, D078, D079, D080, M093, M096, M097, M098, M099, P103, P182, P183, P190	NA
Oakite 90/ruststripper	Caustic metal cleaner.	EL	P033, P034	NA
Octylphenyl di-isobutyl carbamoylmethyl phosphine oxide (CMPO)	Actinide R&D reagent and Liquid-liquid extraction solvent.	AD, APD	C194, C023, P067	NA
Oil (e.g., 3-in-1, Dow Corning 2000, Fomblin Pump, hydraulic, mineral, Texaco Regal 32, and Vactra 2 oil)	Metal preparation, machining, cutting, polishing, and cooling.	BA, MA, ME, PCH, Various	C019, C020, D002, D009, D023, D025, D029, M154, P045, P051	NA
Organicstrip	Non-regulated paint stripper.	XO/X0	D002, D009, D023, D032, D041, M154	NA
Oxalic acid	Laboratory and anion exchange reagent, scrap processing, oxide/pellet dissolution and precipitation, and ATLAS R&D recovery operations reagent.	ASP, ATL, DO, IX, LR, PPD, RFX, Various	C210, D079, D080, M127, M132, P024, P190	NA
Pentane	R&D solvent for actinide chemistry.	SA	P080	NA
Perchloric acid	Actinide R&D and laboratory reagent.	AC, AC1, AC2, AD, Various	C027, P076, P077, P081	NA

Table 9. Chemical Identification and Use Summary (Continued)

Chemical/Product	Use/Source	P/S Code(s)	Document Source(s)	EPA HWN(s)
Phenolphthalein	Reagent (pH indicator).	DS, IX, LR, R8, RFX, Various	C194, D080, M076, M099, P024, P182	NA
Phosphoric acid	Plutonium recovery reagent and component of Metalprep 79.	MA, Various	C019, C020, D002, D029, D041, M154	NA
Platinum	Plutonium recovery operations and actinide R&D reagent. Component of electrodes, filters/screens, fuel element sleeves, and furnace can linings.	AD, CPOD, CXL, EL, IX, LR, MELL, RFX, Various	M011, M053, M067, M086, M092, P024, P026, P042, P076	NA
Polychlorinated Biphenyls (PCBs)	In capacitors of fluorescent light ballasts.	Various	C157, P162	NA
Polyethylene glycol	Fuel fabrication reagent.	CO	D029, D041	NA
Polyoxyethylene-20-sorbitan laurate (surfactant)	Plutonium recovery operations.	Unspecified	D002, D023, D025, D036, D041, M154	NA
Portland cement	Cement fixation and waste packaging absorbent.	CF, HP, Various	C206, D037, D078, M154	NA
Potassium chloride	Electrorefining and molten salt extraction reagent.	OR, PX, RM, SS	D055, M023, M024, M130, M134, M206, P104, P105	NA
Potassium chromate	Dissolution and chloride anion exchange reagent.	CX, DO	C098, M131, M185	D007
Potassium dichromate	Silver nitrate titrations and hydroxide precipitation reagent.	AD, CS, CSE, CW, CX, DO, PB, PUB, PT, SE	C082, D002, D007, D032, M076	D007
Potassium fluoride	Dissolution and leaching operations reagent.	DS, PT	M069, M099	NA
Potassium hydroxide	Caustic scrub solution for thermal decomposition, dissolution, and reactive chemical neutralization.	DO, MP, TDC, Various	C076, M048, M072, M299	NA
Potassium permanganate	Pretreatment, decontamination, and R&D reagent.	AD, Various	C094, D023, D032, P067	NA
Potassium pyrosulfate	Dissolution operations reagent.	AT	M069, M093	NA
Potassium thiocyanate	Dissolution operations reagent.	CPOD, Various	C094, D023, M086	NA
Pyridine	Uranium triiodide reagent, R&D solvent, and contaminate in cement fixation process.	AC, AC1, AC2, CF, SA	D077, P080	D038, F005
Reillex HPQ (polyvinyl pyridine resin)	Dissolution and recovery operations ion exchange resin.	RFX, LR, IX	D010, D030, M154, P024	NA
REZ-N-Bond	Solvent bonding (contains methylene chloride).	FF, ID	M154, M174	F002
Rhenium	Metal used in fuel elements.	Unspecified	P056	NA
Rhodium	Actinide R&D reagent and component of fuel element sleeves.	AD, GPHS, P1	D044, M011, M050	NA
Selenium	Contaminant of liquids, filtrates, ash, hydroxide cake, and analytical solutions.	IS, R8, RC, TDC	C196, C197, C207, D045, D080, M153	D010
SF-2I (3M secondary fluid)	Machining coolant/fluid.	MA	C009, C020, M154	NA

Table 9. Chemical Identification and Use Summary (Continued)

Chemical/Product	Use/Source	P/S Code(s)	Document Source(s)	EPA HWN(s)
Silicone adhesive (e.g., sylgard 184)	Vessel handling and unloading. Compound used in compatibility testing.	SMIS, VUL	D009, M154, M189	NA
Silicone defoamer	Cement fixation reagent.	CF	M154, P152, P153, P183, P185	NA
Silicone lubricant	Metal operations lubricant.	BA	D029, P051	NA
Silver	Contaminant of plutonium feed, hydroxide cake, ash, actinide separation waste, cement fixation inputs, and laboratory reagent.	AC1, ASP, CPOD, EV, EXT, HP, IS, R8, RC, TDC, Various	C027, C038, C039, C192, C196, C197, C207, D075, D078, D080, M086, M153	D011
Silver nitrate	Leaching, solvent extraction, and laboratory reagent.	AT, CPOD, CS, CSE, CW, CX, DO, PB, PUB, SE	D007, C200, D078, M054, M080, M086, M093, M131	D011
Sodium bicarbonate	Dissolution and ash fluorination reagent.	CK, DO, SO	M131, P069, P071	NA
Sodium carbonate	Actinide R&D and plutonium recovery operations reagent.	AD, ER	D045, P078	NA
Sodium chloride	Electrochemical and plutonium recovery operations reagent salt.	CPOD, EDC, RM, SS	D055, M029, M086, M206, P104, P147	NA
Sodium chlorite	Actinide R&D and plutonium recovery operations reagent.	AD, CX	P067, M181	NA
Sodium chromate	Plutonium dissolution and precipitation.	PT	D078, P103	D007
Sodium citrate retarder	Cement fixation reagent.	CF, HP	D078, M154, P008	NA
Sodium dithionate	Actinide R&D and dissolution reagent.	AD, DO	M127, P067	NA
Sodium fluoride	Dissolution operations reagent.	AT	M069, M093	NA
Sodium hydroxide	Cement fixation (pH adjustment), Pu-238 purification, caustic scrubber solution, dissolution, and ATLAS R&D recovery operations reagent.	ASP, ATL, CF, COD, COL, HP, R8, Various	C094, C194, C210, D071, D078, M064, M072, M293, P183, P190	NA
Sodium metal/oxide	Actinide R&D reagent, electrorefining, fuel cladding, sodium bonding, and oxide reduction.	AD, EL, OR, RM, PX, SS	C054, C064, C079, M050, M130, M134, P096	NA
Sodium metaphosphate	Heat source fabrication operations.	R8	C195	NA
Sodium nitrate	Ion exchange, scrap processing, and ATLAS R&D recovery operations reagent.	ASP, ATL	C210, D080, P190	NA
Sodium nitrite	Dissolution, leaching, and ATLAS R&D recovery operations reagent.	AT, ATL, DO	M093, M131, M144	NA
Sodium oxalate	Dissolution and precipitation reagent.	DO, PPD	C079, D079, M048	NA
Sodium pyrophosphate	Sucrose recovery of Pu-238.	R8	C194, D076, D080	NA
Sodium sulfate	Electrolytic decontamination reagent.	ARI, EDC	D011, P147	NA
Sodium tetraborate	Pressure testing reagent.	BT	C083, D011	NA
Stannous chloride	Plutonium recovery reagent.	CXL, PUB	D007, D023	NA
Stearic acid	Fuel production reagent, recovery operations, and component of silicone adhesive.	CO, OB, Various	D002, D023, D029, M154	NA
Sucrose	Sucrose recovery of Pu-238 and microspherical fuel reagent.	FF, R8	D029, C194, D080, M294	NA

Table 9. Chemical Identification and Use Summary (Continued)

Chemical/Product	Use/Source	P/S Code(s)	Document Source(s)	EPA HWN(s)
Sulfuric acid	Peroxide precipitation, dissolution, R&D, Pu-238 recovery from iridium, and ATLAS R&D recovery operations reagent.	AD, ATL, DO, PR, RCI, Various	M103, M125, M151, P078, D080, P190	NA
Tantalum	Metal used in welding operations, fuel elements, and crucibles. Dissolution and electrorefining reagent.	AAP, DO, PUB, SS, WE, Various	M029, P014, P025, P044, P052, P056	NA
Tap Magic	Machining coolant (contains 1,1,1-trichloroethane).	MA	C009, C019, C020, M154	F002
Tetrachloroethylene	Degreasing, cleaning solvent, diluent, contaminant of cement fixation process and hydroxide solids. CLS reagent.	AD, APD, CF, CLS, CSE, CV, CW, HP, SE	C092, C200, D007, D032, D078, P067	D039, F001, F002
Tetraethylamine chloride	Actinide R&D reagent.	AD	D032, P076	NA
Tetraethylammonium hydroxide	Actinide R&D reagent.	AD	D032, P076	NA
Tetrahydrofuran	Synthesis R&D reagent, organoactinide R&D reagent, Np and Pu metal cleaner.	AC, AC1, AC2, SA	C026, C027, D032, P080	NA
Thionyl chloride	Plutonium chlorination reagent.	CV, PTP	D045, P083	NA
Titanium	Metal used in welding operations and electrorefining reagent. Component of electrodes and miscellaneous equipment.	BA, CPOD, MELL, SS, WE	M029, M086, M092, M200, P044, P051	NA
Toluene	Actinide and organoactinide R&D reagent. Detected in headspace gas of Pu-238 waste.	AC, AC1, AC2, SA	C027, D032, D076, P080,	F005
Tributyl phosphate (TBP)	Actinide R&D and hydrothermal processing reagent.	AD, APD	D032, P064, P067	NA
Trichloroethylene	Clean and polish machined parts. Miscellaneous process and hydroxide cake contaminant. Hydrothermal processing and solvent extraction reagent.	AAP, APD, CK, EL, FF, MA, ME, WM, XO/X0, Various	C009, C019, C035, C102, C200, D077, D081, M223, P071, P085	D040, F001, F002
Trioctylphosphine oxide (TOPO)	Plutonium operations reagent and cement fixation contaminate.	CF, HP, Various	C094, D036, P011	NA
Tungsten	Metal used in welding operations and equipment, fuel elements, measure physical properties standard, and electrorefining reagent.	BC, RM, SS, WE, Various	M029, M030, M037, P044, P052, P056	NA
UCAR C-34	Epoxy used for sealing aeroshells.	WD	C192, D080, M154	NA
Urea	Plutonium recovery operations, Pu-238 purification, and ATLAS R&D reagent.	ASP, ATL, DO, DS, IX, LR, RFX, RR, Various	C210, D080, M045, M054, P024, P190	NA
Vacuum grease	Vessel handling and unloading and machining operations reagent.	AAP, PI, SRL, VP2, VUL	M043, M084, M154, M189, P014, P053	NA
Vanadium	Metal used in machining and welding operations.	MA, WE	D029, P148	NA
Vanadium pentoxide	Salt distillation and stripping reagent.	SD, SS	C061, C068, M028, P110	NA
Varian Torr Seal epoxy	Sealing oxide sample containers.	GPHS, P1, PP	M154, P180	NA

Table 9. Chemical Identification and Use Summary (Continued)

Chemical/Product	Use/Source	P/S Code(s)	Document Source(s)	EPA HWN(s)
Vermiculite	Hydrated magnesium-aluminum-iron silicate used to absorb ethylene glycol, suspend oxide power samples, and waste/liquid packaging absorbent.	GPHS, P1, ME, PP, RO, WM	C035, M064, M154, M286, P098	NA
Waste Lock 770	Sodium polyacrylate absorbent material used during remediation/repackaging operations.	Various	C150, M154	NA
WD-40	Vessel handling and unloading.	VUL	M154, M189	NA
Windex	Machining cleaner.	MA	C019, M154	NA
Xylene	CLS, actinide R&D, and metallography operations reagent. Cement fixation contaminant.	ACL, APD, CF, CLS, CW, HP, ME, Various	C092, C094, D007, D032, D078, M164, P033	NA
Yttrium metal/oxide	Mixed with plutonium in MWG processing and electrorefining reagent.	GPHS, P1, PP, SS	D076, D080, M029	NA
Zeolite	Aluminosilicate mineral absorbent material used during pit disassembly and remediation/repackaging operations.	SRL, Various	D011, D029, M154	NA
Zinc chloride	Pyroredox reagent salt.	RA	D002, P029	NA
Zinc stearate	Fuel production anti-sticking reagent.	MOX	C102, D029	NA
Zirconium metal/oxide	Electrorefining reagent and metal used in machining.	ME, SS, Various	D002, D009, D023, M029	NA

Notes :
Some of these chemicals may exhibit the characteristic of ignitability, corrosive, and/or reactivity in their pure form. However, potentially ignitable, corrosive, or reactive materials (e.g., liquids and pressurized containers) identified during RTR and/or VE will be remediated or removed from the waste container prior to shipment to the WIPP. In addition, based on an analysis of the generating operations and waste management practices, no pure or unused chemicals would have been introduced into the debris or homogeneous waste streams.

5.4.3.2 F-, K-, P-, and U-Listed Constituents

Based on review of AK relative to chemicals used or present in the facility and operations potentially contaminating the debris waste, LA-MHD01.001 may contain or be mixed with F-listed hazardous wastes from non-specific sources listed in 40 Code of Federal Regulations (CFR) 261.31, *Identification and Listing of Hazardous Waste* (Reference 15). As shown in Table 9, F001, F002, F003, and F005 listed solvents are utilized and could potentially contaminate the waste. F003 constituents, including acetone, n-butyl alcohol, ethyl ether, methanol, and xylene, are listed solely because these solvents are ignitable in the liquid form. The waste stream does not exhibit the characteristic of ignitability and therefore F003 is not assigned. Waste stream LA-MHD01.001 is assigned F-listed EPA HWNs F001, F002, and F005 for potential 1,1,1-trichloroethane, benzene, carbon tetrachloride, chlorobenzene, Freon TF (1,1,2-trichloro, 1,2,2-trifluoroethane), methylene chloride, methyl ethyl ketone, pyridine, tetrachloroethylene, toluene, and trichloroethylene contamination (References C121, C147, and M310).

At one time, HWN P120 was applied to certain drums generated in 1998 because of the temporary use of vanadium pentoxide for about six months in that year. Based upon investigation into the way the material was handled, this code is not assigned to this waste stream. A P120 assignment would be used only if waste resulted from spillage of this material or from disposal of un-reacted/unspent material. No un-reacted/unspent material was disposed of in TRU waste drums. In addition, no significant spill of this material occurred. If a spill had occurred, suitable records would exist (e.g., incident reports, waste profile forms). The absence of such documentation, coupled with information obtained through interviews of people who worked with the material, indicates that a P120 assignment is not necessary (References C061, C147, M284, and M310).

Beryllium may be present in the waste stream, but does not meet the definition of a P015-listed waste. Available AK did not identify the use of beryllium powder as a constituent in this waste stream. During processing within P/S Codes PU and PUB, beryllium from Pu-Be sources is dissolved with the plutonium in acid, and after dissolution, the beryllium is either precipitated or in the contaminated solution is sent to the RLWTF at TA-50. The precipitate is not included in this waste stream. In some cases, Beryllium turnings are generated during machining operations. However, these turnings are a very low fraction of metal waste that is discarded. The material reclamation process identifies the processing and packaging of Pu-238/beryllium neutron source material. The amount of beryllium material was estimated at approximately two grams per neutron source prior to processing. Based on the description of the process, the beryllium contamination present in the final waste form is expected to be minimal. However, beryllium from metal operations may be present in this waste stream. Containers from these operations that contain greater than one weight percent beryllium will be appropriately identified (References 14, C121, C122, C147, C156, M283, and M310).

Hydrofluoric acid was used or present in the facility and operations potentially contaminating the debris waste; however, a U134 HWN assignment would only be applicable if the waste resulted from a spill or disposal of unused material. There is no documented spill of this material present. In addition, there is no record of unused hydrofluoric acid being disposed of in this waste stream (References C121, C155, D002, and D025).

Waste stream LA-MHD01.001 does not contain and is not mixed with a discarded commercial chemical product, an off-specification commercial chemical product, or a container residue or spill residue thereof. Constituents identified were further researched and a determination was made that waste does not meet the definition of a listed waste in 40 CFR 261.33 (Reference 15). The material in this waste stream is not hazardous from specific sources since it is not generated from any of the processes listed in 40 CFR 261.32 (Reference 15). Therefore, this waste stream is not a K-, P-, or U-listed waste stream (References C121 and C147).

5.4.3.3 Toxicity Characteristic Constituents

Based on review of AK relative to chemicals used or present in the facility and operations potentially contaminating the debris waste, LA-MHD01.001 may be contaminated with toxicity characteristic compounds as defined in 40 CFR 261.24 (Reference 15) as summarized in Table 9. Where a constituent is identified and there is no quantitative data available to demonstrate that the concentration of a constituent is below regulatory threshold levels, the applicable EPA HWN is added to the waste stream. The AK also identified the potential presence of organic toxicity characteristic compounds that are assigned the more specific F-listed EPA HWNs. Although these organic characteristic compounds are covered by the assignment of the F-listed EPA HWNs, the toxicity characteristic EPA HWNs are also assigned to the waste stream for consistency with historical site waste coding. Waste stream LA-MHD01.001 is assigned the following HWNs: D004, D005, D006, D007, D008, D009, D010, D011, D018, D019, D021, D022, D035, D038, D039, and D040 (References C121, C147, and M310).

5.4.3.4 Ignitables, Corrosives, and Reactives

The debris material in waste stream LA-MHD01.001 does not meet the definition of ignitability as defined in 40 CFR 261.21 (Reference 15). Ignitable chemicals (e.g., acetone, hexane) are used or present in the facility and operations potentially contaminating this waste stream. However, D001 (ignitability) does not apply because: (a) the solid waste is not liquid, and verification that there are no prohibited liquids in the debris waste is performed prior to certification; (b) the solid waste does not spontaneously ignite at standard pressure and temperature through friction, absorption of moisture, or spontaneous chemical changes; (c) the solid waste is not an ignitable compressed gas; and (d) there are no oxidizers present that can stimulate combustion. Prior to 1992, some nitrate salts below the DL were not sent to cement fixation for immobilization but were packaged as waste. LANL has determined that these salts do not meet the definition of a DOT oxidizer (i.e., they would not stimulate combustion). However, the salts are being remediated/repackaged in the WCRR Facility with an inert absorbent material (e.g., zeolite, kitty litter). The minimum zeolite or kitty litter to nitrate salts mixture ratio is 1.5 to 1. LANL has determined that nitrate salts, when mixed with zeolite or kitty litter, would further support the managing of the waste as non-ignitable. This determination is based on the results of oxidizing solids testing performed by the Energetic Materials Research and Testing Center. The materials in the waste stream are therefore not ignitable wastes (D001) (References C121, C147, C201, C203, C230, C231, D083, D084, D089, D090, D091, P187, and P198).

The debris material in waste stream LA-MHD01.001 is not liquid and does not contain unreactive corrosive chemicals; therefore, it does not meet the definition of corrosivity as defined in 40 CFR 261.22 (Reference 15). Corrosive chemicals (e.g., hydrofluoric acid, nitric acid, potassium hydroxide, sodium hydroxide) are used or present in the facility and operations potentially contaminating this waste stream. However, D002

(corrosivity) does not apply because the solid waste is not a liquid, and verification that there are no prohibited liquids in the debris waste is performed prior to certification. The materials in the waste stream are therefore not corrosive wastes (D002) (References C121, C147, C194, C200, D071, P181, P182, and P190).

The debris material in waste stream LA-MHD01.001 does not meet the definition of reactivity as defined in 40 CFR 261.23 (Reference 15). Reactive chemicals (e.g., perchloric acid, sodium metal) are used or present in the facility and operations potentially contaminating this waste stream. However, D003 (reactivity) does not apply because the solid waste is stable and will not undergo violent chemical change without detonating. The waste will not react violently with water, form potentially explosive mixtures with water, or generate toxic gases, vapors, or fumes when mixed with water. The waste does not contain reactive cyanide or sulfide compounds. There is no indication that the waste contains explosive materials, and it is not capable of detonation or explosive reaction. The materials in the waste stream are therefore not reactive wastes (D003) (References C121, C147, C201, and C202).

Controls have also been in place to ensure the exclusion of ignitable, corrosive, and reactive constituents. The associated EPA HWNs do not apply to wastes in this waste stream for the following reasons (References D025, D037, D049, D083, P090, P091, P096, P097, P102, and P165):

- Liquids were prohibited from solid waste streams at LANL when the Plutonium Recovery Facility opened in January 1979. A waste management procedure written to cover operations at the new facility, *TA-55 Standard Operating Procedure* (SOP) stated that “Liquids are not permitted in any container of solid waste materials.” Currently, *TA-55 Waste Management,* requires that no liquids be disposed of as a solid waste unless the liquid has been absorbed into some media (like vermiculite) that does not carry a D001 code.

- Chemical Waste Disposal Requests (see Figure 6), introduced in June 1980, included check boxes that the waste generator was required to check if the waste contained corrosive acids or bases, or pyrophoric, flammable, corrosive, explosive, toxic, carcinogenic or highly reactive materials. The Certification Plan and related Generator Attachments were implemented in 1987. Waste generators are required to sign a statement on the WODF documenting that the waste contains “no free liquids, pyrophorics, explosives, compressed gases, powders or materials other than the indicated matrix.” Checkboxes are also present for indicating the presence or absence of corrosive chemicals. Full implementation of this generator statement occurred in May 1987.

- Waste management inspectors perform visual verification of the waste prior to its initial packaging, thus allowing the inspectors to verify the generator’s WODF statement.

- In addition to the above-mentioned prohibitions on explosives in waste, explosives were altogether prohibited until installation of the Impact Test Facility in the early 1990s. In case of a misfire or unconsumed explosives, a procedure is in place to ensure that explosives do not enter the waste stream.

- The Waste Profile Request Form (WPRF), which has been in use at LANL since 1991, includes a statement which is authenticated by the waste generator, that the waste is not ignitable, reactive, or corrosive.

- The Generator Attachments to the Certification Plan were updated in 1995, but the prohibition on liquids in the waste, and the waste management inspection, remained in effect.

- The LANL Project 2010 Certification Plan, and TWIDs prohibit liquids in waste and the absence of liquids is verified by LANL waste management.

- Solutions containing spent non-halogenated solvents are sent to the RLWTF if they are below the DL for plutonium.

- If above the DL, the solutions are sent to aqueous recovery as part of chloride or nitrate operations. Aqueous recovery steps include dissolution of any solid plutonium in hydrochloric or nitric acid, followed by plutonium recovery by ion exchange. The solutions are then below the DL and are either sent to the RLWTF or to the evaporator.

- Rags that are above the DL for plutonium are thermally decomposed, which destroys any organic component.

- Rags that are below the DL for plutonium are discarded as combustible debris, but headspace gas analyses support the contention that the solvents are below the limits established by the WIPP-WAC.

The absence of these prohibited items is verified through RTR and/or VE of each waste container. Any prohibited liquids are absorbed and discarded in an appropriate waste stream and containerized gases that are found to be present are removed before waste certification (Reference D083).

5.4.3.5 Polychlorinated Biphenyls (PCBs)

With the exception of suspect PCB fluorescent light ballasts, no other sources for PCBs in waste stream LA-MHD01.001 were identified in the AK source documents. In the cement fixation operation (P/S Codes CF and HP), oils are sometimes added to drums of cemented waste. They are added to the 55-gallon drums of cement in small quantities (maximum of six liters). The oils are primarily vacuum pump oils, along with

some oils used in heat-treating (cooking or silicone oils) or in grinding. None of these oils are known to contain PCBs. All transformers known to contain PCBs have been tracked from initiation of recovery operations. When any transformer oil is drained, the oil is handled by a subcontractor who is wholly responsible for its disposal; this oil does not enter the LANL disposal operations. Ballasts in fluorescent light fixtures could contain PCBs. These light fixtures are outside the gloveboxes and were not expected to have entered the TRU waste stream. However, characterization activities have identified the presence of light ballasts. Therefore, containers with PCB waste, identified during RTR or VE, will be managed as a Toxic Substances Control Act (TSCA) waste under 40 CFR 761, *Polychlorinated Biphenyls (PCBs) Manufacturing, Processing, Distribution in Commerce and use Prohibitions* (References 18, C096, C147, C157, C201, D080, D083, P012, and P162).

5.4.4 Prohibited Items

5.4.4.1 Compressed Gases, Liquids, Nonradionuclide Pyrophorics, Sealed Containers >Four Liters In Volume, >1 Percent Radionuclide Pyrophorics, and >200 mrem/hr Waste

Most gases used at the PF-4 are stored outside the building and the gas is plumbed into the glovebox from outside the building (Reference C098). Occasionally, a lecture bottle is used for an operation inside the building, but these bottles are kept outside of the glovebox with the gas plumbed into the glovebox. Consequently, compressed gas cylinders or containers are not expected to be in any of the TRU waste streams (References C223 and D025).

Spray cans, especially WD-40, were in common use in gloveboxes until May 1992 (Reference C081). These were routinely discarded as noncombustible debris waste. From 1988 until May 1992, the protocol was to vent or puncture the spray cans inside the glovebox; venting was indicated by inserting a metal wire into the valve. After May 1992, spray cans are no longer used in gloveboxes (References C201, C206, D025, and D083).

Procedures for oxygen sparging and/or carbonate oxidation have been in use since May 1987 to ensure that potential pyrophorics associated with pyrochemical salt waste are oxidized. In addition, screening tests on similar pyrochemical salts and residues (which contained higher amounts of plutonium) at the former Rocky Flats Environmental Technology Site showed (1) no autoignition, (2) no spontaneous combustion, and (3) no sparking. Experimental results on the reactivity of DOR salt with water and the reactivity in air of heated calcium metal nodules from DOR salts indicate the absence of “dangerous when wet materials” and pyrophoricity in these salts (References C064, C065, C202, C203, D025, D084, P125, and P187).

Chemical Waste Disposal Requests dated as early as June 1980 included boxes that were required to be checked if the waste contained pyrophoric, flammable, corrosive, or explosive materials (see Figure 6) (Reference D083).

In addition, for wastes generated after the implementation of the 1987 Certification Plan, associated waste packaging procedures, and quality assurance systems, the waste generator has signed a statement on the WODF for each waste item stating that waste contains “no free liquids, pyrophorics, explosives, compressed gases, powders or materials other than the indicated matrix.” The Attachments to the Certification Plan describe how these restrictions are verified by waste management personnel (References D025 and P090).

The Project 2010 Certification Plan, and the TWIDS prohibit compressed gases, liquids, nonradionuclide pyrophorics, sealed containers greater than four liters in volume, or >1 percent radionuclide pyrophorics in waste and verified by waste management (Reference D025).

Based on interviews with site personnel performing VE and prohibited item disposition repackaging, internal cans (both shielded and unshielded) have been measured for dose rate during repackaging and found to contain waste with radiation levels exceeding 200 mrem/hr (References C135 and C136).

5.4.4.2 Remediation of Prohibited Items

Prohibited items are known to be present. Procedures allowed containers greater than four liters, sealed with tape, to be used for waste packaging until WIPP certification procedures were implemented. The presence of containerized (e.g., butane lighter, lighter fluid can, unpunctured aerosol cans, vials) and uncontainerized liquids have also been observed. Lead shielding is often used to increase handling safety, and thick shielding can obscure RTR observations (References D025, D083, and DR029).

Prohibited items are detected by RTR or VE and reported with the characterization results. Waste containers with prohibited items are segregated then dispositioned appropriately and/or repackaged into new drums, during which time liquids are absorbed, sealed containers greater than four liters are opened, and other items removed and segregated if necessary prior to certification and shipment. Waste items with a high dose rate may be repackaged into a POC. Repackaged waste items that are placed into a new drum(s) or POC are from a single parent drum. Some secondary waste generated during remediation and repackaging operations may be added to the waste containers, including but not limited to: absorbent (e.g., Waste Lock 770), alkaline batteries, Fantastik bottles used during decontamination, miscellaneous hand tools, paper/plastic tags and labels, plastic/metal wire ties, PPE, plastic sheeting used for contamination control, rags and wipes (Kimwipes), and original packaging material (e.g., metal, plastic bags, plywood sheathing, rigid liner lids cut into pieces) (References C150, C177, D025, D083, M316, P154, P158, P159, P175, P192, and P203).

5.5 Waste Packaging

Waste packaging procedures for waste streams have been modified several times since the beginning of plutonium operations in PF-4 and containers in this waste stream include a variety of configurations with up to six layers of confinement. It is expected that debris waste from waste management operations generated between 1979 and 1995 would usually be packaged into a U.S. Department of Transportation (DOT) 7A, Type A 55-gallon steel drum, including either up to two 5-mil to 12-mil plastic liner bags closed with tape, or one 90-mil/125-mil rigid polyethylene liner with lid. Waste could also be packaged in vented 30-gallon drums or into in-line 30-gallon drums attached to a glovebox in the waste management room, and later overpacked into 55-gallon drums. Larger waste items and remediated/repackaged waste may be packaged in unlined SWBs with appropriate materials, such as Styrofoam sheets, wooden pallets, or plastic materials to prevent them from shifting (References C056, D025, P090, D084, P179, P188, P192, and P195).

Since 1995, several changes have been introduced to the packaging procedures. Up to two plastic liner bags could still be present, but they are typically closed by folding, not by taping. Waste can also be packaged in a rigid polyethylene drum liner contained in a bag-out bag which is then placed in a 55-gallon drum lined with plastic liner bag. All waste containers (i.e., 55-gallon drums, SWBs) are vented with approved filter vents prior to disposal (e.g., Nucfil-013). Since 1997, plastic bags with filters are typically used. Waste with the potential to tear the plastic bag, such as broken glass, is first placed in a metal container with a slip-top (also referred to as a slip-fit) lid, taped closed, and then placed into the plastic bag. Larger waste items with sharp edges are properly taped or otherwise rendered blunt. Waste with a dose rate greater than 75 mrem/hr is placed in a lead or a tin alloy shielded container prior to packaging. Waste could also be packaged or repackaged in a POC. Waste placed into a POC may be packaged into a single filtered plastic bag which may include a fiberboard liner/sleeve inside the plastic bag. POCs contain a pipe component in a standard 55-gallon steel drum that is lined with a punctured rigid liner with packing material between the pipe component and liner. POCs are closed once predetermined SNM or weight limits are met or when the pipe component is physically full.

Remediated/repackaged waste may be packaged with or without a single plastic liner bag with one of the following drum configurations depending on the remediation facility: no liner, a fiberboard liner, a POC, or a 90-/125-mil rigid polyethylene liner without lid (References C062, C149, D025, D084, D085, P091, P159, P164, P166, P167, P168, P169, P175, P178, P192, and P195).

This waste stream is primarily generated from operations performed in gloveboxes. The waste material is placed directly into bag-out bags (also called inner bags) through an opening in the glovebox where the bag is attached, and the bag is then closed and detached from the glovebox. Waste may also be packaged into a stainless-steel dressing jar, a slip-top can, and/or an unsealed metal container before it is placed into

the bag-out bag. Once removed from the glovebox line, the bagged out container(s) may also be put into a secondary stainless-steel slip-top container. TRU waste is sometimes generated from “hot jobs” outside of the glovebox, such as valve changes, or from decontamination of spills or other releases. In these cases, the waste is placed directly into one (or possibly more) inner bag at the work area. All inner bag closures are by twist-and-tape method or the twist, tie, and tape method (References D025, D084, M074, M076, P155, P156, P157, and P160).

A minor source of waste in this waste stream is room trash that was originally considered to be LLW, which is collected in plastic bags inside cardboard boxes. Occasionally, when assayed, these boxes are determined to be TRU waste. These boxes may be sorted to remove the “hot” item, or the whole box may be bagged and sent to the TRU packaging area for placement in drums. When this occurs, the P/S Code WM is assigned to the waste. Due to the additional layers of plastic that may be present when this operation occurs, drums with the P/S Code WM are assumed to contain one more layer of internal packaging than other drums (References C056, C188, D025, and D084).

Generally, lesser quantities of homogeneous waste materials present in this waste stream are visually examined prior to waste packaging. If necessary, the material may be placed under a heat lamp, in a vacuum, on a hot plate, or in a furnace to further reduce the moisture content. TRU liquids are absorbed with an absorbent such as vermiculite prior to packaging. The minimum absorbent to liquid ratio is 3 to 1. After the liquid is absorbed in vermiculite, the waste is hand squeezed with a rubber glove. If any liquid is observed on the surface of the glove or the waste, more vermiculite is added and the hand squeezing is repeated until the waste appears dry. The homogeneous waste materials are then bagged out of the glovebox as described above (References M074, M076, P155, P156, P157, P161, and P162).

RTR and/or VE will confirm TRUCON code LA125/225. LA125/225 describes the broadest type of materials and bounds all waste packages in this waste stream. However, TRUCON codes LA115/215, LA116/216, LA117/217, LA118/218, LA119/219, LA122/222 (Reference P173), and LA123/223 have been identified as suitable TRUCON codes for individual containers in this waste stream. For high wattage drums, TRUCON codes LA154 or SQ154 may also be used for shipping. In addition, TRUCON code SQ133/233 is used for containers that include greater than one percent by weight beryllium. These TRUCON codes may be assigned for the eventual certification and transportation of payload containers in this waste stream pending further evaluation by the Waste Certification Official of container- specific information (References 9, 14, D025, D084, and M296).

During waste management and drum storage activities following initial waste generation, 55-gallon drums have been overpacked into larger drums (i.e., 85-gallon drums or larger) or SWBs to correct/address external contamination, fissile gram equivalent (FGE) limits, and drum integrity problems such as pin hole corrosion, dents, etc. If drums are overpacked in an SWB (up to four 55-gallon drums), no closed liner bags are used in the SWB. In addition, CMBs may be modified, vented, and packaged into TDOPs (References D018, D024, D068, M222, P092, P098, P117, P158, P166, P167, P203, and P204).

This waste stream includes containers originally assigned to waste stream LA-CIN01.001 that contain greater than 50 percent debris material by volume (Reference DR044). Therefore, containers in this waste stream may be packaged in configurations described in Section 6.5 (e.g., packaged in lead shielded cans and drums).

Vent dates for individual containers are provided in the AK Tracking Spreadsheet (References C002 and M220).

6.0 REQUIRED WASTE STREAM INFORMATION: LA-CIN01.001

This section presents the mandatory waste stream AK required by the WIPP-WAP (Reference 1). Attachment 1 of CCP-TP-005 (Reference 8) provides a list of the TRU waste stream information required to be developed as part of the AK record.

6.1 Area and Building of Generation

All of the cemented TRU waste covered by this report originated from the TA-55 R&D/fabrication and associated recovery, facility and equipment maintenance, D&D, waste repackaging, and below-grade retrieval operations described in Section 4.4. Container-specific records are reviewed for each container to verify the physical composition and origin of the waste stream inventory (References C138, M222, M236, and M238).

6.2 Waste Stream Volume and Period of Generation

Waste stream LA-CIN01.001 is mixed cemented TRU waste generated from 1979 to present. Table 10, LA-CIN01.001 Approximate Waste Stream Volume, summarizes the current volume of this waste stream. Of the 2,828 containers in this waste stream, 78 are presently in below-grade retrievable storage at TA-54, Area G. The projected volume of retrievably stored below-grade containers may change based on the radiological characteristics and the condition of the containers. The future projection of additional generation of this waste stream is approximately 13 cubic meters per year. There is no projected end date for the termination of operations that generate this waste stream (References C138, C140, C180, C232, C234, D041, M236, and M238).

Table 10. LA-CIN01.001 Approximate Waste Stream Volume

Containers	Volume (cubic meters)
12 30-gallon drums	1.36
2,086 55-gallon drums (includes POCs)	438.06
718 85-gallon drums	229.76
8 110-gallon drums	3.36
2 SWB	3.33
2 Other Containers	0.84
2,828 Total	677.11

6.3 Waste Generating Activities

Cemented TRU waste is generated by or originated from materials used during TA-55 R&D/fabrication and associated recovery, facility and equipment maintenance, D&D, waste repackaging, and below-grade retrieval operations described in detail in Section 4.4 and includes (References D041 and D083):

- Preparing ultra-pure plutonium metals, alloys, and compounds
- Preparing (on a large scale) specific alloys, including casting and machining these materials into specific shapes
- Determining high-temperature thermodynamic properties of plutonium
- Reclaiming plutonium from scrap and residues produced by numerous feed sources
- Disassembling components for inspection and analysis
- Manufacturing of parts on a limited basis
- Processing mixtures of plutonium and uranium oxides for reactor fuels
- Pu-238 generator and heat source R&D, fabrication, testing, and recycling

6.4 Type of Wastes Generated

This section describes the process inputs, Waste Matrix Code assignment, WMPs, radionuclide contaminants, and RCRA hazardous waste determinations for waste stream LA-CIN01.001. The waste stream is characterized based on knowledge of the materials, knowledge of the operations generating the waste, and physical descriptions of the waste.

6.4.1 Material Input Related to Physical Form

Waste stream LA-CIN01.001 consists primarily of inorganic homogeneous solid waste (cemented TRU waste) generated in TA-55. The waste includes materials encased in Portland or gypsum cements such as aqueous and organic liquids from the six operational areas (e.g., nitrate operations), ash, calcium chloride salts, chloride solutions, evaporator bottoms and salts, filter aid, filter cakes (e.g., hydroxide cake), plutonium/uranium filings and fines, glovebox sweepings, graphite powder, HEPA filter media, leached ash residues, leached particulate solids (e.g., ash, sand, slag, and crucible parts), oxides (e.g., americium, metal, and uranium), miscellaneous oils (e.g., pump oil), silica solids, solvents, spent ion exchange resins, trioctyl

phosphineoxide and iodine in kerosene, and uranium solutions. A small fraction of debris waste (less than 50 percent by volume) including plastic packaging, metal packaging, and PPE (e.g., leaded gloves) may also be present. Finally, some secondary waste generated during remediation/repackaging operations may be added to the waste containers, including but not limited to: absorbent (e.g., Waste Lock 770 [sodium polyacrylate]), alkaline batteries, Fantastik bottles used during decontamination, miscellaneous hand tools, paper/plastic tags and labels, plastic/metal wire ties, PPE, plastic sheeting used for contamination control, rags and wipes (Kimwipes), and original packaging material (e.g., metal, plastic bags, plywood sheathing, rigid liner lids cut into pieces) (References C150, C171, C177, DR043, D041, D050, D080, D083, and M316).

6.4.1.1 Waste Matrix Code

Based on the evaluation of the materials contained in this waste stream and LANL waste management practices, this waste stream is comprised of greater than 50 percent by volume of cemented TRU waste. Therefore, Waste Matrix Code S3150, solidified homogeneous solid waste is assigned to waste stream LA-CIN01.001 (References 2, C138, D041, D083, M222, M236, and M238).

6.4.1.2 Waste Material Parameters

The WMPs for waste stream LA-CIN01.001 were based on the descriptions of waste packaged into 2,470 containers. This waste stream is greater than 50 percent by volume of cemented TRU waste (References C138, D041, D083, and M222).

The WMPs for waste stream LA-CIN01.001 were estimated by reviewing the waste container inventory records for 2,470 containers packaged from 1979 through 2006. The waste container inventory provides a volume for waste materials packaged. By far the predominant WMP was solidified inorganic and organic material. However, from 1979 through 1987, the solidified matrix was packaged into one-gallon steel cans. These cans were considered mixing containers and not layers of confinement. Therefore, the cans were considered part of the waste. From 1988 through 2006, the concrete was mixed as a monolith in a rigid polyethylene liner inside the 55-gallon drum. As with the one-gallon cans, LANL considered the liner a mixing container and not a layer of confinement. Therefore, the liner was also considered part of the waste for WMP purposes. These calculations conclude that the relative waste weight percentages for organic waste materials (primarily rigid polyethylene liners) and inorganic waste materials (primarily solidified inorganic and organic materials and one-gallon cans) for waste stream LA-CIN01.001 are 0.61 percent and 99.39 percent, respectively. The results of the assessment are presented in Table 11, Waste Stream LA-CIN01.001 Waste Material Parameter Estimates.

The statistical analysis of the data is documented in a memorandum (included with Attachment 6) as required by CCP-TP-005 (Reference 8).

Table 11. Waste Stream LA-CIN01.001 Waste Material Parameter Estimates

Waste Material Parameter	Avg. Weight Percent	Weight Percent Range
Iron-based Metals/Alloys	3.43%	0.0 – 97.29%
Aluminum-based Metals/Alloys	0.00%	0.0 – 0.0%
Other Metals	0.00%	0.0 – 0.0%
Other Inorganic Materials	0.00%	0.0 – 0.0%
Cellulosics	0.00%	0.0 – 0.0%
Rubber	0.00%	0.0 – 0.0%
Plastics (waste materials)	0.61%	0.0 – 3.31%
Organic Matrix	0.00%	0.0 – 0.0%
Inorganic matrix (solidified inorganic and organic materials)	95.96%	2.71 – 98.99%
Soils/Gravel	0.00%	0.0 – 0.0%
Total Organic Waste Avg.	**0.61%**	
Total Inorganic Waste Avg.	**99.39%**	

6.4.2 Radiological Characterization

6.4.2.1 Pu-238, Pu-239, Pu-240, Pu-241, and Pu-242

The primary plutonium material type inputs for the plutonium recovery process are listed in Section 5.4.2.2, Table 3. However, other MTs are occasionally introduced as feed material. The assignment of MTs is used to describe the isotopic composition of common blends of radioactive materials used within the DOE complex (References C186, C194, C209, C219, C222, D025, D073, D074, D076, D080, D083, M222, M283, M295, and M309).

Recovery operations are not expected to alter the plutonium isotopic ratios of the feed material. The material type used in the operation generating each waste item is documented on generator records; however, cross-contamination of equipment with different material types can lead to variable material types detected by radioassay (References D025, M222, M236, and M238).

The primary MT that feeds into the Pu-238 operations described in this report is heat source grade plutonium (MT 83), and these operations are not expected to alter the plutonium isotopic ratios of the feed material. Section 5.4.2.2, Table 3, identifies the isotopic distribution of MT 83 based on 100 isotopic analyses which were decay corrected assuming the material was not chemically separated for 45 years (References C125, C186, C194, C209, C219, C222, D073, D074, D076, D080, D083, M283, M295, and M309).

6.4.2.2 U-233, U-234, U-235, and U-238

U-233 and U-238 are not normally components of the plutonium MTs handled at PF-4. U-235 is present from the decay of Pu-239 only at 0.1 percent by weight of the total plutonium content. However, all three isotopes have been introduced as special material. In addition, uranium-plutonium oxide mixtures have been processed to recover the plutonium. Significant quantities of U-234 will be present from the decay of Pu-238 in waste originating from heat source plutonium operations (References C222, D025, and D076).

In general, uranium and its isotopes are expected to be present only at trace levels, if at all, if the feed material did not purposely contain uranium. However, some reactor fuel development, uranium-plutonium separation, and pit disassembly operations have uranium material as the feed material. The primary uranium MT inputs are listed in Section 5.4.2.2, Table 4 (Reference D080).

U-234 content must be estimated since this isotope cannot be reliably measured using NDA techniques (Reference C001). The MT provides the basis for estimating an upper bound for U-234 based on the rate of decay of the precursor, Pu-238, and the assumption that there is no other source of uranium in the waste material. The content of U-234 in the Pu-239 MTs is calculated as the sum of the contributions expected from decay of Pu-238 and from uranium input to the operation, with the value of 0.014 conservatively used for the ratio of abundances of U-234 to U-235 in typical uranium MTs. The standard uranium MTs provide an estimate of the ratio of U-234 to U-235 where one of the MTs listed in Section 5.4.2.2, Table 4, is an indicated MT in the waste container (References D025 and D083).

6.4.2.3 Am-241

AK on the MT inputs provides the basis for estimating an upper bound for Am-241 content based on the rate of decay of the precursor, Pu-241. The purpose of such bounding calculations is to provide a basis for identifying significant enrichment or depletion of Am-241 based on radioassay results for individual waste containers. The calculations assume that (a) none of these isotopes were initially present in the material, (b) the oldest plutonium material in inventory dates back to January 1, 1960, and (c) the legacy waste was packaged on January 1, 1996, making it 36 years old at that time. In general, wastes from the plutonium recovery process are enriched with Am-241, because a primary intent of the recovery process is to reduce the americium content of the retained plutonium (References C222, D025, and D083).

No correlation is expected among the different radioelements, Pu, Np, U, Pa, or Am. The differences in valence states and chemical affinities among these elements are expected to result in substantial fractionation during several recovery operations, including ion exchange, solvent extraction, hydroxide precipitation, and dissolution (References D025 and D083).

6.4.2.4 Other Radionuclides Present Due to Decay

Other radionuclides will be present in most of the wastes from the decay of a plutonium isotopic precursor or as a contaminant in the feed material. Refer to Section 5.4.2.4 for a discussion of Np-237, Am-243, Pa-231, and Ac-227 decay products (References C067, C073, C208, C209, D025, D080, and D083).

6.4.2.5 Cs-137 and Sr-90

Cs-137

Cs-137 is a product of the spontaneous fission of Pu-238, Pu-239, and especially Pu-240. Cs-137 is also a trace contaminant in purified plutonium from the production reactors (References C067 and C073). In the latter case, the remaining cesium could be on the order of 0.5 ng/g plutonium. In the former instance, the formation of Cs-137 due to spontaneous fission would lead to about 0.4 pg/g plutonium in plutonium that is ten years old. Because Cs-137 due to spontaneous fission is about a factor of a thousand less than that due to residual contamination from the original separation on the production fuel, the latter is the dominant source of cesium in waste (References C208, C209, D025, and D083).

Sr-90

Based on interviews with an SME, no spent nuclear fuel or other material containing Sr-90 were introduced into the TRU waste streams (Reference C076). No references or procedures related to spent fuel processing were located in the AK investigation of records. No generator documents (WODF, DWLS, TWSR, and WPF) identified spent fuel or Sr-90 as inputs or as present in the waste. During review of WPFs and database records from the waste storage facility (TA-54), use of material containing Sr-90 was not identified (References C139 and C208). However, because of the requirement that an estimate of Sr-90 content be made, the following approach is taken. In plutonium production runs, Cs-137 and Sr-90 are produced at approximately the same level. These two nuclides have very similar half-lives (~ 30 y) and will therefore be present at roughly the same activity level prior to commencement of any processing operations. If it is assumed that strontium and cesium are not fractionated from one another during chemical processing, Cs-137 may be used as a marker for Sr-90 activity at a ratio of 1:1 (References D025 and D083).

6.4.2.6 Other Radionuclides Introduced as Feed Material

Refer to Section 5.4.2.6 and Table 5 for a discussion of secondary radionuclides that are also present in this waste stream due to operations involving feed materials other than plutonium. The list of radionuclides includes Ac-227, Am-241, Am-243, Ce-144, Cm-244, Np-237, Pa-231, Pu-238, Th-230, Th-232, U-233, U-235, and U-238 (References C067, C076, C108, D025, and D083).

6.4.2.7 Estimated Predominant Isotopes and 95 percent Total Activity

Radionuclide data established by the PF-4 waste generator on a container basis and container data from the Area G waste storage records were evaluated to determine the relative radionuclide weight and activity for waste stream LA-CIN01.001. This evaluation was performed using the combined data for all containers in this waste stream. From this evaluation, the two predominant isotopes for the waste stream are Pu-239 and U-238, while over 95 percent of the total activity in the waste stream is from Am-241, Pu-238, Pu-239, and Pu-241. It should be noted that although U-238 is the most prevalent radionuclide by mass in the waste stream, U-238 was reported in only 204 containers. Table 12, Estimated Radionuclide Distribution in LA-CIN01.001, identifies the relative radionuclide weight and activity percent of expected radionuclides over the entire waste stream based on the container data evaluated. As illustrated in Table 12, the radionuclide weight percent of individual radionuclides varies greatly on a container-by-container basis. Because of this variability in container loadings, some containers will not contain the waste stream predominant radionuclides but may contain other radionuclides expected in this waste stream (References C133, C139, C180, C232, C234, D041, and M307).

6.4.2.8 Use of Radionuclide Isotopic Ratios

For waste containers where direct measurement does not yield useable isotopic ratio information, AK may be used to supplement direct measurement data in accordance with the WIPP-WAC (Reference 3). The ratios that may be used are those identified in Section 5.4.2.2, Tables 3 and 4, in conjunction with the corresponding nuclear material type identified by the waste generator on a container basis. The specific use and confirmation of AK related to WIPP-certified assay measurements of containers in this waste stream is documented in the memorandum written in accordance with the requirements of CCP-TP-005 (Reference 8).

Table 12. Estimated Radionuclide Distribution in LA-CIN01.001

Radionuclide	Total Nuclide Weight%[1,5]	Total Nuclide Curie%[2,5]	Nuclide Wt% Range for Individual Containers[3,5]			Nuclide Ci% Range for Individual Containers[4,5]			Expected Present
WIPP Required Radionuclides									
Am-241	0.60%	**31.62%**	0	-	98.22%	0	-	99.85%	Yes
Pu-238	0.01%	**3.61%**	0	-	86.52%	0	-	98.74%	Yes
Pu-239	**9.82%**	**9.36%**	0	-	96.42%	0	-	37.04%	Yes
Pu-240	0.74%	2.57%	0	-	20.66%	0	-	4.88%	Yes
Pu-242	0.08%	Trace	0	-	92.08%	0	-	0.21%	Yes
U-233	Trace	Trace	0	-	52.74%	0	-	3.71%	Yes
U-234	Trace	Trace	0	-	0.74%	0	-	0.09%	Yes
U-238	**87.51%**	Trace	0	-	99.68%	0	-	0.10%	Yes
Sr-90	Trace	Trace	0	-	Trace	0	-	Trace	Yes
Cs-137	Trace	Trace	0	-	Trace	0	-	Trace	Yes
Additional Radionuclides									
Am-242	Trace	0.01%	0	-	Trace	0	-	22.82%	Yes
Am-243	Trace	Trace	0	-	1.36%	0	-	0.98%	Yes
Bk-249	Trace	Trace	0	-	Trace	0	-	Trace	Yes
Cd-109[6]	Not Reported								Yes
Ce-144[6]	Not Reported								Yes
Cf-249	Trace	Trace	0	-	Trace	0	-	Trace	Yes
Cm-244[6]	Not Reported								Yes
Na-22[6]	Not Reported								Yes
Np-237	Trace	Trace	0	-	4.63%	0	-	0.01%	Yes
Np-239[6]	Not Reported								Yes
Pa-231[6]	Not Reported								Yes
Pu-241	0.03%	**52.83%**	0	-	3.01%	0	-	93.99%	Yes
Pu-244	Trace	Trace	0	-	0.02%	0	-	Trace	Yes
Th-228	Trace	Trace	0	-	Trace	0	-	Trace	
Th-230[6]	Not Reported								Yes
Th-232	0.83%	Trace	0	-	94.84%	0	-	Trace	Yes
U-235	0.48%	Trace	0	-	74.54%	0	-	Trace	Yes
U-236	Trace	Trace	0	-	0.35%	0	-	Trace	Yes

1. This listing indicates the total weight percent of each radionuclide over the entire waste stream.
2. This listing indicates the total activity (curie) percent of each radionuclide over the entire waste stream.
3. This listing is the weight percent range of each radionuclide on a container-by-container basis.
4. This listing is the curie percent range of each radionuclide on a container-by-container basis.
5. “Trace” indicates <0.01 weight or activity percent for that radionuclide.
6. Radionuclides not reported but suspected present from secondary radionuclides or decay.

6.4.3 Chemical Content Identification – Hazardous Constituents

Waste stream LA-CIN01.001 has historically been managed in accordance with the generator site requirements and in compliance with the requirements of the New Mexico Environmental Department. Based on historical waste management and LANL's TRU Program (reference LANL waste stream LAMIN01-CIN), the containers in this waste stream were managed as hazardous and assigned the same EPA HWNs as the debris waste including arsenic (D004), barium (D005), cadmium (D006), benzene (D018), carbon tetrachloride (D019), chlorobenzene (D021), chloroform (D022), methyl ethyl ketone (D035), pyridine (D038), tetrachloroethylene (D039), trichloroethylene (D040), and F-listed solvents (F001, F002, F003, and F005). A review of available AK documentation has determined that this waste is hazardous for the above constituents, and with the exception of F003, the HWNs were retained. HWN F003 was not assigned because the waste stream does not exhibit the characteristic of ignitability. The following sections describe the characterization rationale for the assignment of EPA HWNs. Table 13, Waste Stream LA-CIN01.001 Hazardous Waste Characterization Summary, summarizes the EPA HWNs assigned to this waste stream. The HWN assignments have been applied on a waste stream basis; individual containers may not contain all of the hazardous materials listed for the waste stream as a whole (References C121, C147, and D083).

Table 13. Waste Stream LA-CIN01.001 Hazardous Waste Characterization Summary

Waste Stream	EPA HWNs
LA-CIN01.001	F001, F002, F005, D004, D005, D006, D007, D008, D009, D010, D011, D018, D019, D021, D022, D035, D038, D039, and D040

Chemical constituents of inputs are compiled from chemical lists contained in procedures and from SME input. In this section, discussion of the chemical inputs is divided into the following categories (References C121, C147, and C197):

- Process feed materials
- Chemical Identification and Use

Section 5.4.3, Table 8, provides a summary of the special nuclear material feed materials processed by the operations described in this report.

6.4.3.1 Chemical Inputs

To assign EPA HWNs, the available AK documentation is reviewed to assess chemical usage in the TA-55 PF-4 operations contributing to waste stream LA-CIN01.001, and potentially hazardous materials that may have been introduced into the waste stream. In addition, MSDSs are obtained for the commercial products to determine the presence of potentially regulated compounds. As described in Section 5.4.3.1, Table 9, several of

the HWNs are assigned due to lack of analytical evidence that these constituents have not exceeded the regulatory thresholds. The chemical inputs identified in Table 9 are used during TA-55 R&D/fabrication and associated recovery, facility and equipment maintenance, D&D, waste repackaging, and below-grade retrieval operations. This waste is comprised of cemented liquids and residues that are generated by these operations. Therefore, these constituents have the potential to contaminate this waste stream.

6.4.3.2 F-, K-, P-, and U-Listed Constituents

Based on review of AK relative to chemicals used or present in the facility and operations potentially contaminating the cemented TRU waste, LA-CIN01.001 may contain or be mixed with F-listed hazardous wastes from non-specific sources listed in 40 CFR 261.31 (Reference 15). As shown in Section 5.4.3.1, Table 9, F001, F002, F003, and F005 listed solvents are utilized and could potentially contaminate the waste. F003 constituents, including acetone, n-butyl alcohol, ethyl ether, methanol, and xylene, are listed solely because these solvents are ignitable in the liquid form. The waste stream does not exhibit the characteristic of ignitability and therefore F003 is not assigned. Waste stream LA-CIN01.001 is assigned F-listed EPA HWNs F001, F002, and F005 for potential 1,1,1-trichloroethane, benzene, carbon tetrachloride, chlorobenzene, Freon TF (1,1,2-trichloro, 1,2,2-trifluoroethane), methylene chloride, methyl ethyl ketone, pyridine, tetrachloroethylene, toluene, and trichloroethylene contamination (References C121, C147, and D083).

At one time, HWN P120 was applied to certain drums generated in 1998 because of the temporary use of vanadium pentoxide for about six months in that year. Based upon investigation into the way the material was handled, this code is not assigned to this waste stream. A P120 assignment would be used only if waste resulted from spillage of this material or from disposal of un-reacted/unspent material. No un-reacted/unspent material was disposed of in TRU waste drums. In addition, no significant spill of this material occurred. If a spill had occurred, suitable records would exist (e.g., incident reports, waste profile forms). The absence of such documentation, coupled with information obtained through interviews of people who worked with the material, indicates that a P120 assignment is not necessary (References C061, C147, and D083).

Beryllium may be present in the waste stream, but does not meet the definition of a P015-listed waste. Available AK did not identify beryllium powder as a constituent in this waste stream. During processing within P/S Codes PU and PUB, beryllium from Pu-Be sources is dissolved with the plutonium in acid, and after dissolution, the beryllium is either precipitated or in the contaminated solution is sent to the RLWTF at TA-50. The precipitate is not included in this waste stream. Beryllium from metal operations, in general, is in the form of classified shapes and is therefore not in this waste stream. In some cases, beryllium turnings are generated during machining operations. However, these turnings are not expected to be in this homogeneous waste

stream. The beryllium contaminated waste from the material reclamation process was debris and would also not be in this waste stream. Individual containers in waste stream LA-CIN01.001 will contain less than one weight percent beryllium (References 14, C121, C122, C147, C156, and M283).

Hydrofluoric acid was used or present in the facility and operations potentially contaminating the cemented TRU waste; however, a U134 HWN assignment would only be applicable if the waste resulted from a spill or disposal of unused material. There is no documented spill of this material present. In addition, there is no record of unused hydrofluoric acid being disposed of in this waste stream (References C121, C155, D002, and D025).

Waste stream LA-CIN01.001 does not contain and is not mixed with a discarded commercial chemical product, an off-specification commercial chemical product, or a container residue or spill residue thereof. Constituents identified were further researched and a determination was made that waste does not meet the definition of a listed waste in 40 CFR 261.33 (Reference 15). The material in this waste stream is not hazardous from specific sources since it is not generated from any of the processes listed in 40 CFR 261.32 (Reference 15). Therefore, this waste stream is not a K-, P-, or U-listed waste stream (Reference C121).

6.4.3.3 Toxicity Characteristic Constituents

Based on review of AK relative to chemicals used or present in the facility and operations potentially contaminating the cemented TRU waste, LA-CIN01.001 may be contaminated with toxicity characteristic compounds as defined in 40 CFR 261.24 (Reference 15) as summarized in Section 5.4.3.1, Table 9. Where a constituent is identified and there is no quantitative data available to demonstrate that the concentration of a constituent is below regulatory threshold levels, the applicable EPA HWN is added to the waste stream. The AK also identified the potential presence of organic toxicity characteristic compounds that are assigned the more specific F-listed EPA HWNs. Although these organic characteristic compounds are covered by the assignment of the F-listed EPA HWNs, the toxicity characteristic EPA HWNs are also assigned to the waste stream for consistency with historical site waste coding. Waste stream LA-CIN01.001 is assigned the following HWNs: D004, D005, D006, D007, D008, D009, D010, D011, D018, D019, D021, D022, D035, D038, D039, and D040 (References C121, C147, D050, and D083).

6.4.3.4 Ignitables, Corrosives, and Reactives

The homogeneous material in waste stream LA-CIN01.001 does not meet the definition of ignitability as defined in 40 CFR 261.21 (Reference 15). Ignitable chemicals (e.g., acetone, hexane) are used or present in the facility and operations potentially contaminating this waste stream. However, D001 (ignitability) does not apply to because: (a) the solid waste is not liquid, and verification that there are no prohibited

liquids in the waste is performed prior to certification; (b) the solid waste does not spontaneously ignite at standard pressure and temperature through friction, absorption of moisture, or spontaneous chemical changes; (c) the solid waste is not an ignitable compressed gas; and (d) there are no oxidizers present that can stimulate combustion. For example, evaporator salts (i.e., nitrate salts) solidified/stabilized in cement would not stimulate combustion and; therefore, would not meet the definition of an oxidizer. The materials in the waste stream are therefore not ignitable wastes (D001) (References C121, C147, C201, C203, D071, D083, P096, P102, and P187).

The homogeneous material in waste stream LA-CIN01.001 is not liquid and does not contain unreactive corrosive chemicals; therefore, it does not meet the definition of corrosivity as defined in 40 CFR 261.22 (Reference 15). Corrosive chemicals (e.g., hydrofluoric acid, nitric acid, potassium hydroxide, sodium hydroxide) are used or present in the facility and operations potentially contaminating this waste stream. However, D002 (corrosivity) does not apply because the solid waste is not a liquid, and verification that there are no prohibited liquids in the waste is performed prior to certification. The materials in the waste stream are therefore not corrosive wastes (D002) (References C121, C147, C194, D071, D083, P096, and P102).

The homogeneous material in waste stream LA-CIN01.001 does not meet the definition of reactivity as defined in 40 CFR 261.23 (Reference 15). Reactive chemicals (e.g., perchloric acid, sodium metal) are used or present in the facility and operations potentially contaminating this waste stream. However, D003 (reactivity) does not apply because the waste is stable and will not undergo violent chemical change without detonating. The waste will not react violently with water, form potentially explosive mixtures with water, or generate toxic gases, vapors, or fumes when mixed with water. The waste does not contain reactive cyanide or sulfide compounds. There is no indication that the waste contains explosive materials, and it is not capable of detonation or explosive reaction. The materials in the waste stream are therefore not reactive wastes (D003) (References, C121, C147, C201, C202, D071, and D083).

Controls have also been in place to ensure the exclusion of ignitable, corrosive, and reactive constituents. Section 5.4.3.4 provides a detailed list of TA-55 controls that apply to all waste streams. In addition, the absence of prohibited items is verified through RTR of each waste container (References D037, D041, D049, D083, P090, P096, P097, P102, and P165).

6.4.3.5 Polychlorinated Biphenyls (PCBs)

Based on documentation in procedures reviewed during the AK investigation and summarized in lists of inputs documented in the TA-55 process reports, no sources of PCBs are introduced into waste stream LA-CIN01.001. In the cement fixation operation (P/S Codes CF and HP), oils are sometimes added to drums of cemented waste. They are added to the 55-gallon drums of cement in small quantities (maximum of six liters). The oils are primarily vacuum pump oils, along with some oils used in heat-treating

(cooking or silicone oils) or in grinding. None of these oils are known to contain PCBs. All transformers known to contain PCBs have been tracked from initiation of recovery operations. When any transformer oil is drained, the oil is handled by a subcontractor who is wholly responsible for its disposal; this oil does not enter the LANL disposal operations. Therefore, this waste stream is not regulated as a TSCA waste under 40 CFR 761 (References 18, C096, C147, C201, D080, D083, P012, and P162).

6.4.3.6 Flammable Volatile Organic Compounds

The cement fixation process immobilizes aqueous and organic liquids with low plutonium concentrations, evaporator bottoms, and salts in cement. Based on review of AK relative to chemicals used or present in TA-55, trace quantities of Flammable Volatile Organic Compounds (FVOCs) may be present in the materials prior to processing and therefore an evaluation of potential FVOC concentrations was performed.

The cement fixation process primarily immobilizes the materials listed above; however, historically filtered solids and fines were also sometimes cemented, but this is no longer done. Reagents used during this operation include cement accelerator, gypsum cement, nitric acid (pH adjustment), organic liquid emulsifier, Portland cement, silicone defoamer, sodium citrate retarder, sodium hydroxide, and phthalate and phosphate buffer solutions for pH meter calibration. The waste materials were adjusted to a specific pH and stirred directly with gypsum or Portland cement into a one-gallon can inside the glovebox or 55-gallon drum attached to the glovebox. The cement fixation process is performed in a closed system, which prevents any introduction of extraneous material such as flammable compounds (References C171, C200, D008, D036, and D078).

The estimated waste weight percentages for inorganic waste materials (solidified inorganic and organic materials and one-gallon cans) and organic waste materials (rigid polyethylene liners) for this waste stream are 99.39 percent and 0.61 percent, respectively. In addition, the results of available headspace gas sampling and analysis of 50 drums in this waste stream indicated that FVOCs are not present in significant amounts. The total FVOCs measured for each of the drums is well below 500 ppm. Based on the final waste form and sample data, containers in waste stream LA-CIN01.001 are not expected to exceed a total FVOC concentration of greater than or equal to 500 ppm (References 8 and C184).

6.4.4 Prohibited Items

6.4.4.1 Compressed Gases, Liquids, Nonradionuclide Pyrophorics, Sealed Containers > Four Liters In Volume, >1 Percent Radionuclide Pyrophorics, and >200 mrem/hr Waste

Refer to Section 5.4.4.1 for a detailed evaluation of compressed gases, liquids, nonradionuclide pyrophorics, sealed containers greater than four liters in volume, >1 percent radionuclide pyrophorics, and >200 mrem/hr waste in TA-55 waste streams.

6.4.4.2 Remediation Of Prohibited Items

Prohibited items are known to be present. Procedures allowed containers greater than four liters, sealed with tape, to be used for waste packaging until WIPP certification procedures were implemented. In addition, the potential for prohibited quantities of liquid due to dewatering is anticipated. Lead shielding is used to increase handling safety, and thick shielding can obscure RTR observations (References C142, C143, D050, D083, and U005).

Prohibited items are detected by RTR and reported with the characterization results. Waste containers with prohibited items are segregated then dispositioned appropriately and/or repackaged, during which time liquids are absorbed, sealed containers greater than four liters are opened, and other items removed and segregated if necessary prior to certification and shipment. Some secondary waste generated during remediation and repackaging operations may be added to the waste containers, including but not limited to: absorbent (e.g., Waste Lock 770), alkaline batteries, Fantastik bottles used during decontamination, miscellaneous hand tools, paper/plastic tags and labels, plastic/metal wire ties, PPE, plastic sheeting used for contamination control, rags and wipes (Kimwipes), and original packaging material (e.g., plastic bags, plywood sheathing, rigid liner lids cut into pieces) (References C150, C177, D083, M316, P154, P158, and P203).

6.5 Waste Packaging

Waste packaging procedures for waste streams have been modified several times since the beginning of plutonium operations in PF-4 and containers in this waste stream include a variety of configurations with up to six layers of confinement. Historically cemented TRU waste could have been packaged in a vented 30-gallon drum. However, it is expected that cemented TRU waste from waste management operations would usually be packaged into a DOT 7A, Type A 55-gallon steel drum. Waste may be placed into plastic bags and mixed with cement (e.g., Portland cement) and water by hand-kneading. After cementation the bags were placed in cans and loaded into 55-gallon drums. Waste may be mixed with cement directly in cans and packaged into a 55-gallon drum with up to two plastic liner bags ranging from 5-mil to 12-mil. The typical arrangement of cans in the drum was five layers with each layer containing seven cans for a total of 35 cans. However, more or less cans could be present in a 55-gallon drum. The arrangement varied including placing inner cans with cement into larger cans and/or plastic bags. Cans with americium oxide were placed in the center of the drum. The inner cans were typically one-gallon in size; however, cans ranging in size from one quart to five gallon cans were used. The inner cans may include slip-top (also referred to as slip-fit) lids or tabbed pry-off lids with or without tape used to secure

the lid. The inner cans may or may not include shielding (e.g., lead liner). Waste may also be mixed with cement in a 90-mil/125-mil rigid polyethylene liner and packaged in a 55-gallon drum with up to two plastic liner bags. A cemented can of americium oxide could be included in the drum and it would be placed approximately midway down into the cement. However, personnel involved in the packaging of cemented waste believe this option was never used. When the drum was full the plastic liner bags were closed using the twist and tape method or the twist, tie, and tape method. The above packaging configurations typically, but not always, included 1/16-inch thick shielding (e.g., lead liner). The shielding (e.g., lead liner) consisted of two 1/16 inch thick discs, placed at the top and bottom of a 1/16-inch thick lead sheet fitted to the inside of the drum wall. If necessary, one or more 2-inch thick Styrofoam discs were placed on top of the outer plastic liner bag as bracing for the top circular lead disc (References C140, C226, C228, D041, D083, M252, P090, P152, P153, P179, P188, and U005).

Since 1995, several changes have been introduced to the packaging procedures. Liner bags could still be present, but they are typically closed by folding, not by taping. All waste packages (i.e., drums) are vented with approved filter vents prior to disposal (e.g., Nucfil-013). Since 1997, plastic bags with filters are typically used (References P091, P152, P153, P164, P166, P167, P168, P169, P178, and U005).

Beginning in 2006, several additional changes were introduced to the packaging procedures. The waste is still mixed with cement in a rigid polyethylene liner which is contained in a single plastic liner bag. A plastic bag skirt of the same material is attached to the rigid polyethylene liner on the inside of the drum-out bag for contamination control. The bag skirt is pushed down into the container once the mixing is complete to expose a clean drum-out bag. The drum-out bag is gathered into a tight bundle, sealed (e.g., with tape, plastic cable ties), and cut to remove the drum from the glovebox. Cemented waste is no longer packaged with a 1/16-inch thick shielding (e.g., lead liner) and Styrofoam discs. Remediated/repackaged waste may be packaged with or without a single plastic liner bag with one of the following drum configurations depending on the remediation facility: no liner, a fiberboard liner, a POC, or a 90-/125-mil rigid polyethylene liner without lid. Waste placed into a POC may be packaged into a single filtered plastic bag which may include a fiberboard liner/sleeve inside the plastic bag. POCs contain a pipe component in a 55-gallon drum that is lined with a punctured rigid liner with packing material between the pipe component and liner (References C164, P159, P171, P172, P175, and P195).

During waste management and drum storage activities following initial waste generation, 55-gallon drums have been overpacked larger drums (i.e., 85-gallon drums or larger) or SWBs to correct/address external contamination, FGE limits, and drum integrity problems such as pin hole corrosion, dents, etc. If drums are overpacked in an SWB (up to four 55-gallon), no closed liner bags are used in the SWB (References C138, D018, D024, D068, M222, P092, P098, P117, P158, P166, and P167).

RTR will confirm waste stream TRUCON code LA126/226. However, TRUCON code LA114/214 has been identified as suitable for individual containers in this waste stream. This TRUCON code may be assigned for the eventual certification and transportation of payload containers in this waste stream pending further evaluation by the Waste Certification Official of container-specific information. Vent dates for individual containers are provided in the AK Tracking Spreadsheet (References 9, 14, C002, C138, and M296).

7.0 REQUIRED WASTE STREAM INFORMATION: LA-MIN02-V.001

This section presents the mandatory waste stream AK required by the WIPP-WAP (Reference 1). Attachment 1 of CCP-TP-005 (Reference 8) provides a list of the TRU waste stream information required to be developed as part of the AK record.

7.1 Area and Building of Generation

All of the absorbed waste covered by this report originated from TA-55 R&D/fabrication and associated recovery, facility and equipment maintenance, D&D, waste repackaging, and below-grade retrieval operations described in Section 4.4. Container-specific records are reviewed for each container to verify the physical composition and origin of the waste stream inventory (References C154, C181, M222, and M242).

7.2 Waste Stream Volume and Period of Generation

Waste stream LA-MIN02-V.001 is mixed absorbed waste generated from 1980 to present. Table 14, LA-MIN02-V.001 Approximate Waste Stream Volume, summarizes the current volume of this waste stream. The future projection of additional generation of this waste stream is approximately 0.21 cubic meters per year. There is no projected end date for the termination of operations that generate this waste stream (References C152, C154, C181, C232, C235, D041, M222, and M242).

Table 14. LA-MIN02-V.001 Approximate Waste Stream Volume

Containers	Volume (cubic meters)
450 55-gallon drums (includes POCs)	94.5
4 85-gallon drums	1.28
1 SWB	1.88
455 Total	97.66

7.3 Waste Generating Activities

Absorbed waste is generated by or originated from materials used during TA-55 R&D/fabrication and associated recovery, facility and equipment maintenance, D&D, waste repackaging, and below-grade retrieval operations described in detail in Section 4.4 and includes (References D041 and D083):

- Preparing ultra-pure plutonium metals, alloys, and compounds
- Preparing (on a large scale) specific alloys, including casting and machining these materials into specific shapes

- Determining high-temperature thermodynamic properties of plutonium
- Reclaiming plutonium from scrap and residues produced by numerous feed sources
- Disassembling components for inspection and analysis
- Manufacturing of parts on a limited basis
- Processing mixtures of plutonium and uranium oxides for reactor fuels
- Pu-238 generator and heat source R&D, fabrication, testing, and recycling

7.4 Type of Wastes Generated

This section describes the process inputs, Waste Matrix Code assignment, WMPs, radionuclide contaminants, and RCRA hazardous waste determinations for waste stream LA-MIN02-V.001. The waste stream is characterized based on knowledge of the materials, knowledge of the operations generating the waste, and physical descriptions of the waste.

7.4.1 Material Input Related to Physical Form

Waste stream LA-MIN02-V.001 consists primarily of inorganic particulate waste generated in TA-55. The waste is largely comprised of TRU waste such as liquids and solids absorbed or mixed with absorbent (e.g., Ascarite II [sodium hydroxide coated silicate], diatomaceous earth [silica and quartz], kitty litter [clay], vermiculite [hydrated magnesium aluminum iron silicate], and/or zeolite [aluminosilicate mineral]). Examples of absorbed liquids include acids (e.g., hydrochloric acid, hydrofluoric acid, and nitric acid); carbon tetrachloride; ethylene glycol; kerosene; methanol; methylene chloride; silicone based liquids (e.g., silicone oil); tetrachloroethylene; tributyl phosphate; trichloroethylene; and various types of oils including hydraulic, vacuum pump, grinding, and lapping (mixture of mineral oil and lard). Solids mixed with absorbents are typically evaporator salts (i.e., nitrate salts). The waste is also expected to contain heavy metals such as cadmium, chromium, and lead. Liquids and solids not absorbed or mixed with absorbent are often cemented and disposed of separately in waste stream LA-CIN01.001. A small fraction of debris waste (less than 50 percent by volume) including plastic packaging, metal packaging, lead (e.g., shielding), PPE, and metal fines may also be present. Finally, some secondary waste generated during remediation/repackaging operations may be added to the waste containers, including but not limited to: absorbent (e.g., Waste Lock 770 [sodium polyacrylate]), alkaline batteries, Fantastik bottles used during decontamination, miscellaneous hand tools, paper/plastic tags and labels, plastic/metal wire ties, PPE, plastic sheeting used for contamination control, rags and wipes (Kimwipes), and original packaging material (e.g., metal, plastic bags, plywood sheathing, rigid liner lids cut into pieces)

(References C005, C035, C080, C094, C150, C177, C232, D007, D025, D032, D036, D041, D080, D083, M064, M142, M242, M286, and M316).

7.4.1.1 Waste Matrix Code

Based on the evaluation of the materials contained in this waste stream and LANL waste management practices, this waste stream is comprised of greater than 50 percent by volume of absorbed waste. Therefore, Waste Matrix Code S3110, Inorganic Particulate Waste, is assigned to waste stream LA-MIN02-V.001 (References 2, C154, D041, D083, M222, and M242).

7.4.1.2 Waste Material Parameters

The WMPs for waste stream LA-MIN02-V.001 were based on the descriptions of waste packaged into 339 containers. This waste stream is greater than 50 percent by volume of absorbed waste (References C154, C232, D041, D083, M222, and M242).

The WMPs for 49 containers were calculated assuming that approximately one gallon of absorbed waste was placed into either a 5-mil plastic bag or a one-gallon can, and subsequently placed in a bag-out bag prior to being placed in a drum. A conservative approach was taken with respect to the absorbed liquid. Unless specified otherwise, the liquid absorbed was assumed to be an organic matrix. Vermiculite, for example, is known to absorb approximately 250 percent of its weight in liquid; therefore, the vermiculite/organic matrix would be considered to be greater than 50 percent organic matrix. The WMPs for 290 containers were calculated assuming a 1 to 1.5 ratio of evaporator salts (i.e., nitrate salts) mixed with an inorganic absorbent material (e.g., zeolite, kitty litter). The average weights of absorbed waste, metal cans, and bag-out bags were used in the calculations. Average, minimum, and maximum WMP weight percentages were calculated using this data. These calculations conclude that the relative waste weight percentages for organic waste materials (primarily absorbed organic liquids and plastic bags) and inorganic waste materials (primarily absorbed inorganic solids and steel cans for waste stream LA-MIN02-V.001 are 15.13 percent and 84.87 percent, respectively. The results of the assessment are presented in Table 15, Waste Stream LA-MIN02-V.001 Waste Material Parameter Estimates.

The statistical analysis of the data is documented in a memorandum (included with Attachment 6) as required by CCP-TP-005 (Reference 8).

Table 15. Waste Stream LA-MIN02-V.001 Waste Material Parameter Estimates

Waste Material Parameter	Avg. Weight Percent	Weight Percent Range
Iron-based Metals/Alloys	4.65%	0.00% – 9.17%
Aluminum-based Metals/Alloys	0.00%	0.00% – 0.00%
Other Metals	0.00%	0.00% – 0.00%
Other Inorganic Materials	0.00%	0.00% – 0.00%
Cellulosics	0.00%	0.00% – 0.00%
Rubber	0.00%	0.00% – 0.00%
Plastics (waste materials)	4.57%	2.90% – 14.37%
Organic Matrix	10.56%	0.00% – 73.09%
Inorganic Matrix	80.22%	0.00% – 93.20%
Soils/Gravel	0.00%	0.00% – 0.00%
Total Organic Waste Avg.	**15.13%**	
Total Inorganic Waste Avg.	**84.87%**	

7.4.2 Radiological Characterization

7.4.2.1 Pu-238, Pu-239, Pu-240, Pu-241, and Pu-242

The primary plutonium material type inputs for the plutonium recovery process are listed in Section 5.4.2.2, Table 3. However, other MTs are occasionally introduced as feed material. The assignment of MTs is used to describe the isotopic composition of common blends of radioactive materials used within the DOE complex (References C186, C194, C209, C219, C222, D025, D073, D074, D076, D080, D083, M222, M283, M295, and M309).

Recovery operations are not expected to alter the plutonium isotopic ratios of the feed material. The material type used in the operation generating each waste item is documented on generator records; however, cross-contamination of equipment with different material types can lead to variable material types detected by radioassay (References D025, M222, and M242).

The primary MT that feeds into the Pu-238 operations described in this report is heat source grade plutonium (MT 83), and these operations are not expected to alter the plutonium isotopic ratios of the feed material. Section 5.4.2.2, Table 3, identifies the isotopic distribution of MT 83 based on 100 isotopic analyses which were decay corrected assuming the material was not chemically separated for 45 years (References C125, C186, C194, C209, C219, C222, D073, D074, D076, D080, D083, M283, M295, and M309).

7.4.2.2 U-233, U-234, U-235, and U-238

U-233 and U-238 are not normally components of the plutonium MTs handled at PF-4. U-235 is present from the decay of Pu-239 only at 0.1 percent by weight of the total plutonium content. However, all three isotopes have been introduced as special material. In addition, uranium-plutonium oxide mixtures have been processed to recover the plutonium. Significant quantities of U-234 will be present from the decay of Pu-238 in waste originating from heat source plutonium operations (References C222, D025, and D076).

In general, uranium and its isotopes are expected to be present only at trace levels, if at all, if the feed material did not purposely contain uranium. However, some reactor fuel development, uranium-plutonium separation, and pit disassembly operations have uranium material as the feed material. The primary uranium MT inputs are listed in Section 5.4.2.2, Table 4 (Reference D080).

U-234 content must be estimated since this isotope cannot be reliably measured using NDA techniques (Reference C001). The MT provides the basis for estimating an upper bound for U-234 based on the rate of decay of the precursor, Pu-238, and the assumption that there is no other source of uranium in the waste material. The content of U-234 in the Pu-239 MTs is calculated as the sum of the contributions expected from decay of Pu-238 and from uranium input to the operation, with the value of 0.014 conservatively used for the ratio of abundances of U-234 to U-235 in typical uranium MTs. The standard uranium MTs provide an estimate of the ratio of U-234 to U-235 where one of the MTs listed in Section 5.4.2.2, Table 4, is an indicated MT in the waste container (References D025 and D083).

7.4.2.3 Am-241

AK on the MT inputs provides the basis for estimating an upper bound for Am-241 content based on the rate of decay of the precursor, Pu-241. The purpose of such bounding calculations is to provide a basis for identifying significant enrichment or depletion of Am-241 based on radioassay results for individual waste containers. The calculations assume that (a) none of these isotopes were initially present in the material, (b) the oldest plutonium material in inventory dates back to January 1, 1960, and (c) the legacy waste was packaged on January 1, 1996, making it 36 years old at that time. In general, wastes from the plutonium recovery process are enriched with Am-241 because a primary intent of the recovery process is to reduce the americium content of the retained plutonium (References C222, D025, and D083).

No correlation is expected among the different radioelements, Pu, Np, U, Pa, or Am. The differences in valence states and chemical affinities among these elements are expected to result in substantial fractionation during several recovery operations, including ion exchange, solvent extraction, hydroxide precipitation, and dissolution (References D025 and D083).

7.4.2.4 Other Radionuclides Present Due to Decay

Other radionuclides will be present in most of the wastes from the decay of a plutonium isotopic precursor or as a contaminant in the feed material. Refer to Section 5.4.2.4 for a discussion of Np-237, Am-243, Pa-231, and Ac-227 decay products (References C067, C073, C208, C209, D025, D080, and D083).

7.4.2.5 Cs-137 and Sr-90

Cs-137

Cs-137 is a product of the spontaneous fission of Pu-238, Pu-239, and especially Pu-240. Cs-137 is also a trace contaminant in purified plutonium from the production reactors (References C067 and C073). In the latter case, the remaining cesium could be on the order of 0.5 ng/g plutonium. In the former instance the formation of Cs-137 due to spontaneous fission would lead to about 0.4 pg/g plutonium in plutonium that is 10 years old. Because Cs-137 due to spontaneous fission is about a factor of a thousand less than that due to residual contamination from the original separation on the production fuel, the latter is the dominant source of cesium in waste (References C208, C209, D025 and D083).

Sr-90

Based on interviews with an SME, no spent nuclear fuel or other material containing Sr-90 were introduced into the TRU waste streams (Reference C076). No references or procedures related to spent fuel processing were located in the AK investigation of records. No generator documents (i.e., WODF, DWLS, TWSR, and WPF) identified spent fuel or Sr-90 as inputs or as present in the waste. During review of WPFs and database records from the waste storage facility (TA-54), use of material containing Sr-90 was not identified (References C154 and C208). However, because of the requirement that an estimate of Sr-90 content be made, the following approach is taken. In plutonium production runs, Cs-137 and Sr-90 are produced at approximately the same level. These two nuclides have very similar half-lives (~ 30 y) and will therefore be present at roughly the same activity level prior to commencement of any processing operations. If it is assumed that strontium and cesium are not fractionated from one another during chemical processing, Cs-137 may be used as a marker for Sr-90 activity at a ratio of 1:1 (References D025 and D083).

7.4.2.6 Other Radionuclides Introduced as Feed Material

Refer to Section 5.4.2.6 and Table 5 for a discussion of secondary radionuclides that are also present in this waste stream due to operations involving feed materials other than plutonium. The list of radionuclides includes Ac-227, Am-241, Am-243, Ce-144, Cm-244, Np-237, Pa-231, Pu-238, Th-230, Th-232, U-233, U-235, and U-238 (References C067, C076, C108, D025, and D083).

7.4.2.7 Estimated Predominant Isotopes and 95 percent Total Activity

Radionuclide data established by the PF-4 waste generator on a container basis and container data from the Area G waste storage records were evaluated to determine the relative radionuclide weight and activity for waste stream LA-MIN02-V.001. This evaluation was performed using the data for the containers in this waste stream (if a container was repackaged, then the data from the parent container was used). From this evaluation, the two predominant isotopes for the waste stream are Pu-239 and U-238 while over 95 percent of the total activity is from Pu-239, Pu-240, and Pu-241. It should be noted that although U-238 is the most prevalent radionuclide by mass in the waste stream, U-238 was reported in only 12 containers. Table 16, Estimated Radionuclide Distribution in LA-MIN02-V.001, identifies the relative radionuclide weight and activity percent of expected radionuclides over the entire waste stream based on the container data evaluated. Radiological data was available for all of the waste in this waste stream. However, some of the containers list “zero” assay values. It is not known why the zero assay values are listed. This could indicate that assay was not performed on these containers although they were managed as TRU waste. It could also indicate low assay containers that did not contain activity levels above the lower limit of detection. Finally, it could indicate measured or estimated plutonium mass values below 0.5 grams. As illustrated in Table 16, the radionuclide weight percent of individual radionuclides varies on a container-by-container basis. Because of this variability in container loadings, some containers will not contain the waste stream predominant radionuclides but may contain other radionuclides expected in this waste stream (References C154, C181, C232, C235, D041, M242, and M307).

7.4.2.8 Use of Radionuclide Isotopic Ratios

For waste containers where direct measurement does not yield useable isotopic ratio information, AK may be used to supplement direct measurement data in accordance with the WIPP-WAC (Reference 3). The ratios that may be used are those identified in Section 5.4.2.2, Tables 3 and 4, in conjunction with the corresponding nuclear material type identified by the waste generator on a container basis. The specific use and confirmation of AK related to WIPP-certified assay measurements of containers in this waste stream is documented in the memorandum written in accordance with the requirements of CCP-TP-005 (Reference 8).

Table 16. Estimated Radionuclide Distribution in LA-MIN02-V.001

Radionuclide	Total Nuclide Weight%[1,5]	Total Nuclide Curie%[2,5]	Nuclide Wt% Range for Individual Containers[3,5]	Nuclide Ci% Range for Individual Containers[4,5]	Expected Present
WIPP Required Radionuclides					
Am-241	Trace	0.05%	0 - 7.64%	0 - 2.43%	Yes
Pu-238	0.01%	1.14%	0 - 83.75%	0 - 97.63%	Yes
Pu-239	**23.19%**	**17.32%**	0 - 95.29%	0 - 25.16%	Yes
Pu-240	1.63%	**4.45%**	0 - 16.49%	0 - 4.88%	Yes
Pu-242	0.04%	Trace	0 - 35.97%	0 - 0.17%	Yes
U-233[6]	Not Reported				
U-234	Trace	Trace	0 - Trace	0 - Trace	Yes
U-238	**74.80%**	Trace	0 - 99.32%	0 - Trace	Yes
Sr-90	Trace	Trace	0 - Trace	0 - Trace	Yes
Cs-137	Trace	Trace	0 - Trace	0 - Trace	Yes
Additional Radionuclides					
Np-237	Trace	Trace	0 - 1.45%	0 - Trace	Yes
Pu-241	0.06%	**77.04%**	0 - 1.18%	0 - 92.46%	Yes
Pu-244	Trace	Trace	0 - Trace	0 - Trace	Yes
U-235	0.26%	Trace	0 - 21.07%	0 - Trace	Yes
U-236	Trace	Trace	0 - Trace	0 - Trace	Yes

1. This listing indicates the total weight percent of each radionuclide over the entire waste stream.
2. This listing indicates the total activity (curie) percent of each radionuclide over the entire waste stream.
3. This listing is the weight percent range of each radionuclide on a container-by-container basis.
4. This listing is the curie percent range of each radionuclide on a container-by-container basis.
5. “Trace” indicates <0.01 weight or activity percent for that radionuclide.
6. Radionuclides not reported but suspected present from secondary radionuclides or decay.

7.4.3 Chemical Content Identification – Hazardous Constituents

Waste stream LA-MIN02-V.001 has historically been managed in accordance with the generator site requirements and in compliance with the requirements of the New Mexico Environmental Department. Based on historical waste management and LANL’s TRU Program (Reference LANL waste stream LA-MIN02-V), the containers in this waste stream were managed as hazardous and assigned the same EPA HWNs as the debris waste stream (except for HWN D028 discussed below) including arsenic (D004), (D004), barium (D005), cadmium (D006), chromium (D007), lead (D008), mercury (D009), selenium (D010), silver (D011), benzene (D018), carbon tetrachloride (D019), chlorobenzene (D021), chloroform (D022), 1,2-dichloroethane (D028), methyl ethyl ketone (D035), pyridine (D038), tetrachloroethylene (D039), trichloroethylene (D040), and F-listed solvents (F001, F002, F003, and F005). A review of available AK documentation has determined that this waste is hazardous for the above constituents, and with the exception of D028 and F003, the HWNs were retained. An evaluation was performed of existing TA-55 AK source documentation and no use of 1,2-dichloroethane (D028) was identified. This HWN is also not assigned to any other TA-55 waste streams. LANL waste stream LA-MIN02-V originally included containers from the CMR

Facility at TA-3 and HWN D028 is believed to be associated with this facility only. HWN F003 was not assigned because the waste stream does not exhibit the characteristic of ignitability. The following sections describe the characterization rationale for the assignment of EPA HWNs. Table 17, Waste Stream LA-MIN02-V.001 Hazardous Waste Characterization Summary, summarizes the EPA HWNs assigned to this waste stream. The HWN assignments have been applied on a waste stream basis; individual containers may not contain all of the hazardous material listed for the waste stream as a whole (Reference C121, C155, and D083).

Table 17. Waste Stream LA-MIN02-V.001 Hazardous Waste Characterization Summary

Waste Stream	EPA HWNs
LA-MIN02-V.001	F001, F002, F005, D004, D005, D006, D007, D008, D009, D010, D011, D018, D019, D021, D022, D035, D038, D039, and D040

Chemical constituents of inputs are compiled from chemical lists contained in procedures and from SME input. In this section, discussion of the chemical inputs is divided into the following categories (References C121, C155, and C197):

- Process feed materials
- Chemical Identification and Use

Section 5.4.3, Table 8, provides a summary of the special nuclear material feed materials processed by the operations described in this report.

7.4.3.1 Chemical Inputs

To assign EPA HWNs, the available AK documentation is reviewed to assess chemical usage in the TA-55 PF-4 operations contributing to waste stream LA-MIN02-V.001, and potentially hazardous materials that may have been introduced into the waste stream. In addition, MSDSs are obtained for the commercial products to determine the presence of potentially regulated compounds. As described in Section 5.4.3.1, Table 9, several of the HWNs are assigned due to lack of analytical evidence that these constituents have not exceeded the regulatory thresholds. The chemical inputs identified in Table 9 are used during TA-55 R&D/fabrication and associated recovery, facility and equipment maintenance, D&D, waste repackaging, and below-grade retrieval operations. This waste is largely comprised of liquids and solids generated or contaminated from these operations absorbed or mixed with absorbent. Therefore, these constituents have the potential to contaminate this waste stream.

7.4.3.2 F-, K-, P-, and U-Listed Constituents

Based on review of AK relative to chemicals used or present in the facility and operations potentially contaminating the absorbed waste, LA-MIN02-V.001 may contain or be mixed with F-listed hazardous wastes from non-specific sources listed in 40 CFR 261.31 (Reference 15). As shown in Section 5.4.3.1, Table 9, F001, F002, F003, and F005 listed solvents are utilized and potentially contaminate the waste. F003 constituents, including acetone, n-butyl alcohol, ethyl ether, methanol, and xylene, are listed solely because these solvents are ignitable in the liquid form. The waste stream does not exhibit the characteristic of ignitability and therefore F003 is not assigned. Waste stream LA-MIN02-V.001 is assigned F-listed EPA HWNs F001, F002, and F005 for potential 1,1,1-trichloroethane, benzene, carbon tetrachloride, chlorobenzene, Freon TF (1,1,2-trichloro, 1,2,2-trifluoroethane), methylene chloride, methyl ethyl ketone, pyridine, tetrachloroethylene, toluene, and trichloroethylene contamination (References C121, C155, and D083).

At one time, HWN P120 was applied to certain TRU drums generated in 1998 because of the temporary use of vanadium pentoxide for about six months in that year. Based upon investigation into the way the material was handled, this code is not assigned to this waste stream. A P120 assignment would be used only if waste resulted from spillage of this material or from disposal of un-reacted/unspent material. No un-reacted/unspent material was disposed of in TRU waste drums. In addition, no documented spill of this material occurred. If a spill had occurred, suitable records would exist (e.g., incident reports, waste profile forms). The absence of such documentation, coupled with information obtained through interviews of people who worked with the material, indicates that a P120 assignment is not necessary (References C061, C155, and D083).

Beryllium may be present in the waste stream, but does not meet the definition of a P015-listed waste. Available AK did not identify beryllium powder as a constituent of this waste stream. During processing within P/S Codes PU and PUB, beryllium from Pu-Be sources is dissolved with the plutonium in acid, and after dissolution, the beryllium is either precipitated or the contaminated solution is sent to the RLWTF at TA-50. The precipitate is not included in this waste stream. Beryllium from metal operations, in general, would be in the form of classified shapes and would therefore not be in this waste stream. In some cases, beryllium turnings are generated during machining operations. However, these turnings are not expected to be in this homogeneous waste stream. The beryllium contaminated waste from the material reclamation process was debris and would also not be in this waste stream. Individual containers in waste stream LA-MIN02-V.001 will contain less than one weight percent beryllium (References 14, C121, C122, C155, C156, and M283).

Hydrofluoric acid was used or present in the facility and operations potentially contaminating the absorbed waste; however, a U134 HWN assignment would only be applicable if the waste resulted from a spill or disposal of unused material. There is no documented spill of this material present. In addition, there is no record of unused hydrofluoric acid being disposed of in this waste stream (References C121, C155, D002, and D025).

Waste stream LA-MIN02-V.001 does not contain and is not mixed with a discarded commercial chemical product, an off-specification commercial chemical product, or a container residue or spill residue thereof. Constituents identified were further researched and a determination was made that waste does not meet the definition of a listed waste in 40 CFR 261.33 (Reference 15). The material in this waste stream is not hazardous from specific sources since it is not generated from any of the processes listed in 40 CFR 261.32 (Reference 15). Therefore, this waste stream is not a K-, P-, or U-listed waste stream (References C121 and C155).

7.4.3.3 Toxicity Characteristic Constituents

Based on review of AK relative to chemicals used or present in the facility and operations potentially contaminating the absorbed waste, LA-MIN02-V.001 may be contaminated with toxicity characteristic compounds as defined in 40 CFR 261.24 (Reference 15) as summarized in Section 5.4.3.1, Table 9. Where a constituent is identified and there is no quantitative data available to demonstrate that the concentration of a constituent is below regulatory threshold levels, the applicable EPA HWN is added to the waste stream. The AK also identified the potential presence of organic toxicity characteristic compounds that are assigned the more specific F-listed EPA HWNs. Although these organic characteristic compounds are covered by the assignment of the F-listed EPA HWNs, the toxicity characteristic EPA HWNs are also assigned to the waste stream for consistency with historical site waste coding. Waste stream LA-MIN02-V.001 is assigned the following HWNs: D004, D005, D006, D007, D008, D009, D010, D011, D018, D019, D021, D022, D035, D038, D039, and D040 (References C121, C155, and D083).

7.4.3.4 Ignitables, Corrosives, and Reactives

The homogeneous waste in waste stream LA-MIN02-V.001 does not meet the definition of ignitability as defined in 40 CFR 261.21 (Reference 15). Ignitable chemicals (e.g., acetone, hexane) are used or present in the facility and operations potentially contaminating this waste stream. However, D001 (ignitability) does not apply because: (a) the solid waste is not liquid, and verification that there are no prohibited liquids in the waste is performed prior to certification; (b) the solid waste does not spontaneously ignite at standard pressure and temperature through friction, absorption of moisture, or spontaneous chemical changes; (c) the solid waste is not an ignitable compressed gas; and (d) there are no oxidizers present that can stimulate combustion. Prior to 1992, some nitrate salts below the DL were not sent to cement fixation for immobilization but

were packaged as waste. LANL has determined that these salts do not meet the definition of a DOT oxidizer (i.e., they would not stimulate combustion). However, the salts are being remediated/repackaged in the WCRR Facility with an inert absorbent material (e.g., zeolite, kitty litter). The minimum inert absorbent material to nitrate salts mixture ratio is 1.5 to 1. LANL has determined that nitrate salts, when mixed with inert absorbent material, would further support the managing of the waste as non-ignitable. This determination is based on the results of oxidizing solids testing performed by the Energetic Materials Research and Testing Center. The materials in the waste stream are therefore not ignitable wastes (D001) (References C121, C155, C201, C203, C230, C231, D071, D083, D089, D090, D091, P096, P102, P187, and P198).

The homogeneous material in waste stream LA-MIN02-V.001 is not liquid and does not contain unreactive corrosive chemicals; therefore, it does not meet the definition of corrosivity as defined in 40 CFR 261.22 (Reference 15). Corrosive chemicals (e.g., hydrofluoric acid, nitric acid, potassium hydroxide, sodium hydroxide) are used or present in the facility and operations potentially contaminating this waste stream. However, D002 (corrosivity) does not apply because the solid waste is not a liquid, and verification that there are no prohibited liquids in the waste is performed prior to certification. The materials in the waste stream are therefore not corrosive wastes (D002) (References C121, C155, C194, D071, D083, P096, and P102).

The homogeneous waste in waste stream LA-MIN02-V.001 does not meet the definition of reactivity as defined in 40 CFR 261.23 (Reference 15). Reactive chemicals (e.g., perchloric acid, sodium metal) are used or present in the facility and operations potentially contaminating this waste stream. However, D003 (reactivity) does not apply because the waste is stable and will not undergo violent chemical change without detonating. The waste will not react violently with water, form potentially explosive mixtures with water, or generate toxic gases, vapors, or fumes when mixed with water. The waste does not contain reactive cyanide or sulfide compounds. There is no indication that the waste contains explosive materials, and it is not capable of detonation or explosive reaction. The materials in the waste stream are therefore not reactive wastes (D003) (References 15, C121, C155, C201, C202, D071, and D083).

Controls have also been in place to ensure the exclusion of ignitable, corrosive, and reactive constituents. Section 5.4.3.4 provides a detailed list of TA-55 controls that apply to all waste streams. In addition, the absence of prohibited items is verified through RTR of each waste container (References D037, D041, D049, D083, P090, P096, P097, P102, and P165).

7.4.3.5 Polychlorinated Biphenyls (PCBs)

Based on documentation in procedures reviewed during the AK investigation and summarized in lists of inputs documented in the TA-55 process reports, no sources of PCBs are introduced into waste stream LA-MIN02-V.001. In the cement fixation operation (P/S Codes CF and HP), oils are sometimes added to drums of cemented

waste. They are added to the 55-gallon drums of cement in small quantities (maximum of six liters). The oils are primarily vacuum pump oils, along with some oils used in heat-treating (cooking or silicone oils) or in grinding. None of these oils are known to contain PCBs. All transformers known to contain PCBs have been tracked from initiation of recovery operations. When any transformer oil is drained, the oil is handled by a subcontractor who is wholly responsible for its disposal; this oil does not enter the LANL disposal operations. Therefore, this waste stream is not regulated as a TSCA waste under 40 CFR 761 (References 18, C096, C155, C201, D080, D083, P012, and P162).

7.4.4 Prohibited Items

7.4.4.1 Compressed Gases, Liquids, Nonradionuclide Pyrophorics, Sealed Containers > Four Liters In Volume, >1 Percent Radionuclide Pyrophorics, and >200 mrem/hr Waste

Refer to Section 5.4.4.1 for a detailed evaluation of compressed gases, liquids, nonradionuclide pyrophorics, sealed containers greater than four liters in volume, >1 percent radionuclide pyrophorics, and >200 mrem/hr waste in TA-55 waste streams.

7.4.4.2 Remediation Of Prohibited Items

Prohibited items are not expected to be present. However, the presence of prohibited quantities of liquid due to dewatering or incomplete absorption is possible. Procedures also allowed containers greater than four liters, sealed with tape, to be used for waste packaging until WIPP certification procedures were implemented. Lead shielding was used to increase handling safety, and thick shielding can obscure RTR observations (References D025 and D083).

Prohibited items are detected by RTR and reported with the characterization results. Waste containers with prohibited items are segregated then dispositioned appropriately and/or repackaged, during which time sealed containers greater than four liters are opened, and other items removed and segregated if necessary prior to certification and shipment. Some secondary waste generated during remediation and repackaging operations may be added to the waste containers, including but not limited to: absorbent (e.g., Waste Lock 770), alkaline batteries, Fantastik bottles used during decontamination, miscellaneous hand tools, paper/plastic tags and labels, plastic/metal wire ties, PPE, plastic sheeting used for contamination control, rags and wipes (Kimwipes), and original packaging material (e.g., plastic bags, plywood sheathing, rigid liner lids cut into pieces) (References C150, C177, D083, M316, P154, P158, and P203).

7.5 Waste Packaging

Waste packaging procedures for waste streams have been modified several times since the beginning of plutonium operations in PF-4 and containers in this waste stream include a variety of configurations with up to four layers of confinement. Radioactively contaminated liquid wastes are examined to establish nuclear material content and are often treated or filtered prior to waste packaging. If the liquid is TRU and determined to be waste, it is immobilized with an absorbent (e.g., vermiculite). The minimum absorbent to liquid ratio is 3 to 1. After the liquid is absorbed, the waste is hand squeezed with a rubber glove. If any liquid is observed on the surface of the glove or the waste, more absorbent is added and the hand squeezing is repeated until the waste appears dry. Solids, typically evaporator salts (i.e., nitrate salts), are also mixed with absorbents (e.g., zeolite, kitty litter). The minimum absorbent to nitrate salts mixture ratio is 1.5 to 1. The absorbed waste is then typically placed into a plastic bag, an unsealed metal can, and/or a bottle and transferred directly into a bag-out bag (also called an inner bag) through an opening in the glovebox where the bag is attached, and the bag is then closed and detached from the glovebox. All bag closures are by the twist-and-tape method or the twist, tie, and tape method. Bagged out items are placed into a DOT 7A, Type A 55-gallon steel drum lined with either up to two 5-mil to 12-mil plastic liner bags closed with tape or one 90-mil/125-mil rigid polyethylene liner with lid (References D024, D025, D041, D083, M018, P090, P160, P161, P162, P163, P179, and P198).

Since 1995, several changes have been introduced to the packaging procedures. Up to two plastic liner bags could still be present, but they are typically closed by folding, not by taping. Waste can also be packaged in a rigid polyethylene drum liner contained in a bag-out bag which is then placed in a 55-gallon drum lined with a plastic liner bag. All waste packages (i.e., drums, SWBs) are vented with approved vents prior to disposal (e.g., Nucfil-013). Since 1997, plastic bags with filters are typically used. In addition, waste with a dose rate greater than 75 mrem/hr is placed in a lead or a tin alloy shielded container prior to packaging. Remediated/repackaged waste may be packaged with or without a single plastic liner bag with one of the following drum configurations depending on the remediation facility: no liner, a fiberboard liner, a POC, or a 90-/125-mil rigid polyethylene liner without lid. Waste placed into a POC may be packaged into a single filtered plastic bag which may include a fiberboard liner/sleeve inside the plastic bag. POCs contain a pipe component in a 55-gallon drum that is lined with a punctured rigid liner with packing material between the pipe component and liner (References C062, D025, D084, D085, P091, P159, P164, P166, P167, P168, P169, P175, P178, P195, and P198).

During waste management and drum storage activities following initial waste generation, 55-gallon drums have been overpacked into larger drums (i.e., 85-gallon drums or larger) or SWBs to correct/address external contamination, FGE limits, and drum integrity problems such as pin hole corrosion, dents, etc. If drums are overpacked in an SWB (up to four 55-gallon drums), no closed liner bags are used in the SWB (References C154, D018, D024, D068, M222, P092, P098, P117, P158, P166, and P167).

RTR will confirm waste stream TRUCON code LA112/212. However, TRUCON codes LA126/226, SQ112/212, SQ113/213, and SQ129/229 have been identified as suitable for individual containers in this waste stream. These TRUCON codes may be assigned for the eventual certification and transportation of payload containers in this waste stream pending further evaluation by the Waste Certification Official of container-specific information. Vent dates for individual containers are provided in the AK Tracking Spreadsheet (References 9, 14, C002, C154, D041, and M242).

8.0 REQUIRED WASTE STREAM INFORMATION: LA-MIN04-S.001

This section presents the mandatory waste stream AK required by the WIPP-WAP (Reference 1). Attachment 1 of CCP-TP-005 (Reference 8) provides a list of the TRU waste stream information required to be developed as part of the AK record.

8.1 Area and Building of Generation

All of the salt waste covered by this report originated from TA-55 R&D/fabrication and associated recovery, facility and equipment maintenance, D&D, waste repackaging, and below-grade retrieval operations described in Section 4.4. Container-specific records are reviewed for each container to verify the physical composition and origin of the waste stream inventory (References C172, C182, M222, and M279).

8.2 Waste Stream Volume and Period of Generation

Waste stream LA-MIN04-S.001 is salt waste generated from 1979 to present. Table 18, LA-MIN04-S.001 Approximate Waste Stream Volume, summarizes the current volume of this waste stream. The future projection of additional generation of this waste stream is approximately 22 cubic meters per year. There is no projected end date for the termination of operations that generate this waste stream (References C172, C174, C182, C236, D041, M222, and M279).

Table 18. LA-MIN04-S.001 Approximate Waste Stream Volume

Containers	Volume (cubic meters)
141 55-gallon drums (includes POCs)	29.61

8.3 Waste Generating Activities

Salt waste is generated during the purification of plutonium metal and scrap that is recovered or generated by recovery, during TA-55 R&D/fabrication and associated recovery, facility and equipment maintenance, D&D, waste repackaging, and below-grade retrieval operations described in detail in Section 4.4 and includes (References D041 and D083):

- Preparing ultra-pure plutonium metals, alloys, and compounds
- Preparing (on a large scale) specific alloys, including casting and machining these materials into specific shapes
- Determining high-temperature thermodynamic properties of plutonium

- Reclaiming plutonium from scrap and residues produced by numerous feed sources
- Disassembling components for inspection and analysis
- Manufacturing of parts on a limited basis
- Processing mixtures of plutonium and uranium oxides for reactor fuels
- Pu-238 generator and heat source R&D, fabrication, testing, and recycling

8.4 Type of Wastes Generated

This section describes the process inputs, Waste Matrix Code assignment, WMPs, radionuclide contaminants, and RCRA hazardous waste determinations for waste stream LA-MIN04-S.001. The waste stream is characterized based on knowledge of the materials, knowledge of the operations generating the waste, and physical descriptions of the waste.

8.4.1 Material Input Related to Physical Form

Waste stream LA-MIN04-S.001 consists primarily of inorganic homogeneous solid waste (salt waste) generated in TA-55. The waste is largely comprised of salts which are a byproduct from a variety of plutonium metal purification operations including electrorefining, molten salt extraction, salt stripping, fluoride reduction, and direct oxide reduction. Salts serve as a transportation vehicle for plutonium ions and provide a trap for impurities that are driven or extracted out during the purification process. Salt waste can include varying mixtures of calcium chloride, cesium chloride, lithium chloride, magnesium chloride, potassium chloride, sodium chloride, zinc chloride, residual entrained calcium and zinc metal, and various plutonium and americium compounds. The waste may also be contaminated with solvent metals and reagent materials such as barium, bismuth, cadmium, calcium carbonate, gallium, lead, molybdenum, niobium, tantalum, titanium, tungsten, vanadium, yttrium, and zirconium. Salts can be cemented and disposed of separately in waste stream LA-CIN01.001. A small fraction of debris waste (less than 50 percent by volume) including plastic packaging, metal packaging, PPE, and MgO crucible pieces may also be present. Finally, some secondary waste generated during remediation/repackaging operations may be added to the waste containers, including but not limited to: absorbent (e.g., Waste Lock 770 [sodium polyacrylate]), alkaline batteries, Fantastik bottles used during decontamination, miscellaneous hand tools, paper/plastic tags and labels, plastic/metal wire ties, PPE, plastic sheeting used for contamination control, rags and wipes (Kimwipes), and original packaging material (e.g., metal, plastic bags, plywood sheathing, rigid liner lids cut into pieces) (References C150, C177, D011, D025, D028, D032, D055, D078, D080, D083, M028, M029, M130, M316, and P157).

8.4.1.1 Waste Matrix Code

Based on the evaluation of the materials contained in this waste stream and LANL waste management practices, this waste stream is comprised of greater than 50 percent by volume of salt waste. Therefore, Waste Matrix Code S3140, Salt Waste, is assigned to waste stream LA-MIN04-S.001 (References 2, C172, D041, D083, M222, and M279).

8.4.1.2 Waste Material Parameters

To estimate the WMPs for waste stream LA-MIN04-S.001, batch data reports (BDRs) were obtained from the CCP at LANL. This waste stream is greater than 50 percent by volume material that meets the criteria for salt waste (References C172 and M279).

The WMPs for waste stream LA-MIN04-S.001 were estimated by reviewing the RTR data documented in the BDRs for 35 containers packaged from February 1985 to May 2008. The RTR data provides a weight for packaged waste materials, which were categorized into one or more of the following WMPs: iron based metals/alloys, other metals/alloys, other inorganic materials (which were included under inorganic matrix), plastics, and inorganic matrix. Average, minimum, and maximum WMP weight percentages were calculated using this data. These calculations conclude that the relative waste weight percentages for organic waste materials (plastic debris) and inorganic waste materials (primarily salt and metal debris) for waste stream LA-MIN04-S.001 are 11.0 percent and 89.0 percent, respectively. The results of the assessment are presented in Table 19, Waste Stream LA-MIN04-S.001 Waste Material Parameter Estimates.

The statistical analysis of the data is documented in a memorandum (included with Attachment 6) as required by CCP-TP-005 (Reference 8).

Table 19. Waste Stream LA-MIN04-S.001 Waste Material Parameter Estimates

Waste Material Parameter	Avg. Weight Percent	Weight Percent Range
Iron-based Metals/Alloys	21.0%	0.0 – 58.3%
Aluminum-based Metals/Alloys	0.0%	0.0 – 0.0%
Other Metals	1.3%	0.0 – 3.2%
Other Inorganic Materials	0.0%	0.0 – 0.0%
Cellulosics	0.0%	0.0 – 0.0%
Rubber	0.0%	0.0 – 0.0%
Plastic (waste materials)	11.0%	0.6 – 55.6%
Organic Matrix	0.0%	0.0 – 0.0%
Inorganic Matrix	66.7%	0.0 – 96.2%
Soils/Gravel	0.0%	0.0 – 0.0%
Total Organic Waste Avg.	**11.0%**	
Total Inorganic Waste Avg.	**89.0%**	

8.4.2 Radiological Characterization

8.4.2.1 Pu-238, Pu-239, Pu-240, Pu-241, and Pu-242

The primary plutonium material type inputs for the plutonium recovery process are listed in Section 5.4.2.2, Table 3. However, other MTs are occasionally introduced as feed material. The assignment of MTs is used to describe the isotopic composition of common blends of radioactive materials used within the DOE complex (References C186, C194, C209, C219, C222, D025, D073, D074, D076, D080, D083, M222, M283, M295, and M309).

Recovery operations are not expected to alter the plutonium isotopic ratios of the feed material. The material type used in the operation generating each waste item is documented on generator records; however, cross-contamination of equipment with different material types can lead to variable material types detected by radioassay (References D025, M222, and M279).

The primary MT that feeds into the Pu-238 operations described in this report is heat source grade plutonium (MT 83), and these operations are not expected to alter the plutonium isotopic ratios of the feed material. Section 5.4.2.2, Table 3, identifies the isotopic distribution of MT 83 based on 100 isotopic analyses and were decay corrected assuming the material was not chemically separated for 45 years (References C125, C186, C194, C209, C219, C222, D073, D074, D076, D080, D083, M283, M295, and M309).

8.4.2.2 U-233, U-234, U-235, and U-238

U-233 and U-238 are not normally components of the plutonium MTs handled at PF-4. U-235 is present from the decay of Pu-239 only at 0.1 percent by weight of the total plutonium content. However, all three isotopes have been introduced as special material. In addition, uranium-plutonium oxide mixtures have been processed to recover the plutonium. Significant quantities of U-234 will be present from the decay of Pu-238 in waste originating from heat source plutonium operations (References C222, D025, and D076).

In general, uranium and its isotopes are expected to be present only at trace levels, if at all, if the feed material did not purposely contain uranium. However, some reactor fuel development, uranium-plutonium separation, and pit disassembly operations have uranium material as the feed material. The primary uranium MT inputs are listed in Section 5.4.2.2, Table 4 (Reference D080).

U-234 content must be estimated since this isotope cannot be reliably measured using NDA techniques (Reference C001). The MT provides the basis for estimating an upper bound for U-234 based on the rate of decay of the precursor, Pu-238, and the assumption that there is no other source of uranium in the waste material. The content of U-234 in the Pu-239 MTs is calculated as the sum of the contributions expected from decay of Pu-238 and from uranium input to the operation, with the value of 0.014 conservatively used for the ratio of abundances of U-234 to U-235 in typical uranium MTs. The standard uranium MTs provide an estimate of the ratio of U-234 to U-235 where one of the MTs listed in Section 5.4.2.2, Table 4, is an indicated MT in the waste container (References D025 and D083).

8.4.2.3 Am-241

AK on the MT inputs provides the basis for estimating an upper bound for Am-241 content based on the rate of decay of the precursor, Pu-241. The purpose of such bounding calculations is to provide a basis for identifying significant enrichment or depletion of Am-241 based on radioassay results for individual waste containers. The calculations assume that (a) none of these isotopes were initially present in the material, (b) the oldest plutonium material in inventory dates back to January 1, 1960, and (c) the legacy waste was packaged on January 1, 1996, making it 36 years old at that time. In general, wastes from the plutonium recovery process are enriched with Am-241, because a primary intent of the recovery process is to reduce the americium content of the retained plutonium (References C222, D025, and D083).

No correlation is expected among the different radioelements, Pu, Np, U, Pa, or Am. The differences in valence states and chemical affinities among these elements are expected to result in substantial fractionation during several recovery operations, including ion exchange, solvent extraction, hydroxide precipitation, and dissolution (References D025 and D083).

8.4.2.4 Other Radionuclides Present Due to Decay

Other radionuclides will be present in most of the wastes from the decay of a plutonium isotopic precursor or as a contaminant in the feed material. Refer to Section 5.4.2.4 for a discussion of Np-237, Am-243, Pa-231, and Ac-227 decay products (References C067, C073, C208, C209, D025, D080, and D083).

8.4.2.5 Cs-137 and Sr-90

Cs-137

Cs-137 is a product of the spontaneous fission of Pu-238, Pu-239, and especially Pu-240. Cs-137 is also a trace contaminant in purified plutonium from the production reactors (References C067 and C073). In the latter case, the remaining cesium could be on the order of 0.5 ng/g plutonium. In the former instance the formation of Cs-137 due to spontaneous fission would lead to about 0.4 pg/g plutonium in plutonium that is 10 years old. Because Cs-137 due to spontaneous fission is about a factor of a thousand less than that due to residual contamination from the original separation on the production fuel, the latter is the dominant source of cesium in waste (References C208, C209, D025, and D083).

Sr-90

Based on interviews with an SME, no spent nuclear fuel or other material containing Sr-90 were introduced into the TRU waste streams (Reference C076). No references or procedures related to spent fuel processing were located in the AK investigation of records. No generator documents (i.e., WODF, DWLS, TWSR, and WPF) identified spent fuel or Sr-90 as inputs or as present in the waste. During review of WPFs and database records from the waste storage facility (TA-54), use of material containing Sr-90 was not identified (References C172 and C208). However, because of the requirement that an estimate of Sr-90 content be made, the following approach is taken. In plutonium production runs, Cs-137 and Sr-90 are produced at approximately the same level. These two nuclides have very similar half-lives (~ 30 y) and will therefore be present at roughly the same activity level prior to commencement of any processing operations. If it is assumed that strontium and cesium are not fractionated from one another during chemical processing, Cs-137 may be used as a marker for Sr-90 activity at a ratio of 1:1 (References D025 and D083).

8.4.2.6 Other Radionuclides Introduced as Feed Material

Refer to Section 5.4.2.6 and Table 5 for a discussion of secondary radionuclides that are also present in this waste stream due to operations involving feed materials other than plutonium. The list of radionuclides includes Ac-227, Am-241, Am-243, Ce-144, Cm-244, Np-237, Pa-231, Pu-238, Th-230, Th-232, U-233, U-235, and U-238 (References C067, C076, C108, D025, and D083).

8.4.2.7 Estimated Predominant Isotopes and 95 percent Total Activity

Radionuclide data established by the PF-4 waste generator on a container basis and container data from the Area G waste storage records were evaluated to determine the relative radionuclide weight and activity for waste stream LA-MIN04-S.001. From this evaluation, the two predominant isotopes for the waste stream are Pu-239 and U-238, while over 95 percent of the total activity in the waste stream is from Pu-239, Pu-240, and Pu-241. It should be noted that although U-238 is the second most predominant isotope by mass in the waste stream, it was only reported in a small percentage of containers. The predominant isotopes for most containers in this waste stream are Pu-239 and Pu-240. Table 20, Estimated Radionuclide Distribution in LA-MIN04-S.001, identifies the relative radionuclide weight and activity percent of expected radionuclides over the entire waste stream based on the container data evaluated. As illustrated in Table 20, the radionuclide weight percent of individual radionuclides varies on a container-by-container basis. Because of this variability in container loadings, some containers will not contain the waste stream predominant radionuclides but may contain other radionuclides expected in this waste stream (References C172, C182, C224, C232, C236, D041, M279, M307, and M317).

8.4.2.8 Use of Radionuclide Isotopic Ratios

For waste containers where direct measurement does not yield useable isotopic ratio information, AK may be used to supplement direct measurement data in accordance with the WIPP-WAC (Reference 3). The ratios that may be used are those identified in Section 5.4.2.2, Tables 3 and 4, in conjunction with the corresponding nuclear material type identified by the waste generator on a container basis. The specific use and confirmation of AK related to WIPP-certified assay measurements of containers in this waste stream is documented in the memorandum written in accordance with the requirements of CCP-TP-005 (Reference 8).

Table 20. Estimated Radionuclide Distribution in LA-MIN04-S.001

Radionuclide	Total Nuclide Wt%[1]	Total Nuclide Ci%[2,5]	Nuclide Wt% Range for Individual Containers[3,5]	Nuclide Ci% Range for Individual Containers[4,5]	Expected Present
WIPP Required Radionuclides					
Am-241	0.14%	1.81%	0.00% - 15.50%	0.00% - 69.26%	Yes
Pu-238	0.01%	0.95%	0.00% - 0.68%	0.00% - 7.05%	Yes
Pu-239	**72.55%**	**16.94%**	0.00% - 96.71%	0.00% - 40.51%	Yes
Pu-240	4.98**%**	**4.25%**	0.00% - 16.19%	0.00% - 4.88%	Yes
Pu-242	0.72%	0.01%	0.00% - 92.16%	0.00% - 0.21%	Yes
U-233[6]	Not Reported				Yes
U-234	Trace	Trace	0.00% - Trace	0.00% - Trace	Yes
U-238	**21.34%**	Trace	0.00% - 95.95%	0.00% - Trace	Yes
Sr-90	Trace	Trace	0.00% - Trace	0.00% - Trace	Yes
Cs-137	Trace	Trace	0.00% - Trace	0.00% - Trace	Yes
Additional Radionuclides					
Np-237	Trace	Trace	0.00% - Trace	0.00% - Trace	Yes
Pu-241	0.24%	**76.04%**	0.08% - 1.58%	43.11% - 93.06%	Yes
Pu-244	Trace	Trace	0.00% - 0.02%	0.00% - Trace	Yes
U-235	0.05%	Trace	0.00% - 0.24%	0.00% - Trace	Yes

1. This listing indicates the total weight percent of each radionuclide over the entire waste stream.
2. This listing indicates the total activity (curie) percent of each radionuclide over the entire waste stream.
3. This listing is the weight percent range of each radionuclide on a container-by-container basis.
4. This listing is the curie percent range of each radionuclide on a container-by-container basis.
5. "Trace" indicates <0.01 weight or activity percent for that radionuclide.
6. Radionuclides not reported but suspected present from secondary radionuclides or decay.

8.4.3 Chemical Content Identification – Hazardous Constituents

Waste stream LA-MIN04-S.001 historically been managed in accordance with the generator site requirements and in compliance with the requirements of the New Mexico Environmental Department. Based on historical waste management and LANL's TRU Program (Reference LANL waste stream LA-MIN04-S), the containers in this waste stream were managed as hazardous and assigned the same EPA HWNs as the debris waste stream including arsenic (D004), barium (D005), cadmium (D006), chromium (D007), lead (D008), mercury (D009), selenium (D010), silver (D011), benzene (D018), carbon tetrachloride (D019), chlorobenzene (D021), chloroform (D022), methyl ethyl ketone (D035), pyridine (D038), tetrachloroethylene (D039), trichloroethylene (D040), and F-listed solvents (F001, F002, F003, and F005). A review of available AK documentation has determined that this waste is hazardous for the above constituents, and with the exception of F003, the HWNs were retained. HWN F003 was not assigned because the waste stream does not exhibit the characteristic of ignitability. The following sections describe the characterization rationale for the assignment of EPA HWNs. Table 21, Waste Stream LA-MIN04-S.001 Hazardous Waste Characterization Summary, summarizes the EPA HWNs assigned to this waste stream. The HWN

assignments have been applied on a waste stream basis; individual containers may not contain all of the hazardous material listed for the waste stream as a whole (References C121, C173, and D083).

Table 21. Waste Stream LA-MIN04-S.001 Hazardous Waste Characterization Summary

Waste Stream	EPA HWNs
LA-MIN04-S.001	F001, F002, F005, D004, D005, D006, D007, D008, D009, D010, D011, D018, D019, D021, D022, D035, D038, D039, and D040

Chemical constituents of inputs are compiled from chemical lists contained in procedures and from SME input. In this section, discussion of the chemical inputs is divided into the following categories (References C121, C173, and C197):

- Process Feed Materials
- Chemical Identification and Use

Section 5.4.3, Table 8, provides a summary of the special nuclear material feed materials processed by the operations described in this report.

8.4.3.1 Chemical Inputs

To assign EPA HWNs, the available AK documentation is reviewed to assess chemical usage in the TA-55 PF-4 operations contributing to waste stream LA-MIN04-S.001, and potentially hazardous materials that may have been introduced into the waste stream. In addition, MSDSs are obtained for the commercial products to determine the presence of potentially regulated compounds. As described in Section 5.4.3.1, Table 9, several of the HWNs are assigned due to lack of analytical evidence that these constituents have not exceeded the regulatory thresholds. The chemical inputs identified in Table 9 are used during TA-55 R&D/fabrication and associated recovery, facility and equipment maintenance, D&D, waste repackaging, and below-grade retrieval operations. This waste is largely comprised of salt waste from plutonium metal purification operations that received plutonium metal and scrap that is recovered or generated by these various operations. Therefore, these constituents have the potential to contaminate this waste stream.

8.4.3.2 F-, K-, P-, and U-Listed Constituents

Based on review of AK relative to chemicals used or present in the facility and operations potentially contaminating the salt waste, LA-MIN04-S.001 may contain or be mixed with F-listed hazardous wastes from non-specific sources listed in 40 CFR 261.31 (Reference 15). As shown in Section 5.4.3.1, Table 9, F001, F002, F003, and F005 listed solvents are utilized and potentially contaminate the waste. F003

constituents, including acetone, n-butyl alcohol, ethyl ether, methanol, and xylene, are listed solely because these solvents are ignitable in the liquid form. The waste stream does not exhibit the characteristic of ignitability and therefore F003 is not assigned. Waste stream LA-MIN04-S.001 is assigned F-listed EPA HWNs F001, F002, and F005 for potential 1,1,1-trichloroethane, benzene, carbon tetrachloride, chlorobenzene, Freon TF (1,1,2-trichloro, 1,2,2-trifluoroethane), methylene chloride, methyl ethyl ketone, pyridine, tetrachloroethylene, toluene, and trichloroethylene contamination (References C121, C173, and D083).

At one time, HWN P120 was applied to certain TRU drums generated in 1998 because of the temporary use of vanadium pentoxide for about six months in that year. Based upon investigation into the way the material was handled, this code is not assigned to this waste stream. A P120 assignment would be used only if waste resulted from spillage of this material or from disposal of un-reacted/unspent material. No un-reacted/unspent material was disposed of in TRU waste drums. In addition, no documented spill of this material occurred. If a spill had occurred, suitable records would exist (e.g., incident reports, waste profile forms). The absence of such documentation, coupled with information obtained through interviews of people who worked with the material, indicates that a P120 assignment is not necessary (References C061, C173, and D083).

Beryllium may be present in the waste stream, but does not meet the definition of a P015-listed waste. Available AK did not identify the use of beryllium powder. During processing within P/S Codes PU and PUB, beryllium from Pu-Be sources is dissolved with the plutonium in acid, and after precipitation, the beryllium is either precipitated or remained in solution that is sent to the RLWTF at TA-50, and the precipitate is not included in this waste stream. Beryllium from metal operations, in general, is in the form of classified shapes and is therefore not in this waste stream. In some cases, beryllium turnings are generated during machining operations. However, these turnings are not expected to be in this homogeneous waste stream. Individual containers in waste stream LA-MIN04-S.001 will contain less than one weight percent beryllium (References 14, C121, C122, C173, and M283).

Waste stream LA-MIN04-S.001 does not contain and is not mixed with a discarded commercial chemical product, an off-specification commercial chemical product, or a container residue or spill residue thereof. Constituents identified were further researched and a determination was made that waste does not meet the definition of a listed waste in 40 CFR 261.33 (Reference 15). The material in this waste stream is not hazardous from specific sources since it is not generated from any of the processes listed in 40 CFR 261.32 (Reference 15). Therefore, this waste stream is not a K-, P-, or U-listed waste stream (References C121 and C173).

Hydrofluoric acid was used or present in the facility and operations potentially contaminating the salt waste; however, a U134 HWN assignment would only be applicable if the waste resulted from a spill or disposal of unused material. There is no

documented spill of this material present. In addition, there is no record of unused hydrofluoric acid being disposed of in this waste stream (References C121, C155, D002, and D025).

8.4.3.3 Toxicity Characteristic Constituents

Based on review of AK relative to chemicals used or present in the facility and operations potentially contaminating the salt waste, LA-MIN04-S.001 may be contaminated with toxicity characteristic compounds as defined in 40 CFR 261.24 (Reference 15) as summarized in Section 5.4.3.1, Table 9. Where a constituent is identified and there is no quantitative data available to demonstrate that the concentration of a constituent is below regulatory threshold levels, the applicable EPA HWN is added to the waste stream. The AK also identified the potential presence of organic toxicity characteristic compounds that are assigned the more specific F-listed EPA HWNs. Although these organic characteristic compounds are covered by the assignment of the F-listed EPA HWNs, the toxicity characteristic EPA HWNs are also assigned to the waste stream for consistency with historical site waste coding. Waste stream LA-MIN04-S.001 is assigned the following HWNs: D004, D005, D006, D007, D008, D009, D010, D011, D018, D019, D021, D022, D035, D038, D039, and D040 (References C121, C173, and D083).

8.4.3.4 Ignitables, Corrosives, and Reactives

The homogeneous material in waste stream LA-MIN04-S.001 does not meet the definition of ignitability as defined in 40 CFR 261.21 (Reference 15). Ignitable chemicals (e.g., acetone, hexane) are used or present in the facility and operations potentially contaminating this waste stream. However, D001 (ignitability) does not apply because: (a) the solid waste is not liquid, and verification that there are no prohibited liquids in the waste is performed prior to certification; (b) the solid waste does not spontaneously ignite at standard pressure and temperature through friction, absorption of moisture, or spontaneous chemical changes; (c) the solid waste is not an ignitable compressed gas; and (d) there are no oxidizers present except as trace contaminants. Nitrate salts are solidified/stabilized in cement or absorbent and are not included in this waste stream. The materials in the waste stream are therefore not ignitable wastes (D001) (References C121, C173, C201, C202, C203, D071, D083, P096, P102, and P187).

The homogeneous material in waste stream LA-MIN04-S.001 is not liquid and does not contain unreactive corrosive chemicals; therefore, it does not meet the definition of corrosivity as defined in 40 CFR 261.22 (Reference 15). Corrosive chemicals (e.g., hydrofluoric acid, nitric acid, potassium hydroxide, sodium hydroxide) are used or present in the facility and operations potentially contaminating this waste stream. However, D002 (corrosivity) does not apply because the solid waste is not a liquid, and verification that there are no prohibited liquids in the waste is performed prior to

certification. The materials in the waste stream are therefore not corrosive wastes (D002) (References C121, C173, C194, D071, D083, P091, P096, and P102).
The homogeneous material in waste stream LA-MIN04-S.001 does not meet the definition of reactivity as defined in 40 CFR 261.23 (Reference 15). Reactive chemicals (e.g., perchloric acid, sodium metal) are used or present in the facility and operations potentially contaminating this waste stream. However, D003 (reactivity) does not apply because the waste is stable and will not undergo violent chemical change without detonating. The waste will not react violently with water, form potentially explosive mixtures with water, or generate toxic gases, vapors, or fumes when mixed with water. The waste does not contain reactive cyanide or sulfide compounds. There is no indication that the waste contains explosive materials, and it is not capable of detonation or explosive reaction. The materials in the waste stream are therefore not reactive wastes (D003) (References 15, C121, C173, C201, D071, and D083).

Controls have also been in place to ensure the exclusion of ignitable, corrosive, and reactive constituents. Section 5.4.3.4 provides a detailed list of TA-55 controls that apply to all waste streams. In addition, the absence of prohibited items is verified through RTR of each waste container (References D037, D041, D049, D083, P090, P096, P097, P102, and P165).

8.4.3.5 Polychlorinated Biphenyls (PCBs)

Based on documentation in procedures reviewed during the AK investigation and summarized in lists of inputs documented in the TA-55 process reports, no sources of PCBs are introduced into waste stream LA-MIN04-S.001. All transformers known to contain PCBs have been tracked from initiation of recovery operations. When any transformer oil is drained, the oil is handled by a subcontractor who is wholly responsible for its disposal; this oil does not enter the LANL disposal operations. Suspect PCB fluorescent light ballasts occasionally found in heterogeneous debris would not be present in this waste stream. PCB containing waste is identified during characterization activities and those containers are managed in accordance with the CCP waste certification program (i.e., removed from this waste stream). Therefore, this waste stream is not regulated as a TSCA waste under 40 CFR 761 (References 18, C096, C173, C201, D080, D083, P012, and P162).

8.4.4 Prohibited Items

8.4.4.1 Compressed Gases, Liquids, Nonradionuclide Pyrophorics, Sealed Containers Greater Than Four Liters In Volume, >1 Percent Radionuclide Pyrophorics, and >200 mrem/hr Waste

Refer to Section 5.4.4.1 for a detailed evaluation of compressed gases, liquids, nonradionuclide pyrophorics, sealed containers greater than four liters in volume, >1 percent radionuclide pyrophorics, and >200 mrem/hr waste in TA-55 waste streams.

8.4.4.2 Remediation of Prohibited Items

Prohibited items are not expected to be present. However, procedures allowed containers greater than four liters, sealed with tape, to be used for waste packaging until WIPP certification procedures were implemented. Lead shielding is used to increase handling safety, and thick shielding can obscure RTR observations (References D025 and D083).

Prohibited items are detected by RTR and reported with the characterization results. Waste containers with prohibited items are segregated then dispositioned appropriately and/or repackaged, during which time sealed containers greater than four liters are opened, and other items removed and segregated if necessary prior to certification and shipment. Some secondary waste generated during remediation and repackaging operations may be added to the waste containers, including but not limited to: absorbent (e.g., Waste Lock 770), alkaline batteries, Fantastik bottles used during decontamination, miscellaneous hand tools, paper/plastic tags and labels, plastic/metal wire ties, PPE, plastic sheeting used for contamination control, rags and wipes (Kimwipes), and original packaging material (e.g., plastic bags, plywood sheathing, rigid liner lids cut into pieces) (References C150, C177, D083, M316, P154, P158, and P203).

8.5 Waste Packaging

Waste packaging procedures for waste streams have been modified several times since the beginning of plutonium operations in PF-4 and containers in this waste stream include a variety of configurations with up to four layers of confinement. Typically, salts are generated after multiple plutonium purification runs involving the heating and cooling of various salt and metal mixtures. Once the salt and metal mixtures are separated, the salts are placed into a tin or stainless-steel can/dressing jar and transferred directly into a bag-out bag (also called an inner bag) through an opening in the glovebox where the bag is attached. The bag is then closed and detached from the glovebox. Waste may also be packaged in either an unsealed metal can within a single filtered plastic bag or directly into one filtered plastic bag. All bag closures are by the twist-and-tape method or the twist, tie, and tape method. Bagged out items are placed into a 55-gallon DOT 7A, Type A 55-gallon steel drum lined with either two 5-mil or greater plastic liner bags closed with tape, or one 90-mil/125-mil rigid polyethylene liner with lid. In addition, salt waste may be packaged into a POC. In this configuration the salt waste is placed directly into a metal can and then placed into a pipe component. The metal can may also be bagged out and/or placed into a secondary can. Waste placed into a POC may also be packaged into a single filtered plastic bag which may include a fiberboard liner/sleeve inside the plastic bag. Once the material is placed into the pipe component, the lid with filter is bolted on. The pipe component is contained in a standard 55-gallon steel drum that is lined with a punctured rigid liner with packaging material between the pipe component and liner (References D024, D025, D041, D083, D084, P090, P157, P159, P160, P161, P162, P163, P175, P177, P179, and P188).

Since 1995, several changes have been introduced to the packaging procedures. Up to two plastic liner bags could still be present, but they are typically closed by folding, not by taping. Waste can also be packaged in a rigid polyethylene drum liner contained in a bag-out bag which is then placed in a 55-gallon drum lined with a 5-mil plastic liner bag. All waste packages (i.e., drums) are vented with approved filter vents prior to disposal (e.g., Nucfil-013). Since 1997, plastic bags with filters are typically used. In addition, waste with a dose rate greater than 75 mrem/hr is placed in a lead or a tin alloy shielded container prior to packaging. Remediated/repackaged waste may be packaged with or without a single plastic liner bag with one of the following drum configurations depending on the remediation facility: no liner, a fiberboard liner, a POC, or a 90-/125-mil rigid polyethylene liner without lid (References C062, D025, D084, D085, P091, P159, P164, P166, P167, P168, P169, P175, P178, and P195).

During waste management and drum storage activities following initial waste generation, 55-gallon drums may be overpacked into larger drums (i.e., 85-gallon drums or larger) or SWBs to correct/address external contamination, FGE limits, and drum integrity problems such as pin hole corrosion, dents, etc. If drums are overpacked in an SWB (up to four 55-gallon drums), no closed liner bags are used in the SWB (References D018, D024, D041, D068, M222, M279, P092, P098, P117, P158, P166, and P167).

RTR will confirm waste stream TRUCON code LA124/224. Vent dates for individual containers are provided in the AK Tracking Spreadsheet (References 9, 14, C002, D041, and M279).

9.0 CONTAINER-SPECIFIC INFORMATION

Several data sources were reviewed relating container-specific information about the radiological, physical, and chemical characterization of containers in these waste streams including archived and active site database information and generator records. The list of containers included in these waste streams is provided in the current AK Tracking Spreadsheet.

10.0 REFERENCES

1. *Waste Isolation Pilot Plant Hazardous Waste Facility Permit, Waste Analysis Plan,* New Mexico Environment Department, Santa Fe, New Mexico

2. DOE/LLW-217, *DOE Waste Treatability Group Guidance*, Idaho Falls, Idaho, INEL-Lockheed Idaho Technologies

3. DOE/WIPP-02-3122, *Transuranic Waste Acceptance Criteria for the Waste Isolation Pilot Plant*, Carlsbad, New Mexico, U.S. DOE, 2004

4. *Interim Guidance on Ensuring that Waste Qualifies for Disposal at the Waste Isolation Pilot Plant*, U.S. DOE, Carlsbad, 1997

5. Public Law 102-579, *The Waste Isolation Pilot Plant Land Withdrawal Act* (as amended)

6. DOE/TRU-13-3425, *Annual Transuranic Waste Inventory Report – 2013*, Carlsbad, New Mexico, U.S. DOE, Carlsbad Field Office

7. CCP-PO-001, *CCP Transuranic Waste Characterization Quality Assurance Project Plan*, Carlsbad, New Mexico, Nuclear Waste Partnership, LLC.

8. CCP-TP-005, *CCP Acceptable Knowledge Documentation*, Carlsbad, New Mexico, Nuclear Waste Partnership, LLC.

9. DOE/WIPP 01-3194, TRUPACT-ll Content Codes (TRUCON)

10. U.S. Atomic Energy Commission AEC Manual: Chapter 0511, *Radioactive Waste Management*, AEC, 1973

11. DOE Order 435.1, *Radioactive Waste Management*, U.S. DOE, Environmental Management, 2001

12. DOE Order 5820.1, *Management of Transuranic Contaminated Materials* and DOE Order 5820.2A, *Radioactive Waste Management*, U.S. DOE, 9/30/82 and 2/6/84

13. CCP-AK-LANL-005, *Central Characterization Project Acceptable Knowledge Summary Report For Los Alamos National Laboratory TA-55 Non-Hazardous Heterogeneous Debris, Waste Stream: LA-NHD01.001*

14. CCP-PO-003, *CCP Transuranic Authorized Methods for Payload Control (CCP CH-TRAMPAC), Carlsbad, New Mexico, Nuclear Waste Partnership, LLC.*

15. Title 40 CFR, Part 261, *Identification and Listing of Hazardous Waste*

16. CCP-PO-002, *CCP Transuranic Waste Certification Plan,* Carlsbad, New Mexico, Nuclear Waste Partnership, LLC.

17. CCP-AK-LANL-009, *Central Characterization Program Acceptable Knowledge Summary Report For Los Alamos National Laboratory Chemistry and Metallurgy Research (CMR) Facility Waste Streams*: *LA-MHD03.001, LA-CIN03.001, LA-MIN05-V.001,* Nuclear Waste Partnership, Carlsbad, New Mexico

18. Title 40 CFR, Part 761, *Polychlorinated Biphenyls (PCBs) Manufacturing, Processing, Distribution in Commerce, and use Prohibitions*

19. 42 U.S. Code 10101, *Nuclear Waste Policy Act of 1982,* U.S. Congress

20. CCP-AK-LANL-007*, Los Alamos National Laboratory Pu-238 Contaminated Mixed Heterogeneous Debris, Waste Stream LA-MHD02.001*

11.0 AK SOURCE DOCUMENTS

Source Document Tracking Number	Title
C001	Assay of U-234
C002	Vent and Closure dates for TWISP containers submitted to WWIS
C005	TA-55 Pu-238 Processes Issues and SMEs (Acceptable Knowledge Personnel Interview Form)
C009	Electronic Communication from the Author
C010	Interview with R. Gutierrez, SME, re: P/S Code PE
C011	Interview with Dale Soderquist, SME re: P/S Code DA
C014	Interview with J. Milewski, SME, re: P/S Code ELW
C017	Interview with B. Martinez, SME, re: P/S Codes RAP, RAP2, FSPF, PF, JA, and BC
C018	Interview with J. Simpson, SME, re: P/S Code RL
C019	Interview with G. Zaker, SME, re: P/S Code MA and Chemicals Used in Machining
C020	Interview with G. Zaker, SME, re: P/S Code CA
C023	Interview with G. Jarvinen re: P/S Codes AD, APD
C026	Interview with L. Avens re: P/S Codes MAS, SA
C027	Interview with B. Zwick and J. Byrd re: P/S Codes AC1 and AC2
C031	Interview with C. Davis re: P/S Code SMP
C033	Interview with J. Foxx re: P/S Codes RD, NCD, WM, and XO/XO
C035	Interview with R. Masen re: P/S Code ME
C037	Interview with D. Wulff re: P/S Code XO/XO
C038	Interview with John Musgrave – TA-55 Miscellaneous Operations, RD&D Processes
C039	Interview with J. Foxx re: Process inputs to P/S Code AD
C040	Interview with J. Foxx re: P/S Codes PB, PuBe, CC, MB, MS, FF, BF, and other issues
C041	Interview with J. Foxx re: Use of Lead in P/S Codes DOP
C047	Interview with F. Hampel re: Metal Operations Process AK; Information on Chemical Use in P/S Code FF
C054	Air Sparging to Eliminate Pyrophoric Sodium
C056	Layers of Packaging in TA-55 Combustible TRU Waste
C057	Commingling of Defense and Nondefense TRU Waste
C061	Interview with J. Foxx re: Vanadium, Vanadium Pentoxide, TA-55-19, TA-55-30
C062	Wire Twist-Tie and Plastic Electrical Tie Bag Closure
C064	Air Sparging to Eliminate Pyrophoric Sodium
C065	WACCC Audit Finding #1 (April 27-May 1, 1987)
C066	Interview with F. Hampel re: Information on Chemical Use in P/S Code FF
C067	Interview with J. Foxx re: Sources of Cs-137, Pa-231, and Cm-244 in TA-55 waste
C068	Interview with J. Foxx re: Timeline for disposal of TA-55 waste with P120
C069	Ac-227 Drums
C073	Interview of J. Foxx re: Sources of Cs-137 and Pa-231 in TA-55 Waste
C076	Memo to P. Rogers re: “Secondary Radionuclides and Toxic Metals in TA-55 TRU Waste”
C079	Interview of J. Foxx re: P/S Codes PPD, UA, VD, IN, and WE

Source Document Tracking Number	Title
C080	Collection of Correspondence, Comments, and AK Summaries
C081	Interview with J. Foxx re: P/S Code DO
C082	Interview with J. Foxx and Supporting Documentation re: Defense Relationship of TA-55 Waste
C083	Interview with J. Foxx, SME re: P/S Codes
C085	Interview with M. West of NMT-2 and G. Bird of NMT-2 re: P/S Codes SBB and SCB
C087	Answers to Questions About Pyrochemical Processes
C089	Interview with J. Foxx re: Pu-238 and Effluent to TA-50
C092	Interview with J. Foxx re: CLS-1 Solvents
C094	Interview with T. Hayes of TA-55 Nitrate Operations re: Draft AK Summary for TA-55 Nitrate Operations, 12-19-99 (attached)
C095	Comments from T. Hayes and J. Foxx on the Acceptable Knowledge Summary for TA-55 Nitrate Operations
C096	Response to comments on the AK Summary for TA-55 Nitrate Operations
C098	Interview with J. Foxx re: P/S Code PY
C100	Memo with Attachments to K. Dziewinski re: Material Type Isotopic Compositions
C101	AK Isotopic Files for Input to NDA Radioassay Spreadsheets
C102	Interview with R. Simpson re: P/S Codes CN, CO, CT, EL, FF, ID, OB, OM, MOX, RS
C104	Interview with J. Foxx re: P/S UA
C105	Interview with J. Foxx re: P/S Codes AO, EVAC and WLT
C108	Interview with J. Foxx re: Secondary radionuclides used in P/S Code PI
C113	AK Interview with Jim Foxx re: P/S Code FF, Use of Kynar, Portland Cement, Code HRA, 40 mm Gun
C117	A Few Issues
C121	Detailed Chemical Evaluation MHD01.001
C122	Be Contamination
C124	Interview with Jim Fox Regarding Material Type 83 used at TA-55
C125	Decay Corrected Values for LANL Heat Source Plutonium
C129	Jim Foxx's Review and Comments on CCP-AK-LANL-006
C130	Jim Foxx's Review and Comments on Nitrate and Pyrochemical/Chloride Operations Process Flow Diagrams
C131	Jim Foxx's Review and Comments on Draft Process Flow Diagrams
C132	Pu-239 Operations Detailed Process Flow Diagrams
C133	Radiological Evaluation of Waste Stream LA-MHD01.001 Based on the Addition of Waste Stream LA-MHD02.01
C135	Interview with Site Personal Performing VE and PID Repackaging Regarding Potential for High Dose Rate Waste from TA-55
C136	Interview with Dennis Wulff Regarding Potential for High Dose Rate Waste from TA-55
C138	Addition of Mixed Inorganic and Organic Process Solids (Waste Stream # LA-CIN01.001) to Acceptable Knowledge Report AK6
C139	Calculation of Individual and Total Radionuclide Masses and Activities for Waste Stream # LA-CIN01.001
C140	Interview with Gerry Veazey Regarding the TA-55 Cement Fixation Process
C142	Opening of Drum (#8260) of Retrieved TA-55 Cement Waste

Source Document Tracking Number	Title
C143	Documentation Re Evaluation of TRU Waste Can Drums Retrieved from TA-54, Area G
C144	Interview with Dennis Wulff Regarding the Packaging of Pu-238 Waste at TA-55
C145	Evaluation of LANL Pu-238 Waste Management Practices
C147	RCRA and Chemical Evaluation for LANL Waste Streams LA-MHD01.001 and LA-CIN01.001
C149	Fiberboard Drum Liners Used During Repackaging
C150	Secondary Waste Discussions to be Added to AK4 and AK6
C152	Interview with J. Foxx re: Future Waste Generation for Waste Streams LA-MHD01.001 and LA-MIN02-V.001
C153	Evaluation of Volume, Period Generation, and Calculation of Individual and Total Radionuclide Masses and Activities for Waste Stream LA-MHD01.001
C154	Evaluation of Volume, Period Generation, and Calculation of Individual and Total Radionuclide Masses and Activities for Waste Stream LA-MIN02-V.001
C155	RCRA and Chemical Evaluation for LANL Waste Stream LA-MIN02-V.001
C156	Email to M. J. Papp re: Material Reclamation Project
C157	Prohibition on PCB waste lifted from LANL
C163	Change of LA Waste Stream Designation For TRU Oversize Crates at TA-54
C164	Information on Packaging Changes
C165	Decontamination and Volume Reduction System (DVRS) Information
C171	Homogeneity of LANL Waste Stream LA-CIN01.001
C172	Evaluation of Volume, Period Generation, and Calculation of Individual and Total Radionuclide Masses and Activities for Waste Stream LA-MIN04-S.001
C173	RCRA and Chemical Evaluation for LANL Waste Stream LA-MIN04-S.001
C174	Projected Future Waste Generation for Waste Stream LA-MIN04-S.001
C175	Evaluation of Volume, Period Generation, and Calculation of Individual and Total Radionuclide Masses and Activities for Waste Stream LA-MHD01.001
C176	Email from Kapil Goyal Regarding Compact Fluorescent Bulbs
C177	Secondary Waste Generated by the Remediation/Repackaging Processes at Dome 231 and WCRRF
C178	Drum Washing of Drums Retrieved from Below-Grade
C179	Evaluation of Volume and Calculation of Individual and Total Radionuclide Masses and Activities for Waste Stream LA-MHD01.001
C180	Evaluation of Volume and Calculation of Individual and Total Radionuclide Masses and Activities for Waste Stream LA-CIN01.001
C181	Evaluation of Volume and Calculation of Individual and Total Radionuclide Masses and Activities for Waste Stream LA-MIN02-V.001
C182	Evaluation of Volume and Calculation of Individual and Total Radionuclide Masses and Activities for Waste Stream LA-MIN04-S.001
C184	Determination of Flammable VOCs For LANL TA-55 Mixed Transuranic Waste, Waste Stream LA-CIN01.001
C185	TA-54 Building 412 vs. DVRS Facility
C186	Letter on Material Type Isotopic Composition
C187	Memorandum to Pamela Rogers, Transuranic Database Modifications
C188	Memorandum to Pam Rogers; Layers of Packaging in TA-55 Combustible TRU Waste

Source Document Tracking Number	Title
C189	Secondary Radionuclides and Toxic Metals in TA-55 TRU Waste
C190	Memo to TWCP Records Center: Commingling of Defense and Nondefense TRU Waste
C192	Memorandum to Pamela Rogers; Acceptable Knowledge of Pu-238 Waste Generated at the Los Alamos Plutonium Facility, TA-55
C194	Comments from Jim Foxx on the Draft Pu-238 AK Summary Report (dated November 1999)
C195	Interview with Jim Foxx: Pu-238 and Effluent to TA-50
C196	Email from Jim Foxx: RCRA Codes for Pu-238
C197	Interview with Jim Foxx and Gary Rinehart Relating to the RCRA Characterization and Management of Pu-238 Liquids and P/S Code Operations
C198	Interview with Jim Foxx Regarding P/S Code PI
C199	Interview with Gordon Jarvinen Regarding TA-55 Miscellaneous Operations – RD&D Processes
C200	Jim Foxx's comments on Draft Acceptable Knowledge Summary for TA-55 Nitrate Operations
C201	Comment Resolution for Nitrates AK Summary Report (dated 2/25/00)
C202	Memorandum to B.T. Reich: Air Sparging to Eliminate Pyrophoric Sodium
C203	Memorandum to B.T. Reich: Experimental data on calcium pyrophoricity in salts
C204	Interview with Jim Foxx; Segregation of non-defense wastes from defense wastes
C205	Interview with Jim Foxx; Answers to questions of use of Ag, disposal of ash and resins, and use of gases
C206	Acceptable Knowledge Personnel Interview with Jim Foxx: Disposal of Spray Cans Used in Gloveboxes
C207	Interview with Jim Foxx re: Volatile RCRA-Listed Metals
C208	Acceptable Knowledge Personnel Interview with Jim Foxx: Sources of Cs-137 and Pa-231 in TA-55 TRU Waste
C209	Interview with J. Foxx re: Sources of Cs-137, Pa-231, and Cm-244 in TA-55 TRU Waste
C210	AK Personnel Interview of Lisa Pansoy-Hjelvik, Description of P/S Code ASP
C211	Interview with Gary Rinehart regarding P/S code WS Operations
C212	Memorandum to Ed Wilmont, Pu-238 Waste at TA-55
C213	AK Personnel Interview with Jim Foxx: Information on P/S Codes PPD, UA, VD, IN, and WE
C214	AK Personnel Interview with Jim Foxx: RD&D Processes (RD, NCD, WM)
C215	Email From Wayne Punjak to Pamela Rogers: Ac-227 Drums
C216	Memorandum to RMDC; Vent and Closure dates for TWISP containers submitted to WWIS
C219	Interview with Jim Foxx: Material Type 83 used at TA-55
C220	Jim Foxx's Review and Comments on Draft Process Flow Diagrams
C221	Detailed Pu-238 Operations Process Flow Diagrams
C222	Decay Corrected Values for LANL Heat Source Plutonium
C223	Record of Communication for interview with Jim Foxx: All Process Wastes
C224	Addition of 7 Containers to Waste Stream LA-MIN04-S.001
C225	Evaluation of Additional Containers for waste stream LA-MHD01.001

Source Document Tracking Number	Title
C226	Waste Packaging Issues with CCP-AK-LANL-006, Waste Stream LA-CIN01.001 (TA-55 cemented waste packaged in cans and monoliths)
C228	Evaluation of Los Alamos National Laboratory Circumferentially Taped Slip-Lid Cans (>4 Liters)
C230	Memo: Legacy TA-55 Nitrate Salt Wastes at TA-54 - Potential Applicability of RCRA D001/D002/D003 Waste Codes
C231	Email RE: Nitrate Salt Processing Guidance
C232	Evaluation of Volumes and Calculations of Individual and Total Radionuclide Masses and Activities for Waste Streams LA-MHD01.001, LA-CIN01.001, LA-MIN02-V.01, and LA-MIN04-S.001
C233	Evaluation of Additional Repackaged Containers for Waste Stream LA-MHD01.001
C234	Evaluation of Additional Containers for Waste Stream LA-CIN01.001
C235	Evaluation of Additional Containers for waste stream LA-MIN02-V.001
C236	Evaluation of Additional Containers for waste stream LA-MIN04-S.001
C237	Containment Vessel Weight Analysis and Acceptable Knowledge Document
C238	Memorandum of Understanding - Roles and Responsibilities for Transuranic Material Experiments on the Z Machine
C239	Email RE: # of Shots
C240	Email Re: Future Projected Volume for LA-MHD01.001
D002	Acceptable Knowledge Report for Legacy Debris TA-55 Waste Streams Containing Pu-239
D003	Hazardous Waste Facility Contract with DOE, University of California & Summary of Modifications
D004	Attachment A (Waste Analysis Plan) of the LANL Hazardous Waste Permit
D007	Process Acceptable Knowledge Report for Chloride Operations at TA-55
D008	Acceptable Knowledge Report for Newly Generated Waste from Nitrate Operations at TA-55
D009	Acceptable Knowledge Report for Newly Generated Waste from Miscellaneous Operations at TA-55
D010	Acceptable Knowledge Report for Newly Generated Waste from Special Processing Operations at TA-55
D011	Acceptable Knowledge Report for Newly Generated Waste from Metal/Pyrochemical Operations at TA-55
D013	Los Alamos National Laboratory Transuranic Waste Characterization Acceptable Knowledge Information Summary (AKIS)
D014	TA-55 Facility Safety Analysis Report (FSAR), Excerpt (Chapter 1 missing)
D017	Draft Acceptable Knowledge (Report) for TA-55 Nitrate Operations (and Interview comments from Tim Hayes)
D018	Transuranic Waste Interface Document for the Waste Characterization, Reduction, and Repackaging Facility and the Radioactive Materials Research, Operations, and Demonstration Facility
D019	Waste Management Plan for the 40-mm Powder Breach Project
D023	TA-55 Plutonium Facility Acceptable Knowledge Report
D024	TA-55 Transuranic Waste Interface Document
D025	Acceptable Knowledge Report for Debris Waste Streams Containing Pu-239
D026	Acceptable Knowledge Information Summary For LANL Transuranic Waste Streams

Source Document Tracking Number	Title
D028	Process Acceptable Knowledge Report for Pyrochemical Processes at TA-55
D029	Process Acceptable Knowledge Report for Metal Operation Processes at TA-55
D030	Process Acceptable Knowledge Report for Special Processing at TA-55
D032	Process Acceptable Knowledge Report for Miscellaneous Operations at TA-55
D034	Waste Management Site Plan
D036	Process Knowledge Report for Nitrate Operations at TA-55
D037	Los Alamos TRU Waste Certification Plan for Newly Generated TRU Waste
D041	Acceptable Knowledge Information Summary for LANL Transuranic Waste Streams
D044	Lightweight Radioisotope Heater Unit (LWRHU) Production for the Cassini Mission
D045	Final Safety Analysis Report for TA-55 NMT
D048	Wastes from Plutonium Conversion and Scrap Recovery Operations
D049	40-mm Powder Breech Project, TA-55 Bldg PF-4, Waste Management Plan
D050	Waste-form Development for Conversion to Portland Cement at LANL Technical Area 55
D055	Rocky Flats Environmental Technology Site Backlog Waste Reassessment Baseline Book – Waste Form 34 Pyrochemical Salts
D056	TWISP Final Report
D057	Processing Waste Acceptance Criteria Exception Forms
D058	Review and Completion of the TWSR
D059	Environmental Protection: Managing Waste; Air Quality; Ecological and Cultural Resources
D060	Repackaging Plutonium-238 High Dose Rate Material for Waste Disposal
D062	Upgrade and Performance Testing for the LINC Systems at TA-54 Area G
D063	Project Management Objectives for Pit 9 TRU Waste Retrieval
D064	Retrieval Plan for TA-54, Area G TRU Waste for Pit 9
D065	TA-54, Area G Pit 9 Waste Description
D066	TA-54, Area G Pit 9 Waste Description
D067	TA-54, Area G Trenches A-D Waste Description
D068	TA-54 Area G Documented Safety Analysis
D070	Wastes from Plutonium Conversion and Scrap Recovery Operations
D071	Final Safety Analysis Report for TA-55 NMT
D073	Lightweight Radioisotope Heater Unit (LWRHU) Production for the Galileo Mission
D074	Lightweight Radioisotope Heater Unit (LWRHU) Production for the Cassinni Mission
D075	Sampling and Analysis Project Validates Acceptable Knowledge on TA-55-43, Lot No. 01
D076	Acceptable Knowledge Summary Report for Waste Streams TA-55-43, TA-55-44, TA-55-45, TA-55-46, TA-55-47
D077	Process Acceptable Knowledge Report for Miscellaneous Operations at TA-55
D078	Process Acceptable Knowledge Report for Nitrate Operations at TA-55
D079	Process Acceptable Knowledge Report for Special Processing at TA-55
D080	Process Acceptable Knowledge Summary Report for Plutonium-238 Operations at TA-55
D081	AK Report for NG Waste from Metal/Pyrochemical Operations at TA-55
D082	Institutional Plan FY2002-FY2007

Source Document Tracking Number	Title
D083	Acceptable Knowledge Information Summary for LANL Transuranic Waste Streams
D084	Acceptable Knowledge Report for Debris Waste Streams Containing Pu-239
D085	Determination of H2 Diffusion Rates through Various Closure on TRU Waste Bag-Out Bags
D089	Amount of Zeolite Required to Meet the Constraints Established by the EMRTC Report RF 10-13: Application to LANL Evaporator Nitrate Salts
D090	Results of Oxidizing Solids Testing - EMRTC Report FR 10-13
D091	Solution Package Scope Definition REPORT-72, Salt Waste (SP #72) Rev 1
D092	Generator Knowledge Report for the Plutonium Isentropic Compression Experiments Containment Systems
D093	Preparing Samples for Materials Characterization
D094	Panel Preparation for Z Experiments
DR001	Discrepancy Resolution Waste Stream Assignment
DR004	Discrepancy Resolution Non-Mixed TA-55 Pu-239 Debris Drums
DR005	Acceptable Knowledge Source Document Discrepancy Resolution - Homogeneous Solids in Containers S818280, S818308, S822622, S818309, S832485, S862359, S802994, and S811632
DR007	Acceptable Knowledge Source Document Discrepancy Resolution – Layers of Confinement
DR008	Acceptable Knowledge Source Document Discrepancy Resolution – TA-55 Homogeneous Solids Containing Greater Than 50% Heterogeneous Debris
DR029	Acceptable Knowledge Source Document Discrepancy Resolution – Drum No. 86309 Contained a Small Lighter Fluid Can with ~ 65 ml of liquid
DR043	Miscellaneous Debris Items in LA-CIN01.001 (cemented) Container No. 53706
DR044	Removal of 114 Heterogeneous Drums from Cemented Waste Stream (LA-CIN01.001)
DR048	Acceptable Knowledge Source Document Discrepancy Resolution – Waste Stream LA-MHD01.001 Radiological Characterization
M002	Review of Headspace Gas Data from Pre-WAP Analyses for Additions to AK
M006	Pit Production
M011	Waste Determination Report for Waste Stream TA-55-43 Lot No. 01
M012	Waste Profile Form Guidance
M013	Waste Generator Guidance for Completing the TRU Waste Storage Record (TWSR)
M014	General Waste Management Requirements
M015	Managing Radioactive Waste
M016	Hazardous and Mixed Waste
M017	Final Documentation for RadWaste ORACLE Database's List of Acceptable Radioisotopes, Specific Activities, Categories and Regulatory Limits
M018	Los Alamos National Laboratory Waste Profile System Forms
M019	Generator Documentation
M023	Procedure Review Sheets for 410-MPP, "Electrorefining of Plutonium Metal-Crac Cell"
M024	Procedure Review Sheets for 435-MPP, "Reverse Cell Electrorefining (R&D Project)"
M026	Coalesence of Plutonium Metal (Excerpts) and Procedure Review Sheets
M028	Procedure Review Sheets and Excerpts from Salt Stripping of Electrorefining Salts Using Oxygen/Argon

Source Document Tracking Number	Title
M029	Procedure Review Sheets and Excerpts from Electrorefining of Plutonium Metal, Nominal Six Kilogram Scale
M030	Measuring Physical Properties (Excerpt)
M032	Acceptable Knowledge Personnel Interview Form - Metal Operations
M037	Multiple-Cycle Direct Oxide Reduction
M041	Procedure Review Sheets for Revs 0-5 of "Electrorefining of Plutonium Metal," Doc. # 258-MPP-R00
M043	Procedure Review Sheet for Procedure 290-MPP-R02
M044	Procedure Review Sheets for Procedure 216-MPP-R01 "Oxalate Precipitation of Ion-Exchange Eluates"
M045	Procedure Review Sheets for Procedure 215-MPP-R01, "Oxalate Precipitation of Plutonium from Nitrate Solutions"
M048	Procedure Review Sheets for Procedure 230-MPP-R01, "Hydroxide Precipitation for Oxalate Filtrates"
M050	Procedure Review Sheet for 474-REC-R01, "Process Research and Development Facilities”
M053	Procedure Review Sheet for 426-REC-R00, "Residue Leaching"
M054	Procedure Review Sheet for 461-REC-R00, "Nitrate Anion Exchange"
M057	Procedure Review Sheet for 431-REC, "Procedure for Disposal of Oils Containing Recoverable Amounts of Pu in the Form of (U, Pu) Carbides"
M061	Process Review Sheet for RAB-MS-2000, "Carbothermic Process Material Specification for Uranium Oxide Powder (Depleted)"
M064	Process Accountability Flow Documents for Various Nitrate Processes
M067	Procedure Review Sheet for 430-REC, "Recovery of Contaminated Platinum"
M069	Procedure Review Sheet for 420-REC, "Processing of Contaminated Solids"
M072	Procedure Review Sheets for 444-REC, "Dissolving Chloride Melt Portion of Electrorefining Residues”
M074	Procedure 474-CLO, Hydroxide Precipitation of Chloride Waste Streams
M076	Hydroxide Precipitation of the Plutonium in Chloride Waste Streams
M080	Interview with J. Foxx re: Solvent Extraction Developmental Work
M084	Procedure 437-REC, "Polystyrene Cube Processing"
M085	Procedure 445-REC, "Preferential Dissolution of Uranium Oxides from a Uranium-Plutonium Oxide Mixture"
M086	Procedure 490-REC, "Catalyzed Electrochemical Plutonium Oxide Dissolver (CEPOD)"
M088	Procedure 423-REC, "Ash Leaching"
M089	Procedure 431-REC, "Leaching of Contaminated Metals in Nitric Acid"
M090	Procedure 421-REC, "Pickling or Surface Leaching" and "Leaching of Noncombustible Materials in Nitric Acid"
M092	Procedure 490-REC, "Mediated Electro-Oxidation of Low-Level Organic Waste" and "Catalyzed Electrochemical Plutonium Oxide Dissolver"
M093	Procedure 427-REC, "Incinerator Ash R&D Facility"
M095	Procedure 447-REC, "Dissolution of Impure Plutonium Dioxides, Filter Residues, and Glovebox Sweepings in Hot HNO3-HF"
M096	Procedure 472-REC, "Nitrate Anion Exchange for the Rich Column Material System"
M097	Procedure 471-REC, "Nitrate Anion Exchange for the Lean Residue System"

Source Document Tracking Number	Title
M098	Procedure 470-REC, "Nitrate Anion Exchange for the Rich Residues Ion Exchange Column"
M099	Procedure 473-REC, "Nitrate Anion Exchange for the Dissolved Solids (DS) System"
M103	Procedure 480-REC, "Peroxide Precipitation"
M112	Procedure 407-MPP, Chlorination of Plutonium Compounds
M113	Procedure 420-MPP, Reduction of PuO_2 to metal
M116	Review Sheet for Procedure 445-MPP, "Coalescence of Plutonium Metal"
M118	Review Sheet for Procedure 209-MPP, "Pickling, Leaching, and Dissolution"
M123	Procedure 213-MPP, Conversion of Plutonium Oxalate to Oxide using heat lamp and hot plate
M125	Procedure 217-MPP, Peroxide precipitation
M126	Procedure 226-MPP, Dissolving Chloride Melt Portion of Electrorefining Residues
M127	Procedure 232-MPP, Oxalate Precipitation of Pu from Hydrochloric solutions
M129	Procedure 224-MPP, Chlorination of Plutonium Compounds
M130	Procedure 251-MPP, Multiple-cycle Direct Oxide Reduction
M131	Procedure 273-CLO, Purifying and Recovering Pu by Chloride anion exchange
M132	Procedure 242-MPP, Precipitation of Plutonium Oxalate in Hydrochloric Acid
M134	Direct Oxide Reduction R&D
M137	Procedure HS-NMT9-PP-42, "Particle Size Analysis of Oxide Powders Procedure"
M142	Procedure 435-REC, "Processing Lapping Oil and Similar Organics"
M144	Procedure 491-REC, "Advanced Testing Line for Actinide Separations (ATLAS) Unit Operations"
M151	Procedure 464-Rec, "Peroxide Precipitation"
M153	Development of Control Charts for the Evaporator Bottoms Newly Generated Waste Stream from TA-55
M154	Miscellaneous MSDSs
M156	Project 2010 Container Specific Database Information for LA-MHD01.001
M157	Project 2010 Database Summary of Waste Codes from LA-MHD01.001
M158	Project 2010 Database Information Waste Item Descriptions Summary
M159	Project 2010 Container Specific Database Information - Area G Reported Radionuclides
M160	LANL Project 2010 Summary of AK Discrepancies
M164	Procedure Review Sheet for Identification of Potential Hazards Associated with Metallographic Operations in Rooms G104 and G107
M169	Procedure Review Sheet - Comminution and Nickel Addition Procedures for Uranium Carbide or Uranium-Plutonium Carbide
M172	Procedure Review Sheet for Manual Pellet Pressing Procedure for Uranium Carbide or Uranium-Plutonium Carbide Powders
M174	Procedure Review Sheet for Procedure for Measuring the Density of Sintered Fuel or Insulator Pellets by a Water Immersion Technique
M180	Procedure Review Sheet - Hydroxide Precipitation of Chloride Solutions Containing Organic Chemicals
M181	Procedure Review Sheet - Oxalate Precipitation of Plutonium from Chloride Solutions
M182	Procedure Review Sheet - Purification and Recovery of Plutonium by Chloride Anion Exchange

Source Document Tracking Number	Title
M184	Procedure Review Sheet - Dicesium Hexachloro Plutonate (DCHP)
M185	Procedure Review Sheet - Head End Processing of Aqueous Chloride Plutonium
M186	Procedure Review Sheet - Plutonium Recovery from Chloride Solutions by Oxalate
M189	Procedure Review Sheet - Vessel Handling and Unloading
M200	Plutonium Electrorefining
M202	Preparation of Pu Metal by the Fluoride Reduction Process
M206	Procedure Review Sheet - Salt Stripping of Electrorefining Salts
M212	Procedure Review Sheet - Six Foot Sphere Handling and Unloading
M215	LANL Hard Copy TWSRs for LA-MHD01 and LA-MHD02 from 2500 Set
M216	LANL Hard Copy TWSRs for LA-MHD01 and LA-MHD02 from AK6 Remaining Set
M217	LANL Hard Copy TWSRs for LA-MHD01 and LA-MHD02 from AK7 Remaining Set
M218	LANL Hard Copy TWSRs for LA-MHD01 and LA-MHD02 from Imagic Printout Set
M219	Electronic image of TWSRs and RSWD Forms from Imagic Software
M220	Vent Date Information Sources
M222	CONCERT Database
M223	Design of Hydrothermal Waste Treatment Units for Operation at Pressures from 1 to 1,000 Bar
M224	LANL Hard Copy RSWDs and TWSRs for LA-MHD01 and LA-MHD02
M226	LANL Hard Copy RSWDs and TWSRs for LA-MHD01 and LA-MHD02
M236	TA-55 Cemented RSWDs/TWSRs
M238	NUGEN Drum TWSRs
M241	Drum Spreadsheet for Additional LA-MHD01.001 Containers
M242	TA-55 Waste Stream LA-MIN02-V.001 RSWDs/TWSRs and Drum Spreadsheet
M252	TA-55 Cement Fixation Drum Logbook
M273	LA-MHD01.001 TWSRs
M274	TWSRs for Containers 8000 Series
M275	TA-55 NUGEN TWSRs
M276	TA-55 VE NUGEN TWSRs
M279	TA-55 Waste Stream LA-MIN04-S.001 RSWDs/TWSRs, Drum Spreadsheet, and BDRs
M280	Pit 9 Waste Information
M281	Trenches A-D logbook
M283	Assembled Tables taken from Milliwatt Generator Project Progress Reports
M284	MSDSs for Pu-238 Operations
M285	Process Flow Diagram for Routine Pu-238 Heat Source Production - Fuel Fabrication
M286	Particle Size Analysis of Oxide Powders
M287	Process Flow Diagram for Metallography
M288	Process Flow Diagram for Pu-238 Scrap Processing
M289	Introductory Glovebox Transfer of an EP-60 into and EP-61
M290	Decontamination of Ir Using Molten MgCl2
M291	Process Flow Diagram for Recovery of Pu-238 Oxide from Contaminated Iridium
M292	Dissolution of Ir by Electrochemical Methods
M293	Process Flow Diagram for Pu-238 Waste Solidification

Source Document Tracking Number	Title
M294	Recovery of Plutonium-238 from Sucrose Solutions
M295	Documentation for RadWaste ORACLE Database's List of Acceptable Radioisotopes, Specific Activities, Categories and Regulatory Limits
M296	Generator Documentation (RSWD/TWSRs)
M298	Concert Database Query, Physical Parameter Inventory Analysis for Waste Stream LA-MHD02.002
M299	Thermal Decomposition of Cellulose Items
M300	General Waste Management Requirements
M301	Hazardous and Mixed Waste
M302	Managing Radioactive Waste
M303	Waste Profile Form Guidance
M304	Waste Generator Guidance for Completing the TRU Waste Storage Record (TWSR)
M306	The Actinide Research Quarterly, Magnetic Levitation Results in High-Purity Plutonium Metal.
M307	Acceptable Knowledge Isotopic Ratios (AKIR) database, Versions 2.0 and 2.1
M308	Pu-238 Defense Determination Resolution
M309	Radiological Discrepancy Report
M310	RCRA EPA Hazardous Waste Code Assignment Discrepancy Report
M312	CCP-AK-LANL-007 Document Conversion To CCP-AK-LANL-006 Source Documents
M316	Record of Communication - Secondary Waste Added During Remediation and Repackaging Operations
M317	Waste Stream LA-MIN04-S.001 Radionuclide Calculations
P001	Nitric Acid Process Evaporator
P005	Thorium Fluoride Precipitation
P008	Cement Fixation of Process Residues in 55-Gallon Drums (Excerpts)
P011	Cement Fixation of Process Residues in One-Gallon Cans (Excerpts)
P012	Organic Liquid Emulsification
P014	Casing Enriched Plutonium
P024	Nitrate Anion Exchange
P025	Dissolution and/or Leaching of Various Materials in Hydrochloric Acid
P026	Oxalate Precipitation of Plutonium from Hydrochloric Acid Solutions
P027	Purification and Recovery of Plutonium by Chloride Anion Exchange
P028	Hydroxide Precipitation
P029	Procedure for Pyroredox Processing of Spent Electrorefining Anodes (P/S RA)
P033	Procedure "Cleaning Requirements for Large Components" P/S EL
P034	Procedure "Cleaning for Small Components"
P036	Procedure "Fabrication and Inspection of He-Bonded Fuel Elements" P/S EL
P042	Procedure "Sodium Bonding" P/S EL
P044	Procedure "Encapsulation of Radioactive Isotopes" P/S WE
P045	Procedure "Plasma Chemical Reactor" P/S PCH
P046	Procedure "Safe Operating Procedure for Pit Disassembly" P/S MW, PD, SRL
P049	Procedure "Ultrasonic Degreaser" P/S MA
P051	Procedure "Operating the Autoclave Hot Isostatic Press" P/S BA

Source Document Tracking Number	Title
P052	Procedure "Cleaning of SP-100 Fuel Pin Components"
P053	Procedure "Pit Disassembly" P/S SRL
P056	Procedure "Heat Treatment of SP-100 Components"
P064	Procedure "Hydrothermal Processing"
P065	Procedure "Superacid Research and Development"
P067	Procedure "Room 208 Purification Process Development"
P069	Procedure "Super Oxidizer Fluorination of Ash"
P070	Procedure "Operation of the Plutonium FOOF Loop"
P071	Procedure "Operation of the Plutonium Fluorination Loop"
P076	Procedure "Research, Development, and Demonstration Facilities"
P077	Procedure "Research, Development, and Demonstration Facilities"
P078	Procedure "Sensors and Instrumentation Development"
P080	Procedure "Organoactinide R&D"
P081	Procedure "Actinide Chemistry Research and Development"
P083	Procedure "Plutonium Chlorination"
P085	Procedure "Developmental Chloride Solvent Extraction Process"
P090	TA-55 Generator Attachment to the Los Alamos TRU Waste Certification Plan
P091	Attachment 3 to the TRU Waste Certification Plan, R05
P092	TA-55 Transuranic Waste Interface Document for Debris Waste
P094	Documenting Acceptable Knowledge For Legacy Waste Items
P095	Inspecting, Packaging, Rejecting, and Remediating Transuranic Waste for WIPP and for TA-54 Safe Storage
P096	TA-55 Waste Management, TWCP-351
P097	Performing Visual Inspections of TRU Waste
P098	Packing TRU Waste Containers
P102	Procedure 406-GEN, "Standard Operating Procedure for the Waste Management at TA-55, CMB-11 Facility"; also LA-UR-01-6170
P103	Thorium Fluoride Precipitation
P104	Electrorefining of Plutonium Metal, Nominal Six Kg Scale
P105	Chloride Melt Preparation for Electrorefining and Fused Salt Extraction
P109	Acceptable Knowledge Personnel Interview Form re: Pyrochemical waste stream
P110	Acceptable Knowledge Personnel Interview Form re: Pyrochemical waste stream
P117	Waste Visual Examination and Packaging
P118	Acceptable Knowledge Documentation
P125	Characterization of Direct Oxide Salts
P147	Electrochemical Systems Operations, NMT-15 Hazard Control Plan
P148	Machining of Special Nuclear Materials in Glovebox Enclosures, NMT-15 Hazard Control Plan
P152	Cement Fixation of Process Residues in One-Gallon Cans
P153	Cement Fixation of Process Residues in 55-Gallon Drums
P154	Standard Waste Visual Examination and Prohibited Item Disposition
P155	Pu-238 Residue Solidification
P156	Thermal Decomposition of Cellulose Items Contaminated with Plutonium-238

Source Document Tracking Number	Title
P157	Direct Oxide Reduction of Pu-238 Oxide
P158	Prohibited Items Disposition Dome 231 Permacon
P159	Processing Waste in the Waste Characterization Glovebox
P160	Introducing and Removing Items and Samples from the Glovebox Systems in PF-4
P161	TA-55 Waste Management
P162	TA-55 Waste Management Requirements
P163	Nuclear Materials Packaging
P164	Inspecting, Labeling, and Preparing TRU Waste Containers
P165	Performing Visual Inspections of TRU Waste
P166	Packing TRU Waste Containers
P167	Packing TRU Waste Containers
P168	Sealing TRU Waste Containers
P169	Sealing TRU Waste Containers
P170	Material Reclamation
P171	Inspecting and Preparing a Drum
P172	Inspecting the Cement and Performing the Drum-in and Drum-out
P173	Waste Generating Instruction for Heat-Source Plutonium Solid TRU Waste
P174	Trenches A – D Retrieval Operations
P175	Sort, Segregate, Size Reduction, and Repackaging Activities
P177	TA-55 Waste Management
P178	Attachment 3 to the Los Alamos TRU Waste Certification Plan for Newly Generated TRU Waste
P179	TA-55 Generator Attachment to the Los Alamos TRU Waste Certification Plan
P180	Sampling PuO2 Procedure
P181	Ceramography of 238 PuO2 Fuel Samples
P182	238 Pu Waste Solidification
P183	Cement Fixation of Process Residues in 55-Gallon Drums
P185	Cement Fixation of Process Residues in One-Gallon Cans
P186	Organic Liquid Emulsification
P187	Characterization of Direct Oxide Salts
P188	Standard Operating Procedure for the Waste Management at TA-55
P189	Direct Oxide Reduction of 238 PuO2
P190	Advanced Testing Line for Actinide Separations (ATLAS) Unit Operations
P192	TA-54 Area G TRU Crate SSSR Activities
P194	TA-54-231 PermaCon Upgrades
P195	Sort, Segregate, Size Reduction, and Repackaging Activities
P196	TA-54 Area G Sludge Remediation Activities
P197	TA-54 Area G TRU Crate SSSR Activities
P198	WCRRF Waste Characterization Glovebox Operations
P199	TA-54-375 TRU Oversized Box Processing Capability Project
P203	TA-54 Area G TRU Corrugated Metal Box SSSR Activities
P204	TA-54 Area G Ten-Drum Overpack Container Operations

Source Document Tracking Number	Title
U002	Review of RTR Data From Pre-WAP Analysis For AK
U004	Process Status Data from Area 55 WMD & Cert. Database
U005	Twenty-Five Years of Radioactive Waste Cementation at Los Alamos National Laboratory
U007	Review of RTR Data From Pre-WAP Analysis for AK

Figure 1. Location of LANL Site

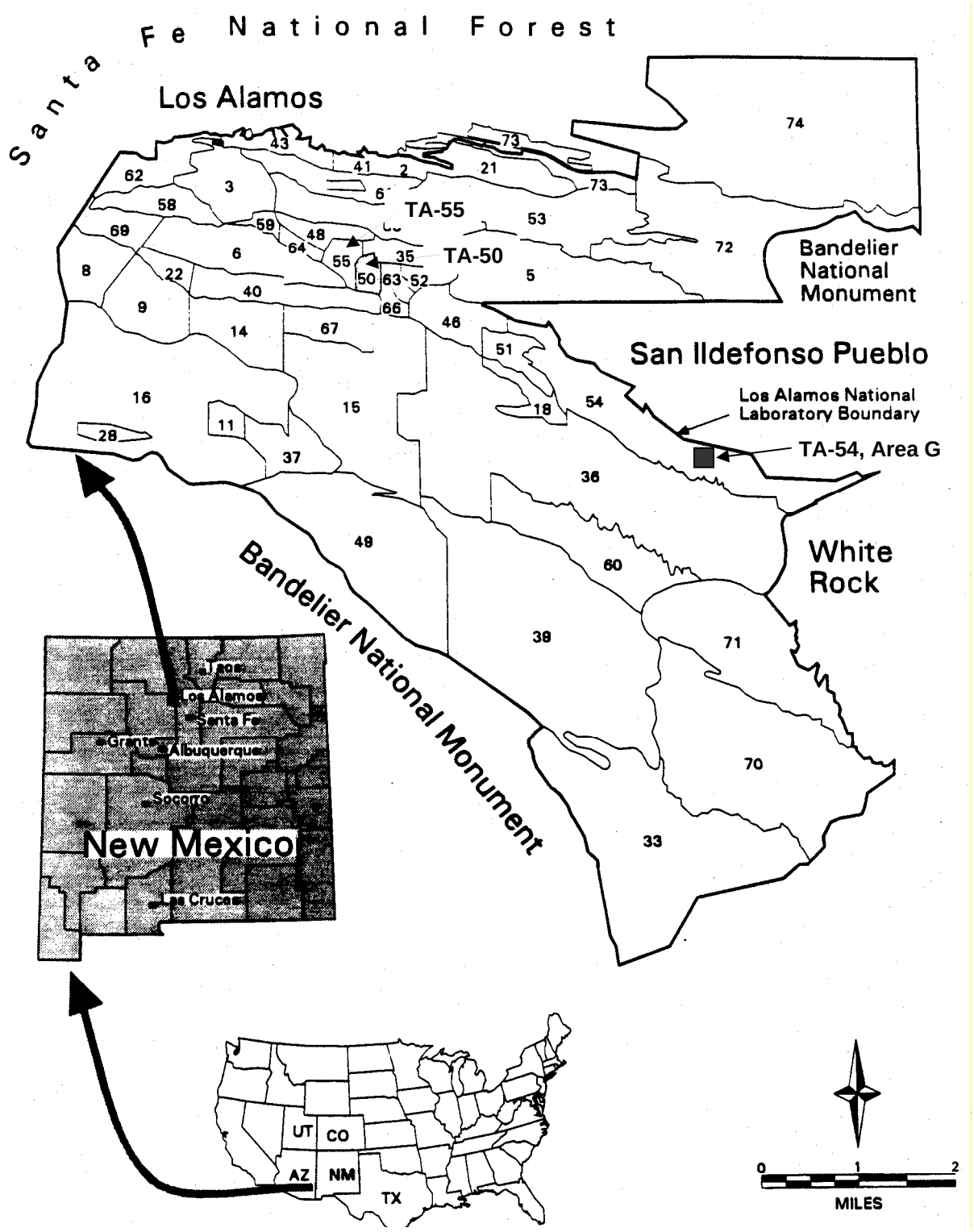

Figure 2. Location of the PF-4 at TA-55 LANL Site

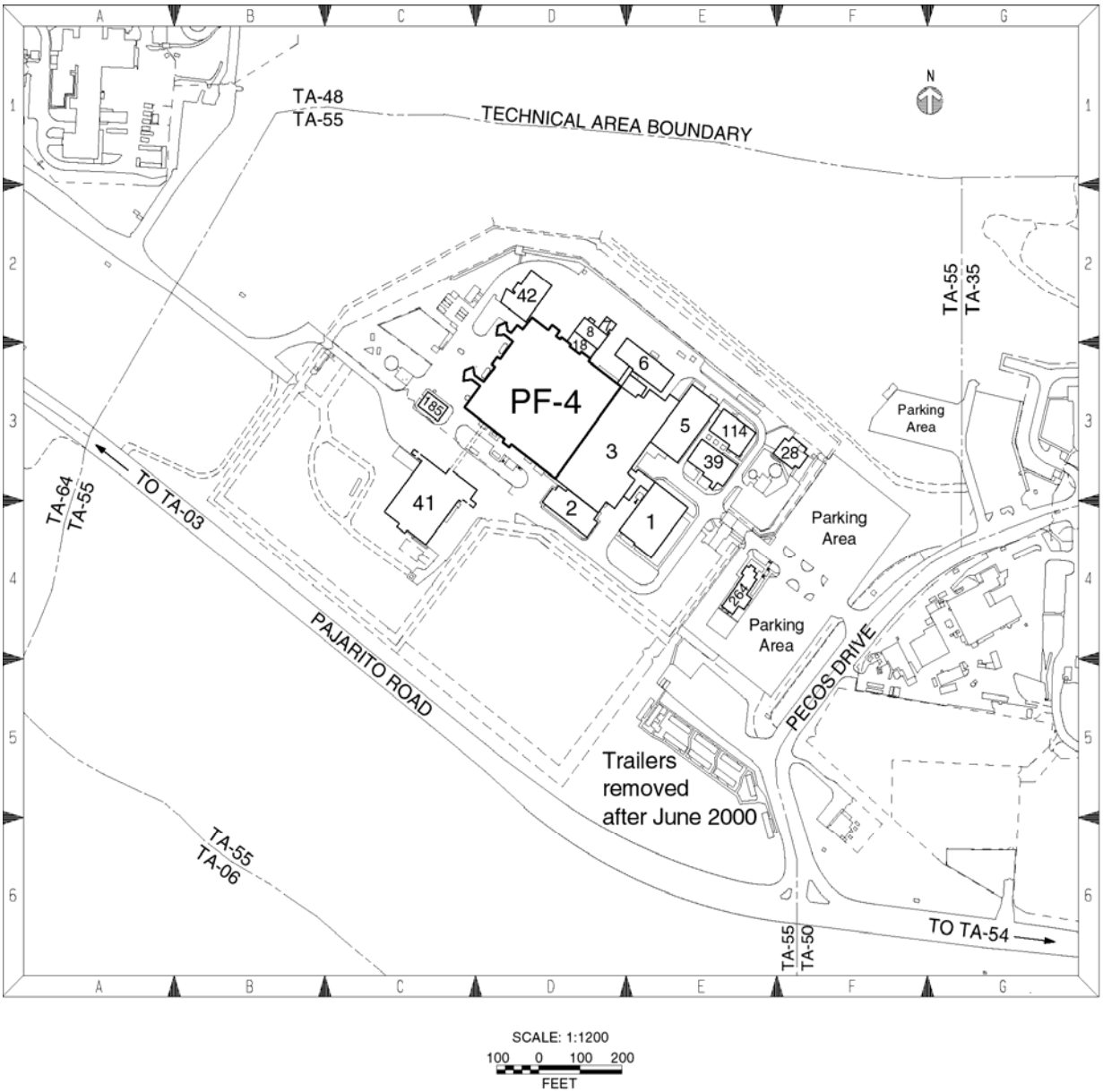

Figure 3. RSWD Code Descriptions Table

RSWD Code	Definition	Waste Stream
A10	Graphite	LA-MHD01.001
A14	Combustible Decon Waste	LA-MHD01.001
A15	Cellulosics	LA-MHD01.001
A16	Plastics	LA-MHD01.001
A17	Rubber Materials	LA-MHD01.001
A18	Combustible Lab Trash	LA-MHD01.001
A19	Combined Combustible/Non-Combustible Lab Trash	LA-MHD01.001
A20	Hydrocarbon Oil – Liquid (Absorbed)	LA-MIN02-V.001
A21	Silicon-Based – Liquid (Absorbed)	LA-MIN02-V.001
A25	Leached Process Residues	LA-CIN01.001
A26	Evaporator Bottoms/Salts	LA-CIN01.001
A27	Nitrate Salts	LA-MIN04-S.001
A28	Chloride Salts	LA-MIN04-S.001
A30	Property Number Equipment	LA-MHD01.001
A31	Non-Property Number Equipment	LA-MHD01.001
A35	Combustible Building Debris	LA-MHD01.001
A36	Noncombustible Building Debris	LA-MHD01.001
A47	Slag and Porcelain	LA-MHD01.001
A50	Metal Crucibles, Scrap, Dies	LA-MHD01.001
A51	Precious Metal	LA-MHD01.001
A52	Scrap Metal	LA-MHD01.001
A55	Filter Media	LA-MHD01.001
A60	Other Combustibles	LA-MHD01.001
A61	Other Non-combustibles	LA-MHD01.001
A70	Chemical Waste	LA-MIN02-V.001
A77	Vermiculite (Before 1985)	LA-MIN02-V.001
A95	Glass	LA-MHD01.001

Figure 4. Item Description Codes (IDC) Table

Item Description Code	Definition	Description
001	Mixed metal scrap and combustibles (primarily metals or metal equipment along with its combustible components and combustibles generated during decommissioning, sectioning equipment, or packaging)	IDC 001 waste is comprised of several types of metal scrap and incidental combustibles generated at various TAs and size reduced at the WCRR Facility. The waste consists mostly of metals or metal equipment, either whole or sectioned, and lesser amounts of combustible components. In addition, small volumes of combustibles generated during decommissioning, sectioning, and packaging are present. The waste forms primarily include gloveboxes, process equipment, and ductwork from decommissioning operations. Gloveboxes may include gloves, wiring, plastic, glass windows, plastic wrapping, and lead shielding.
004	Combustible solids (may contain small fraction of noncombustible solids)	IDC 004 waste is comprised of combustible waste such as paper, rags, plastic, and rubber, including plastic-based and cellulose-based waste generated at the TA-55 Plutonium Facility. Plastic-based waste includes, but may not be limited to, tape, polyethylene, and vinyl; gloves; plastic vials; polystyrene; Tygon tubing; polyvinyl chloride plastic; Teflon products; Plexiglas; and dry box gloves (unleaded Neoprene base). Cellulose-based waste includes, but may not be limited to, rags, wood, paper, cardboard, laboratory counts and coveralls, booties, and cotton gloves, and similar miscellaneous materials. IDC 004 waste may also contain a small fraction of noncombustible solids (e.g., scrap metals, metal lids).
005	Noncombustible scrap (may contain small fraction of combustible solids)	IDC 005 waste includes metals and non-metals. The non-metal wastes included glass, fiberglass heating mantles, porcelain crucibles, ceramic furnace tube inserts, and leaded glovebox gloves. Discarded HEPA filters are identified as IDC 005 waste. This waste is generated in PF-4 at TA-55. A small fraction of combustible waste, such as plastics (mainly packaging), may also be present.

Figure 4. Item Description Codes (IDC) Table (Continued)

Item Description Code	Definition	Description
005(P1)	Leaded rubber and metal waste	IDC 005(P1) consists of leaded rubber waste and metal waste, including lead-lined glovebox gloves discarded along with metal waste, such as motors and tools.
005(P2S)	Salt waste	IDC 005(P2S) waste consists of used salts from pyrochemical processes such as electrorefining, molten salt extraction, salt stripping, fluoride reduction, and direct oxide reduction carried out at PF-4 at TA-55. A small fraction of combustible waste, such as plastics (mainly packaging), may also be present.
006	Cemented process residues (process-leached solids, filter cakes, evaporator bottoms, etc., stabilized in Portland cement)	IDC 006 waste includes solidified inorganic and organic process solids generated from facility and equipment operations and maintenance. This waste may include process leached solids, ash, filter cakes, salts, metal oxides, fines, evaporated bottoms, or up to six liters of emulsified solvents and oils stabilized in Portland or gypsum cement. This waste also includes spent samples received from TA-3, CMR Building.

Figure 5. TA-55 Process/Status Code Index Table

P/S Code	P/S Name	Operations Process Report in which this P/S Code is Described*
AAP	Accelerated Aging of Plutonium	Metal Operations
AC	Actinide chemistry, R&D	Miscellaneous Operations
AC1	Actinide chemistry, R&D	Miscellaneous Operations
AC2	Actinide chemistry, R&D	Miscellaneous Operations
AC3	Actinide chemistry, R&D	Miscellaneous Operations
ACC	Ammonium chloride conversion	Special Processing Operations
ACD	Cascade dissolver	Special Processing Operations
ACL	Analytical chemistry laboratory	Miscellaneous Operations
AD	Actinide processing demonstration	Miscellaneous Operations
AL	Ash leach	Nitrate Operations
AO	Assembly operation	Metal Operations
AO	Americium processing calcination	Nitrate Operations
AP	Americium purification	Nitrate Operations
APD	Actinide processing demonstration	Miscellaneous Operations
ARI	ARIES	Metal Operations
AS	Anode heel dissolution	Nitrate Operations
ASP	Aqueous Scrap Processing	Pu-238 Operations
AT	Ash testing	Nitrate Operations
ATL	Advanced test line for actinide separation RD&D	Nitrate Operations
AX	Solution assay	Miscellaneous Operations
BA	Basement isopress	Metal Operations
BAC	Bacterial decomposition of cellulose items	Nitrate Operations
BC	Physical properties	Metal Operations
BF	Unknown name for P/S Code	Nitrate Operations
BL	Blending	Nitrate Operations
BM	Burning metal	Nitrate Operations
BT	Burst testing	Metal Operations

Figure 5. Process/Status Code Index Table (Continued)

P/S Code	P/S Name	Operations Process Report in which this P/S Code is Described*
BU	Button burning	Nitrate Operations
C1	Pu-238 Heat Source Calorimetry	Pu-238 Operations
CA	Casting	Metal Operations
CC	Calcination	Nitrate Operations
CD	Hydroxide cake dissolution	Nitrate Operations
CF	Cement fixation	Nitrate Operations
CH	Characterization	Nitrate Operations
CK	RD&D volatile fluoride Pu recovery	Miscellaneous Operations
CL	Crucible processing	Chloride Operations
CLRD	Aqueous chloride R&D	Chloride Operations
CLS	Accountable CLS chloride solutions	Chloride Operations
CN	C-N-O analysis	Metal Operations
CO	Comminution	Metal Operations
COD	Chlorinated oxide dissolution	Nitrate Operations
COL	Chlorinated oxide leach	Nitrate Operations
CP	Chloride processing	Special Operations
CPOD	Catalyzed electrochemical plutonium oxide dissolver	Nitrate Operations
CR	Crushing and pulverizing	Nitrate Operations
CRD	Chlorination/reduction RD&D	Pyrochemical Operations
CS	Chloride solutions	Chloride Operations
CSE	Chloride solvent extraction	Chloride Operations
CT	Compatibility testing	Metal Operations
CV	RD&D experimental chlorination processes	Miscellaneous Operations
CW	Caustic waste	Chloride Operations
CX	Chloride anion exchange	Chloride Operations
CXL	Experimental chloride extraction line	Chloride Operations

Figure 5. Process/Status Code Index Table (Continued)

P/S Code	P/S Name	Operations Process Report in which this P/S Code is Described*
DA	Alloy development Pu items	Metal Operations
DF	DS furnace and oxide preparation	Nitrate Operations
DO	Dissolution of oxide	Special Processing Operations
DOP	Detector oxide preparation	Metal Operations
DP	Dry processing	Nitrate Operations
DS	Ion exchange	Nitrate Operations
DT	John Ward R&D	Metal Operations
ECHM	Electrochemistry	Miscellaneous Operations
ED	Cascade dissolver	Nitrate Operations
EDC	Electrolytic decontamination	Miscellaneous Operations
EL	Element loading	Metal Operations
ELW	Experimental laser welding	Metal Operations
EM	Electron microscopy	Metal Operations
EOC	Experimental oxide characterization	Miscellaneous Operations
ER	Electrorefining	Pyrochemical Operations
ETD	Experimental thermal decomposition	Nitrate Operations
EV	Evaporator	Nitrate Operations
EVAC	Evacuation and bake out	Metal Operations
EXT	Extraction RD&D	Miscellaneous Operations
FA	Americium processing	Nitrate Operations
FC	Canning	Nitrate Operations
FDL	FOOF demonstration loop	Miscellaneous Operations
FF	Fuel fabrication	Metal Operations
FLU	Fluorination RD&D	Miscellaneous Operations
FSPF	Special furnace operations	Metal Operations
FX	Cement to drum	Nitrate Operations
GI	Pellet grinding & inspection	Metal Operations

Figure 5. Process/Status Code Index Table (Continued)

P/S Code	P/S Name	Operations Process Report in which this P/S Code is Described*
GMS	Open gradient magnetic separation	Nitrate Operations
GPHS	General Purpose Heat Source (GPHS)	Pu-238 Operations
HC	Calcination	Nitrate Operations
HCD	Hydroxide cake dissolution	Nitrate Operations
HD	Hydroxide cake dissolution	Nitrate Operations
HG	Pu removal by mercury	Metal Operations
HGMS	High gradient magnetic separation	Nitrate Operations
HP	Cement fixation	Nitrate Operations
HRA	Hanford Reservation Material	Nitrate Operations
HRS	High resolution spectroscopy	Miscellaneous Operations
IA	Impure americium holding for discard	Nitrate Operations
IAM	Inspection and measurement	Special Processing Operations
IB	Matrix study of pyrochemical salts	Miscellaneous Operations
ICP	ICP-AES analysis	Miscellaneous Operations
ID	Immersion density	Metal Operations
IE	Isotope enrichment	Miscellaneous Operations
IHL	Induction Heating and Levitation	Pu-238 Operations
IN	Inspection	Metal Operations
IS	Incinerator	Nitrate Operations
ITF	Impact test facility	Metal Operations
ITF4	Impact test facility	Metal Operations
ITF7	Impact test facility	Metal Operations
IX	Ion exchange	Special Processing Operations
JA	Gas isostatic press	Metal Operations
KBTF	Kolsky bar test facility	Metal Operations
LC	Uranium plutonium processing	Nitrate Operations

Figure 5. Process/Status Code Index Table (Continued)

P/S Code	P/S Name	Operations Process Report in which this P/S Code is Described*
LD	Chloride leach & dissolution	Chloride Operations
LG1	Non combustible leach	Nitrate Operations
LG2	Hydroxide cake dissolution	Nitrate Operations
LI	XF6 experimental measurements	Miscellaneous Operations
LIBS	Laser-induced breakdown spectroscopy system	Miscellaneous Operations
LR	Ion exchange	Nitrate Operations
M1, M2, MM, M4	Materials Management	Miscellaneous Operations
MA	Machining	Metal Operations
MAG	Magnetic separation	Nitrate Operations
MAS	RD&D experimental processes	Nitrate Operations
MB	Nitric dissolution of molten salts	Chloride Operations Nitrate Operations
MBC	Crystal	Metal Operations
ME	Metallography	Miscellaneous Operations
MELL	Mediated electro-oxidation of LLW	Nitrate Operations
MF	Metals furnace	Nitrate Operations
MIS	Material identification and surveillance	Miscellaneous Operations
ML	Non-Pu metal leach	Nitrate Operations
MO	Metal oxidation, room 429	Pyrochemical Operations
MOX	Mixed oxide fuel production	Metal Operations
MP	Metal preparation	Pyrochemical Operations
MPD	Cascade dissolver	Nitrate Operations
MR	Material Reclamation	Pu-238 Operations
MS	Molten salts purification dissolution	Chloride Operations
MTL	Metallography-Plutonium-238 Operations	Pu-238 Operations
MW	Metal working	Metal Operations
NC	Noncombustible leach	Nitrate Operations

Figure 5. Process/Status Code Index Table (Continued)

P/S Code	P/S Name	Operations Process Report in which this P/S Code is Described*
NCD	Nonconforming drums	Miscellaneous Operations
NEPTUNIUM	Neptunium	Pyrochemical Operations
NL	Noncombustible leach	Nitrate Operations
NP	Nitrate processing	Special Operations
NR	Nitrate recovery	Nitrate Operations
OB	Oxide blending	Metal Operations
OD	Oxide dissolution	Nitrate Operations
OH	Hydroxide precipitation	Nitrate Operations
OM	Oxygen to metal ratio determination	Metal Operations
OR	Direct oxide reduction	Pyrochemical Operations
OY	Oxalate precipitation	Nitrate Operations
P1	Routine Pu-238 Heat Source	Pu-238 Operations
PA	Passivation	Nitrate Operations
PAF	Passivation furnaces	Nitrate Operations
PB	Pu-beryllium source recovery	Chloride Operations
PCH	Plasma chemistry	Metal Operations
PD	Pit disassembly	Metal Operations
PE	Sputtering process	Metal Operations
PF	Plutonium surfaces	Metal Operations
PH	Thermal hydride/dehydride	Metal Operations
PI	Preparation of isotopes	Special Processing Operations
PIG	Welding	Metal Operations
PK	Pickling and nitrate holding	Pyrochemical Operations
POSM	Processing out-of-specification material	Special Operations
PP	Pellet Production	Pu-238 Operations
PPD	Pu pellet dissolution	Special Operations
PR	Peroxide precipitation	Nitrate Operations
PRR	Pyrochemical residue recovery	Chloride Operations
PS	Peroxide precipitation of MSE salts	Nitrate Operations

Figure 5. Process/Status Code Index Table (Continued)

P/S Code	P/S Name	Operations Process Report in which this P/S Code is Described*
PSE	Plutonium standards extrusion	Metal Operations
PT	Plutonium-thorium separation	Nitrate Operations
PTP	Plutonium trichloride preparation	Pyrochemical Operations
PTS	RD&D pretreatment study	Nitrate Operations
PUB	Pu/Be source recovery	Chloride Operations
PX	Pyrochemical R&D	Special Operations
R8	Routine Pu-238 Solidification/Recovery of Pu-238 from Sucrose	Pu-238 Operations
RA	Recovery of anodes	Pyrochemical Operations
RAP	Research alloy preparation	Metal Operations
RAP2	Research alloy preparation	Metal Operations
RASS/RSS	Raman spectroscopy system	Miscellaneous Operations
RB	Roasting and blending	Nitrate Operations
RBJ	Roasting and blending Jr	Nitrate Operations
RC	Rotary calciner	Nitrate Operations
RCI	Recovery of Pu-238 from contaminated Iridium	Pu-238 Operations
RCM	Rich column material ion exchange	Nitrate Operations
RD	Repackaging into retrievable drums	Miscellaneous Operations
RFX	Ion exchange	Nitrate Operations
RL	Radiochemical coating	Metal Operations
RM	Reduction to metal	Special Processing Operations
RO	Oil recovery	Nitrate Operations
RR	Ion exchange	Nitrate Operations
RS	Pellet sintering	Metal Operations
SA	Super acid RD&D	Miscellaneous Operations
SB	Scrap burning	Special Processing Operations
SBB	Ca/Al scrubbing RD&D	Special Processing Operations

Figure 5. Process/Status Code Index Table (Continued)

P/S Code	P/S Name	Operations Process Report in which this P/S Code is Described*
SC	Cascade dissolver, G437	Nitrate Operations
SCB	Chlorination Ca/Al scrubbing RD&D	Pyrochemical Operations
SCP	Routine Pu-238 Scrap Processing	Pu-238 Operations
SD	Salt distillation	Pyrochemical Operations
SE	Solvent extraction	Chloride Operations
SL	Scrap leaching	Special Processing Operations
SMA	Surveillance machining	Metal Operations
SMIS	Long-Term Storage/Compatibility Testing	Miscellaneous Operations
SMP	SP mounting preparation	Miscellaneous Operations
SO	Super oxidizer, FOOF program	Miscellaneous Operations
SP	Scrap dissolution, G438	Nitrate Operations
SRL	Special recovery line	Metal Operations
SS	Salt stripping	Pyrochemical Operations
SSD	Special scrap dissolution	Nitrate Operations
SSMD	SS material development	Pyrochemical Operations
STF	Standard fabrication	Miscellaneous Operations
SURF	Plutonium surfaces	Metal Operations
SX	Americium processing silicon removal	Nitrate Operations
TDC	Thermal decomposition of cellulose items	Nitrate Operations
TSC	Thermal stabilization of cellulosic material	Nitrate Operations
TIGR	Thermally induced gallium removal	Metal Operations
UA	Uranium fabrication	Metal Operations
UCON	Uranium conversion	Metal Operations
UPS	Uranium/plutonium separation	Nitrate Operations

Figure 5. Process/Status Code Index Table (Continued)

P/S Code	P/S Name	Operations Process Report in which this P/S Code is Described*
US	Uranium separation for solid solution feed	Nitrate Operations
US2	Uranium separation for non-solid solutions feed	Nitrate Operations
VC	Variable CSMO scrap dissolution	Nitrate Operations
VD	Vapor degreaser and sand blasting	Metal Operations
VP1	CSMO scrap dissolution	Nitrate Operations
VP2	Polycube processing	Nitrate Operations
VP3	Hydroxide precipitation	Nitrate Operations
VS	Confirmation, inspection & sampling	Miscellaneous Operations
VU	Vessel unloading	Special Processing Operations
VUL	Vessel unloading	Nitrate Operations
WD	Welding and Decontamination for GPHS	Pu-238 Operations
WE	Welding	Metal Operations
WLT	Welding leak test	Metal Operations
WM	Waste management	Miscellaneous Operations
WS	Pu-238 Direct Oxide Reduction	Pu-238 Operations
X0	Inactive or unspecified P/S material	Miscellaneous Operations
XES	X-ray energy spectroscopy	Miscellaneous Operations
XO	Inactive or unspecified P/S material	Miscellaneous Operations
XP	RD&D experimental processes	Miscellaneous Operations
ZD	Scrap oxide dissolution	Nitrate Operations

*Operations Process Reports: Chloride Operations (Reference D007), Metal Operation Processes (References D011 and D029), Miscellaneous Operations (References D009 and D032), Nitrate Operations (References D008 and D036), Pyrochemical Operations (References D011 and D028), Special Processing Operations (References D010 and D030), and Pu-238 Operations (Reference D080). Timelines for the P/S Codes can be found in these Operations Process Reports.

Figure 6. Example Generator Container Specific Documentation

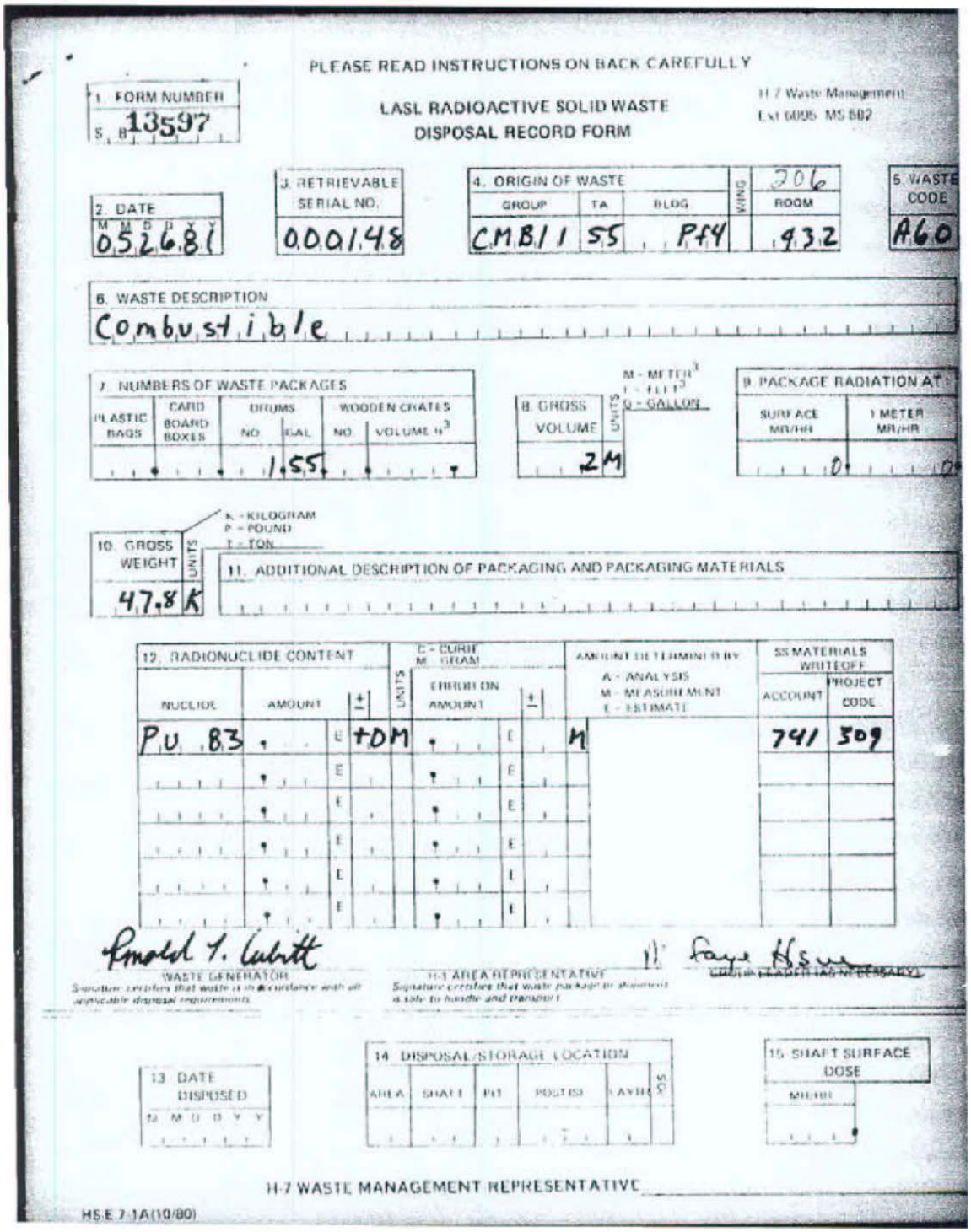

PLEASE READ INSTRUCTIONS ON BACK CAREFULLY

LASL RADIOACTIVE SOLID WASTE DISPOSAL RECORD FORM

H-7 Waste Management Ext 6095 MS 882

1. FORM NUMBER: S B 13597

2. DATE (M M D D Y Y): 05 26 81

3. RETRIEVABLE SERIAL NO.: 000148

4. ORIGIN OF WASTE: GROUP CMB11; TA 55; BLDG PF4; WING 206; ROOM 432

5. WASTE CODE: A60

6. WASTE DESCRIPTION: Combustible

7. NUMBERS OF WASTE PACKAGES: PLASTIC BAGS; CARD BOARD BOXES; DRUMS NO. GAL; WOODEN CRATES NO. VOLUME ft³: 1.55

8. GROSS VOLUME: 2 M (UNITS: M - METER³, F - FEET³, G - GALLON)

9. PACKAGE RADIATION AT: SURFACE MR/HR: 0; 1 METER MR/HR: 0

10. GROSS WEIGHT: 47.8 K (UNITS: K - KILOGRAM, P - POUND, T - TON)

11. ADDITIONAL DESCRIPTION OF PACKAGING AND PACKAGING MATERIALS

12. RADIONUCLIDE CONTENT (UNITS: C - CURIE, M - GRAM)

NUCLIDE	AMOUNT	±	UNITS	CURIE OR AMOUNT	±	AMOUNT DETERMINED BY (A - ANALYSIS, M - MEASUREMENT, E - ESTIMATE)	SS MATERIALS WRITEOFF ACCOUNT	PROJECT CODE
PU 83		E	+DM		E	M	741	309
		E			E			
		E			E			
		E			E			
		E			E			
		E			E			

Ronald T. Cubitt
WASTE GENERATOR
Signature certifies that waste is in accordance with all applicable disposal requirements

H-1 AREA REPRESENTATIVE
Signature certifies that waste package or shipment is safe to handle and transport

Faye Hsue
CHIEF (OR DEPUTY OR DESIGNEE)

13. DATE DISPOSED (M M D D Y Y)

14. DISPOSAL/STORAGE LOCATION: AREA; SHAFT; PIT; POSITION; LAYER; SOS

15. SHAFT SURFACE DOSE: MR/HR

H-7 WASTE MANAGEMENT REPRESENTATIVE

HS-E 7-1A(10/80)

Figure 6. Example Generator Container Specific Documentation (Continued)

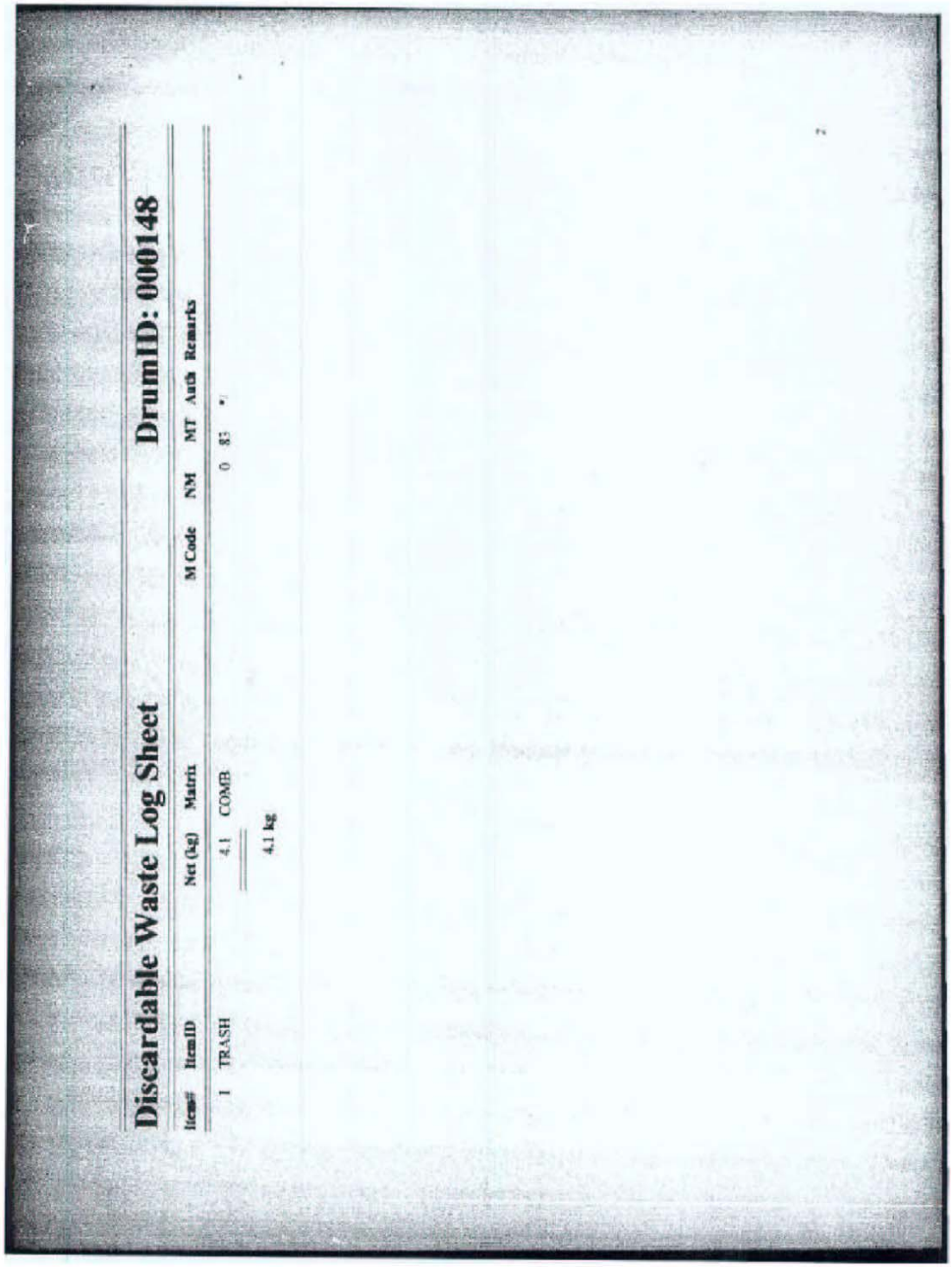

Discardable Waste Log Sheet **DrumID: 000148**

Item#	ItemID	Net (kg)	Matrix	M Code	NM	MT	Auth	Remarks
1	TRASH	4.1	COMB	0	85	*		
		4.1 kg						

Figure 6. Example Generator Container Specific Documentation (Continued)

Los Alamos
NATIONAL LABORATORY

TRU WASTE STORAGE RECORD

LA00000057745

1. GENERATOR'S PRE-USE VISUAL INSPECTION

Purchase Order # 2328415	Inspected Items		
This container has been visually inspected according to approved procedures and has been found to be free of damage that would make it unsuitable for TRU waste packaging.	[X] Ring, Bolt, and Nut	[X] Chime	[X] Dents
	[X] Lid and Gasket	[X] Gouges	[X] Paint
Name	Znumber 091564		Date NOV 23 1998

2. GENERATOR'S PACKAGE INFORMATION

Group NMT-7	Technical Area 55	Building PF-4	Program Code 8J0700 KG19 2000 1000	[ ] Off-Normal
Additional Information TID				

CONTAINER	LINER
[X] Steel Drum (*55 gal.*)	[X] None
[ ] Steel Drum (*85 gal.*)	[ ] 90 mil liner
[ ] Standard Waste Box	[ ] 125 mil liner
[ ] RH Canister	INTERNAL SHIELDING
[ ] Other (*Call TWCO*)	[X] None
[ ] Overpack	Type / Thickness (*in.*)
Carbon Filter ID 01 2080 / 02	

RADIONUCLIDE CONTENT			
Nuclide	Amount	Uncertainty	C=Curie M=Gram
PU-238	4.040E-3	1.867E-4	M
PU-239	3.788E+1	1.751E+0	M
PU-240	2.424E+0	1.120E-1	M
PU-241	8.079E-2	3.734E-3	M
PU-242	8.079E-3	3.734E-4	M
AM-241	6.423E-2	2.969E-3	M

Waste Profile Request Number	20283
Process Batch Code	NA
Gross Weight (*lb.*)	2.21E+2
Net Weight (*lb.*)	1.60E+2
Shipping Category	2001700110
LANL Waste Stream ID	TA-55-5
TRUCON Code	117C
Date Closed (*MMDDYY*)	DEC 2 1998

[ ] PDP Program Tracking No:

NONRADIOACTIVE HAZARDOUS MATERIALS		
Name	EPA Code	Quantity (*g*)
None		

Accumulation Start Date (*MMDDYY*)

The data in this section were collected, and the waste described herein was packaged and labeled according to approved procedures.

Name [redacted] Znumber [redacted] Date DEC 8 1998

3. GENERATOR SITE HEALTH PHYSICS INFORMATION

		Survey Date	Survey Meter Model	Property	Calibration Void Date
Gamma Dose Rate (*mrem/h*) (contact)	4.2E+0	DEC 8 1998	RO20	006469	APR 14 1999
Neutron Dose Rate (*mrem/h*) (contact)	5.0E-1	DEC 8 1998	PNR-4	Property Number 004904	APR 28 1999
Total Dose Rate (*mrem/h*) (contact)	4.7E+0				
Total Dose Rate (*mrem/h*) (1 meter)	2.0E-1				
Alpha Contamination (*dpm/100cm*^{2}) (*rem*)	0.0E+0				
Beta-Gamma Cont. (*dpm/100cm*^{2}) (*rem*)	0.0E+0				

The data in this section were collected according to approved procedures.

Name

Znumber [redacted] Date DEC 8 1998

Form 1562E (7/97) Printed FEB 12 99 11:04:08 by Page 1 of 2

Modifications to Computer Generated Data Invalidate this Form

Figure 6. Example Generator Container Specific Documentation (Continued)

Los Alamos
NATIONAL LABORATORY

DISCARDABLE WASTE
LOG SHEET

Item ID	Matrix	Pkg Wt (kg)	Qty	Volume (l)	MT	SNM(g)	Uncert(g)	Pg/Section/Ln OR Memo
[redacted]	Metal (Non-Pu Scrap)	8.49			52	10.697	1.558	8/14
	Metal (Non-Pu Scrap)	3.18			52	0.760	0.480	8/14
	Metal (Non-Pu Scrap)	10.28			52	0.775	0.423	8/14
	Metal (Non-Pu Scrap)	5.05			52	0.635	0.329	8/14
	Metal (Non-Pu Scrap)	23.42			52	1.035	0.290	8/14
	Metal (Non-Pu Scrap)	20.94			52	21.226	0.725	8/14
	MgO Crucible (Chloride)	0.59			52	1.901	0.026	8/21
	MgO Crucible (Chloride)	0.64			52	3.366	0.033	8/21

Total Pkg Wt (lbs)	160.03
Drum Tare (lbs)	60.96
Calc Gross Wt (lbs)	220.99
Meas Gross Wt (lbs)	221.08

MT	Total SNM	Total Uncert
52	40.395000	3.784000

Figure 6. Example Generator Container Specific Documentation (Continued)

TRU Waste Origination & Disposition Information

Itemid	Matrix					Date
[redacted]	Metal (Non-Pu Scrap)					NOV 19 1998
Quantity / Gross Wt (kg)	Tare Wt	Net Wt (kg)	Volume (l)			Process Status
7.50		7.50				BM
Generator			Znumber	Room		Phone
			[redacted]	208		7-2547
Waste Process	Assay		Combined into		Drumid	
Solid Waste Processing	NDA Laboratory				LA00000057745	

Beryllium	NO	Explosives	NO	PCB's	NO
Compressed Gases	NO	Free Liquids	NO	Particulates	NO
Corrosive	NO	Hazardous	NO	Pyrophorics	NO

Comments
bagout filter#249

Assay Information

Isotope	MT	SNM (g)	Uncert (g)	Mcode	Limit	SNM (g)/unit	Date	By
PU-239	52	10.697000	1.558000	N02	3.31	1.426	NOV 24 1998	

Justification Memos

Memo ID
NONE

Hazardous Materials

EPA Code	Material	Wt (g)
NONE		

History

Date	Name	Event		Comments
NOV 19 1998		CERTIFIED		
NOV 24 1998		PACKED	LA00000057745	
NOV 24 1998		CERTIFIED	added bagout filter #	

Figure 6. Example Generator Container Specific Documentation (Continued)

TRU Waste Origination & Disposition Information

Itemid	Matrix					Date
[redacted]	Metal (Non-Pu Scrap)					NOV 23 1998
Quantity / Gross Wt (kg) 2.80	Tare Wt	Net Wt (kg) 2.80	Volume (l)			Process Status EOC
Generator			Znumber [redacted]	Room 208		Phone 7-2547
Waste Process Solid Waste Processing		Assay NDA Laboratory	Combined into		Drumid LA00000057745	

Beryllium	NO	Explosives	NO	PCB's	NO
Compressed Gases	NO	Free Liquids	NO	Particulates	NO
Corrosive	NO	Hazardous	NO	Pyrophorics	NO

Comments
scrap metal Filter 497

Assay Information

Isotope	MT	SNM (g)	Uncert (g)	Mcode	Limit	SNM (g)/unit	Date	By
PU-239	52	0.760000	0.400000	N02	3.31	0.271	NOV 30 1998	

Justification Memos

Memo ID
NONE

Hazardous Materials

EPA Code	Material	Wt (g)
NONE		

History

Date	Name	Event	Comments
NOV 23 1998		CERTIFIED	
DEC 1 1998		PACKED	LA00000057745
DEC 1 1998		CERTIFIED	add fil

Figure 6. Example Generator Container Specific Documentation (Continued)

TRU Waste Origination & Disposition Information

Itemid [redacted]	Matrix Metal (Non-Pu Scrap)				Date NOV 23 1998
Quantity / Gross Wt (kg) 4.64	Tare Wt	Net Wt (kg) 4.64	Volume (l)		Process Status OM
Generator			Znumber [redacted]	Room 126	Phone 7-2370
Waste Process Solid Waste Processing	Assay NDA Laboratory		Combined into	Drumid LA00000057745	

Beryllium	NO	Explosives	NO	PCB's	NO
Compressed Gases	NO	Free Liquids	NO	Particulates	NO
Corrosive	NO	Hazardous	NO	Pyrophorics	NO

Comments
balance parts bagout filter#318

Assay Information

Isotope	MT	SNM (g)	Uncert (g)	Mcode	Limit	SNM (g)/unit	Date	By
PU-239	52	0.635000	0.329000	N02	3.31	0.137	DEC 1 1998	

Justification Memos

Memo ID
NONE

Hazardous Materials

EPA Code	Material	Wt (g)
NONE		

History

Date	Name	Event	Comments
NOV 23 1998		CERTIFIED	
DEC 2 1998		PACKED	LA00000057745
DEC 2 1998		CERTIFIED	added bagout filter #

Figure 6. Example Generator Container Specific Documentation (Continued)

TRU Waste Origination & Disposition Information

Itemid	Matrix				Date
[redacted]	Metal (Non-Pu Scrap)				NOV 17 1998
[redacted] 20.59	Tare Wt	Net Wt (kg) 20.59	Volume (l)		Process Status TIGR
Generator			[redacted]	Room 114	Phone 5-6161
Waste Process Solid Waste Processing	Assay NDA Laboratory		Combined into	Drumid LA00000057745	

Beryllium	NO	Explosives	NO	PCB's	NO
Compressed Gases	NO	Free Liquids	NO	Particulates	NO
Corrosive	NO	Hazardous	NO	Pyrophorics	NO

Comments
copper tubing and furnace parts filter 230,234

Assay Information

Isotope	MT	SNM (g)	Uncert (g)	Mcode	Limit	SNM (g)/unit	Date	By
PU-239	52	1.035000	0.290000	N02	3.31	0.050	NOV 23 1998	

Justification Memos

Memo ID
NONE

Hazardous Materials

EPA Code	Material	Wt (g)
NONE		

History

Date	Name	Event	Comments
NOV 17 1998		CERTIFIED	
NOV 23 1998		PACKED	LA00000057745
NOV 23 1998		CERTIFIED	add filter

Printed FEB 12 00 11:04:04 by BUSTAMANTE LM

Figure 6. Example Generator Container Specific Documentation (Continued)

TRU Waste Origination & Disposition Information

Tremid	Matrix				Date
[redacted]	Metal (Non-Pu Scrap)				NOV 17 1998
Quantity / Gross Wt (kg) 20.04	Tare Wt	Net Wt (kg) 20.04	Volume (l)		Process Status XO
Generator			Znumber [redacted]	Room 401	Phone 7-2572
Waste Process Solid Waste Processing	Assay NDA Laboratory		Combined into	Drumid LA00000057745	

Beryllium	NO	Explosives	NO	PCB's	NO
Compressed Gases	NO	Free Liquids	NO	Particulates	NO
Corrosive	NO	Hazardous	NO	Pyrophorics	NO

Comments
parts from furnaces, motors, pumps bagout filter #90,167

Assay Information

Isotope	MT	SNM (g)	Uncert (g)	Mcode	Limit	SNM (g)/unit	Date	By
PU-239	52	21.226000	0.725000	N02	3.31	1.059	NOV 30 1998	

Justification Memos

Memo ID
NONE

Hazardous Materials

EPA Code	Material	Wt (g)
NONE		

History

Date	Name	Event		Comments
NOV 18 1998		CERTIFIED		
DEC 2 1998		PACKED	LA00000057745	
DEC 2 1998		CERTIFIED		
DEC 2 1998		CERTIFIED	updated gross wt	

Figure 6. Example Generator Container Specific Documentation (Continued)

TRU Waste Origination & Disposition Information

Itemid	Matrix				Date
[redacted]	MgO Crucible (Chloride)				JUN 3 1998
Quantity / Gross Wt (kg)	Tare Wt	Net Wt (kg)	Volume (l)		Process Status
0.39	0.07	0.32			SS
Generator			Znumber	Room	Phone
			[redacted]	429	7-2577
Waste Process	Assay		Combined into	Drumid	
Solid Waste Processing	NDA Laboratory			LA00000057745	

Beryllium NO	Explosives NO	PCB's NO
Compressed Gases NO	Free Liquids NO	Particulates NO
Corrosive NO	Hazardous NO	Pyrophorics NO

Comments
changed Id. to be able to discard, caxbl1035 No filter #s legacy item

Assay Information

Isotope	MT	SNM (g)	Uncert (g)	Mcode	Limit	SNM (g)/unit	Date	By
PU-239	52	1.901000	0.026000	PAN1	8.30	5.941	JUN 9 1998	

Justification Memos

Memo ID
NONE

Hazardous Materials

EPA Code	Material	Wt (g)
NONE		

History

Date	Name	Event		Comments
JUN 9 1998		CERTIFIED		
JUN 9 1998		PACKED	LA00000056889	
JUN 9 1998		CERTIFIED		
SEP 29 1998		UNPACKED	LA00000056889	
SEP 29 1998		CERTIFIED		
SEP 29 1998		PACKED	LA00000056889	
SEP 29 1998		CERTIFIED	cert	
NOV 24 1998		UNPACKED	LA00000056889	
NOV 24 1998		PACKED	LA00000057745	

Figure 6. Example Generator Container Specific Documentation (Continued)

TRU Waste Origination & Disposition Information

Tremid	Matrix				Date
[redacted]	MgO Crucible (Chloride)				JUN 3 1998
Quantity	Gross Wt (kg)	Tare Wt	Net Wt (kg)	Volume (l)	Process Status
	0.55	0.05	0.50		SS
Generator			Znumber	Room	Phone
			[redacted]	429	7-2577
Waste Process		Assay	Combined into		Drumid
Solid Waste Processing		NDA Laboratory			LA00000057745

Beryllium NO	Explosives NO	PCB's NO
Compressed Gases NO	Free Liquids NO	Particulates NO
Corrosive NO	Hazardous NO	Pyrophorics NO

Comments
changed id to be able to discard, caxbl17-98 No filter #s legacy item

Assay Information

Isotope	MT	SNM (g)	Uncert (g)	Mcode	Limit	SNM (g)/unit	Date	By
PU-239	52	3.366000	0.033000	PAN1	8.30	6.732	JUN 1 1998	

Justification Memos

Memo ID
NONE

Hazardous Materials

EPA Code	Material	Wt (g)
NONE		

History

Date	Name	Event		Comments
JUN 9 1998		CERTIFIED		
JUN 9 1998		PACKED	LA00000056889	
JUN 9 1998		CERTIFIED		
SEP 29 1998		UNPACKED	LA00000056889	
SEP 29 1998		PACKED	LA00000056889	
SEP 29 1998		UNPACKED	LA00000056889	
SEP 29 1998		CERTIFIED		
SEP 29 1998		PACKED	LA00000056889	
SEP 29 1998		CERTIFIED	cert	
NOV 24 1998		UNPACKED	LA00000056889	
NOV 24 1998		PACKED	LA00000057745	

Printed FEB 12 99 11:04:06 by RUSTAMANTE LM

Figure 6. Example Generator Container Specific Documentation (Continued)

Figure 6. Example Generator Container Specific Documentation (Continued)

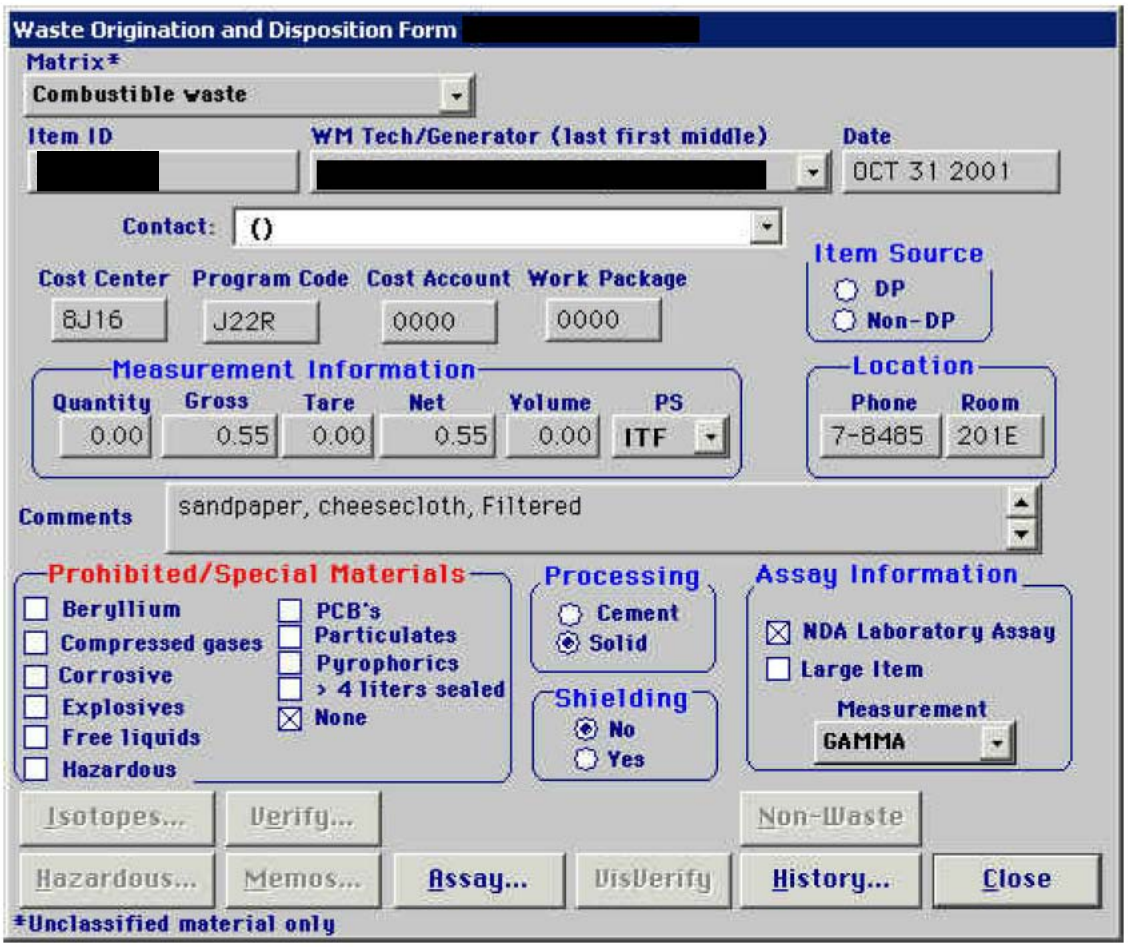

Figure 6. Example Generator Container Specific Documentation (Continued)

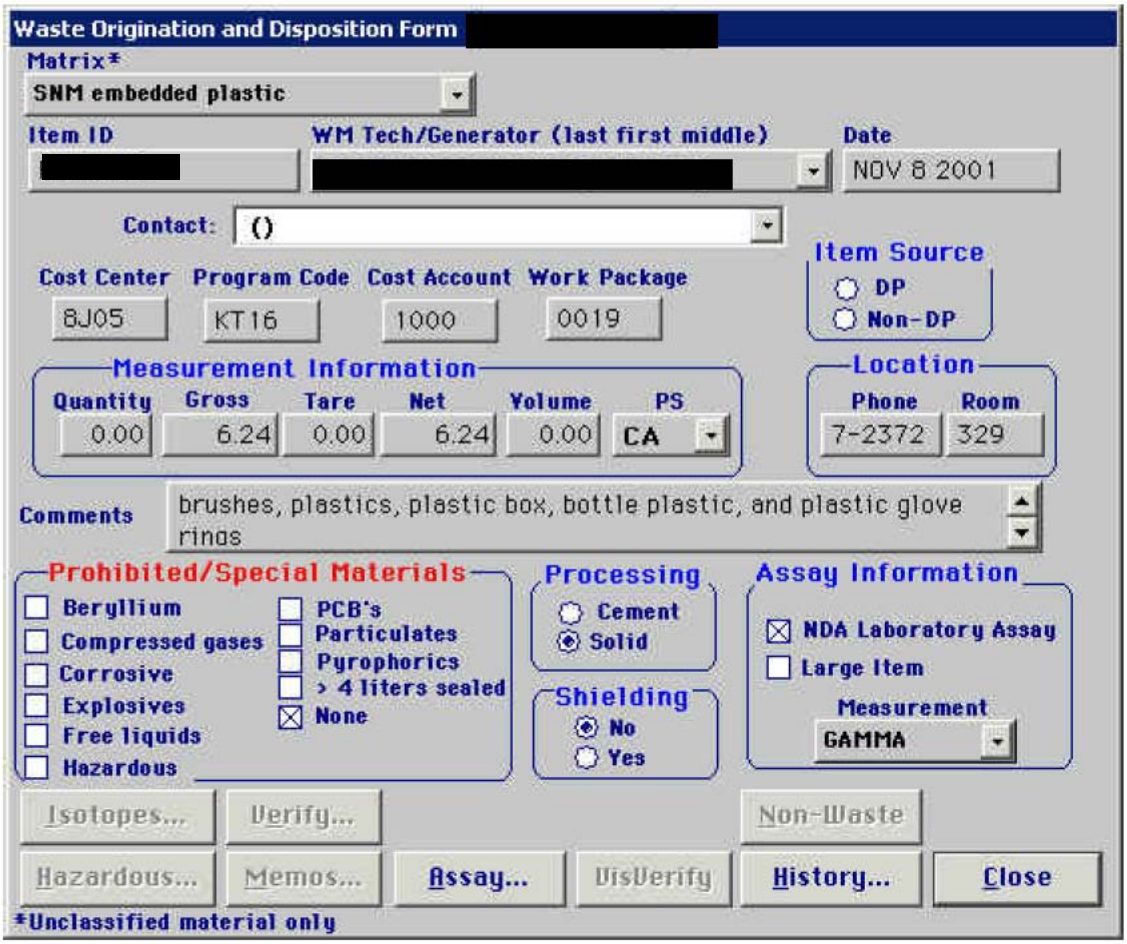

Figure 6. Example Generator Container Specific Documentation (Continued)

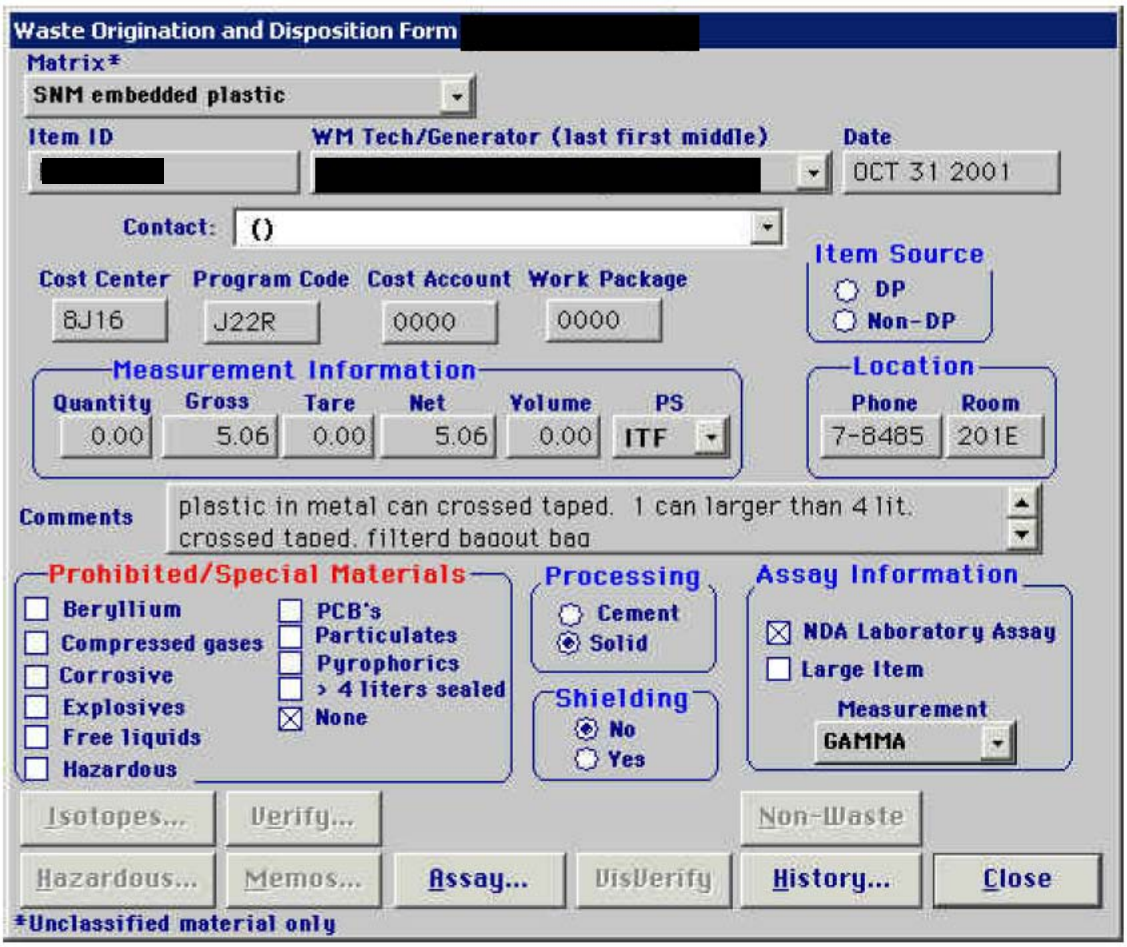

Figure 6. Example Generator Container Specific Documentation (Continued)

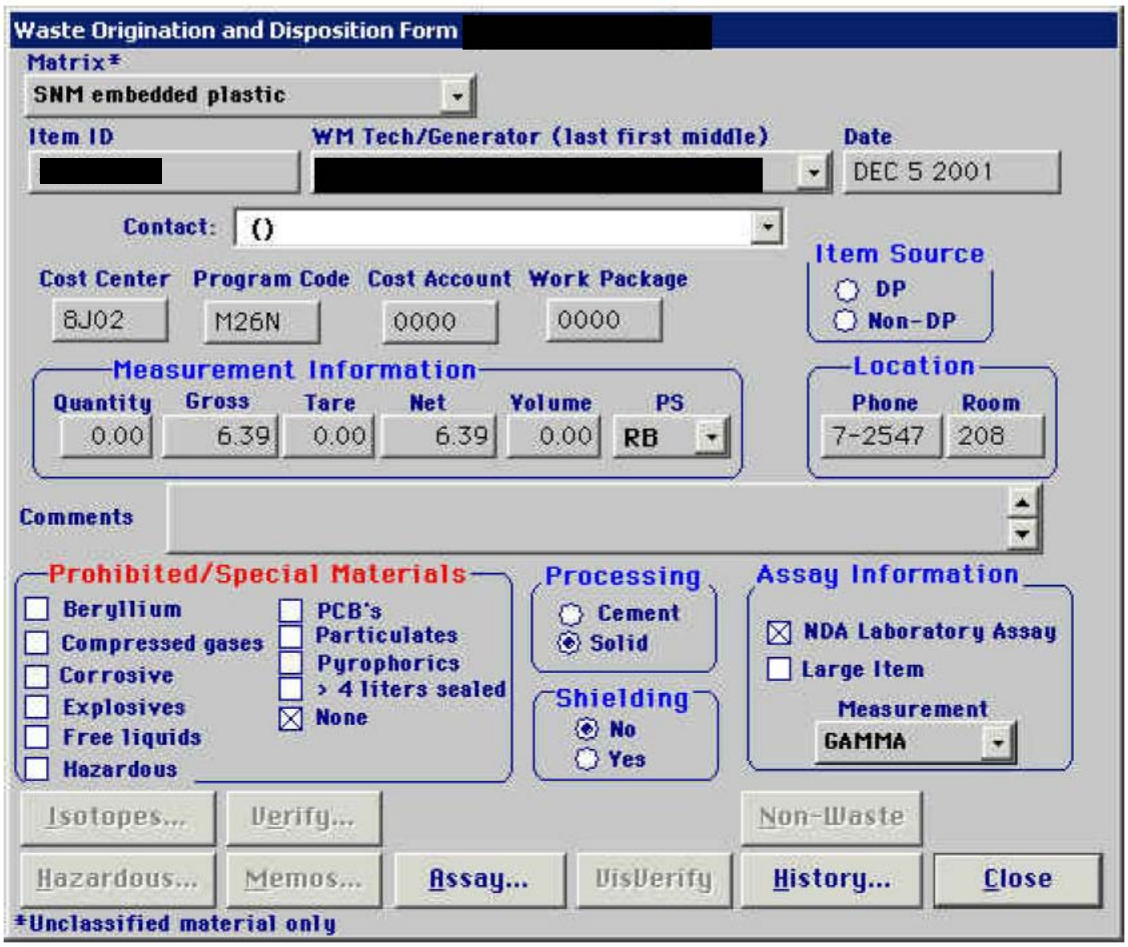

Figure 6. Example Generator Container Specific Documentation (Continued)

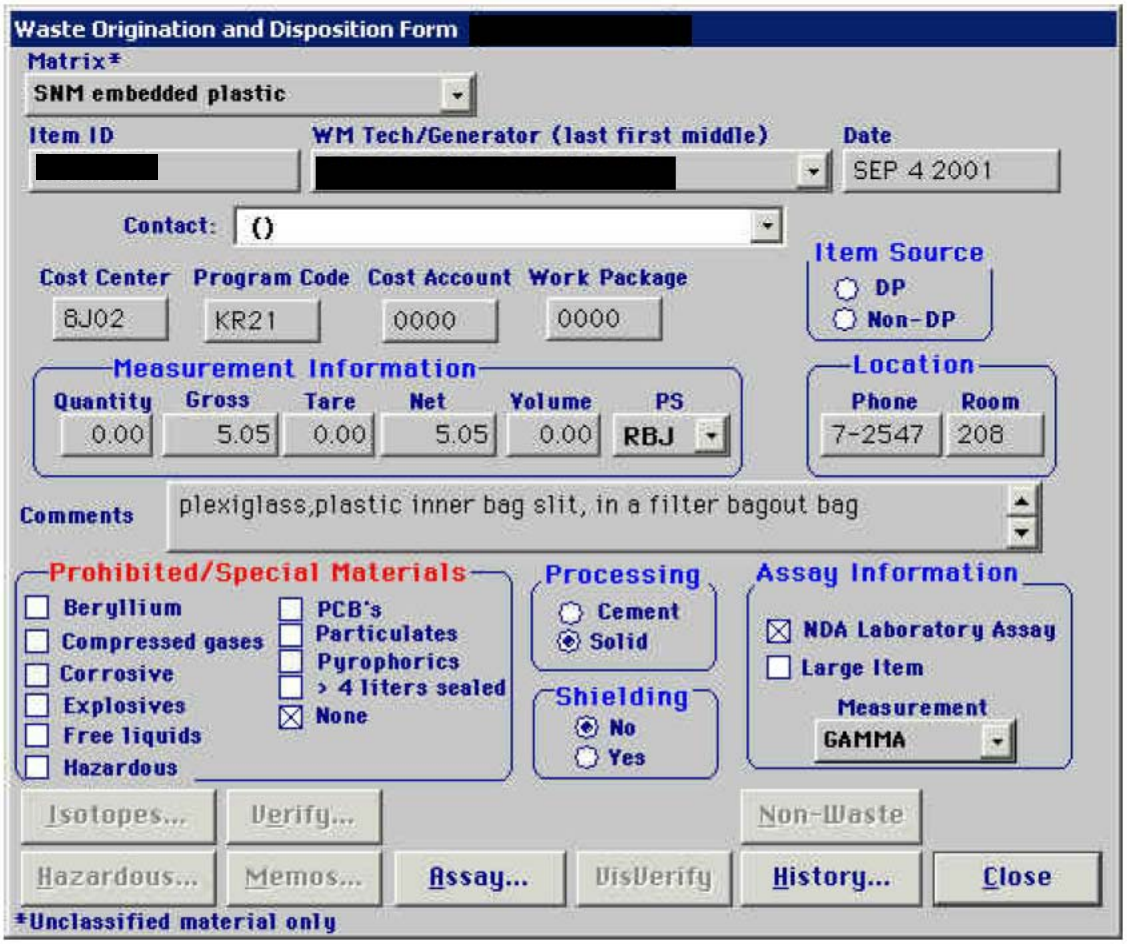

Figure 6. Example Generator Container Specific Documentation (Continued)

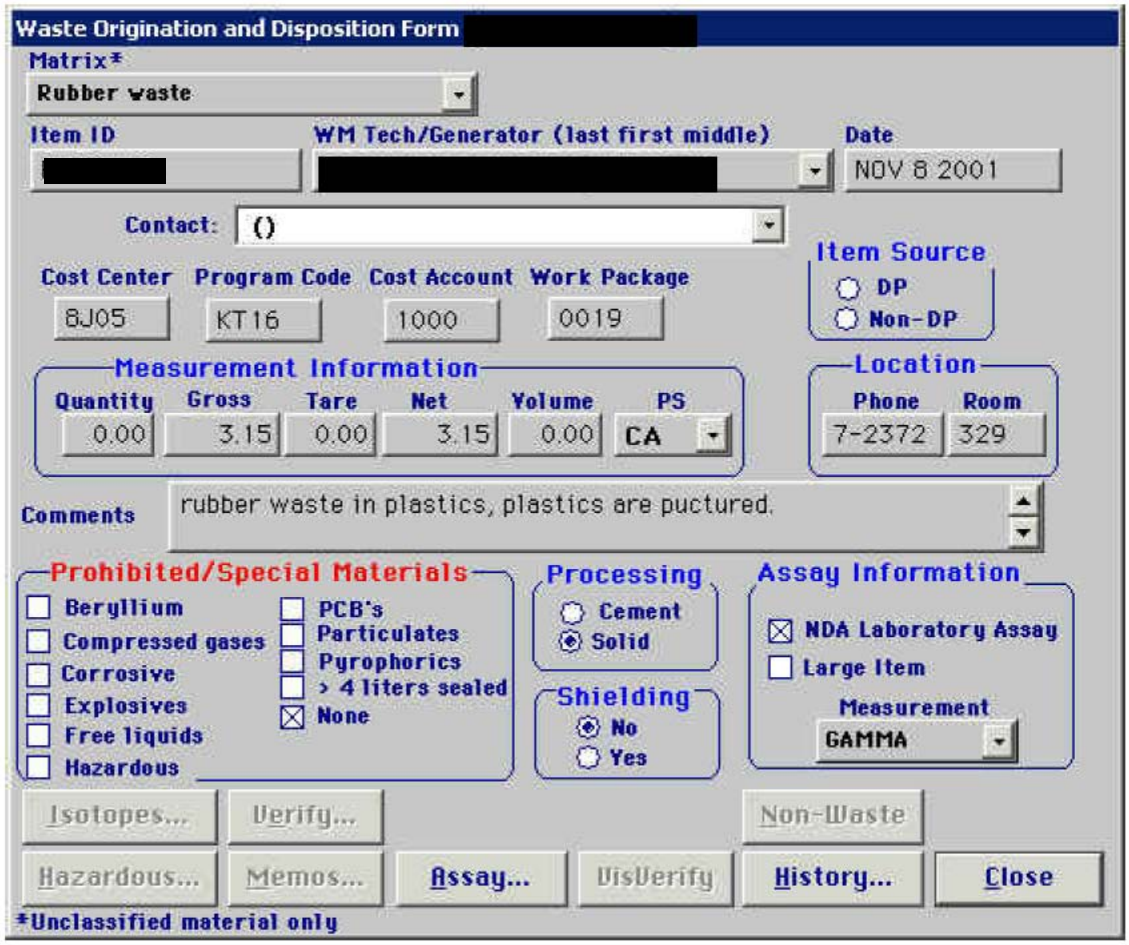

Figure 6. Example Generator Container Specific Documentation (Continued)

HEALTH-SAFETY-ENVIRONMENT FORM

LOS ALAMOS SCIENTIFIC LABORATORY

DATE

CHEMICAL WASTE DISPOSAL REQUEST

REQUESTED BY _____ PHONE _____

GROUP _____ LOCATION: TA-_____ BLDG. _____ AREA/WING _____ ROOM _____

WASTE VOLUME (ft^3) _____

NUMBER OF CONTAINERS (SIZE/TYPE) _____

WASTE FORM (check as appropriate):

☐ SOLID ☐ LIQUID ☐ GAS

COMMON NAMES OF CHEMICALS: _____

POTENTIAL HAZARDS (check as appropriate):

CORROSIVES ☐ Acids ____strong ____mild ____weak

☐ Bases ____strong ____mild ____weak

☐ FLAMMABLE ☐ TOXIC ☐ OTHER:

☐ EXPLOSIVE ☐ CARCINOGEN _____

☐ PYROPHORIC ☐ INFECTIOUS _____

☐ OIL ☐ UNKNOWN _____

CAN MATERIALS REACT VIOLENTLY WHEN EXPOSED TO:

AIR _____ WATER _____ OTHER CHEMICALS _____

If yes, give details: _____

OTHER USEFUL INFORMATION: _____

(TO BE COMPLETED BY H-7)

DISPOSAL RECORD

AREA _____ PIT/SHAFT _____ DATE _____ BY _____

MAIL THIS FORM TO WASTE MANAGEMENT, H-7, MS-~~[illegible]~~ 516

6/80 HS&E 7-5A

Figure 7. Process Flow Diagram for Nitrate Operations (Legacy)

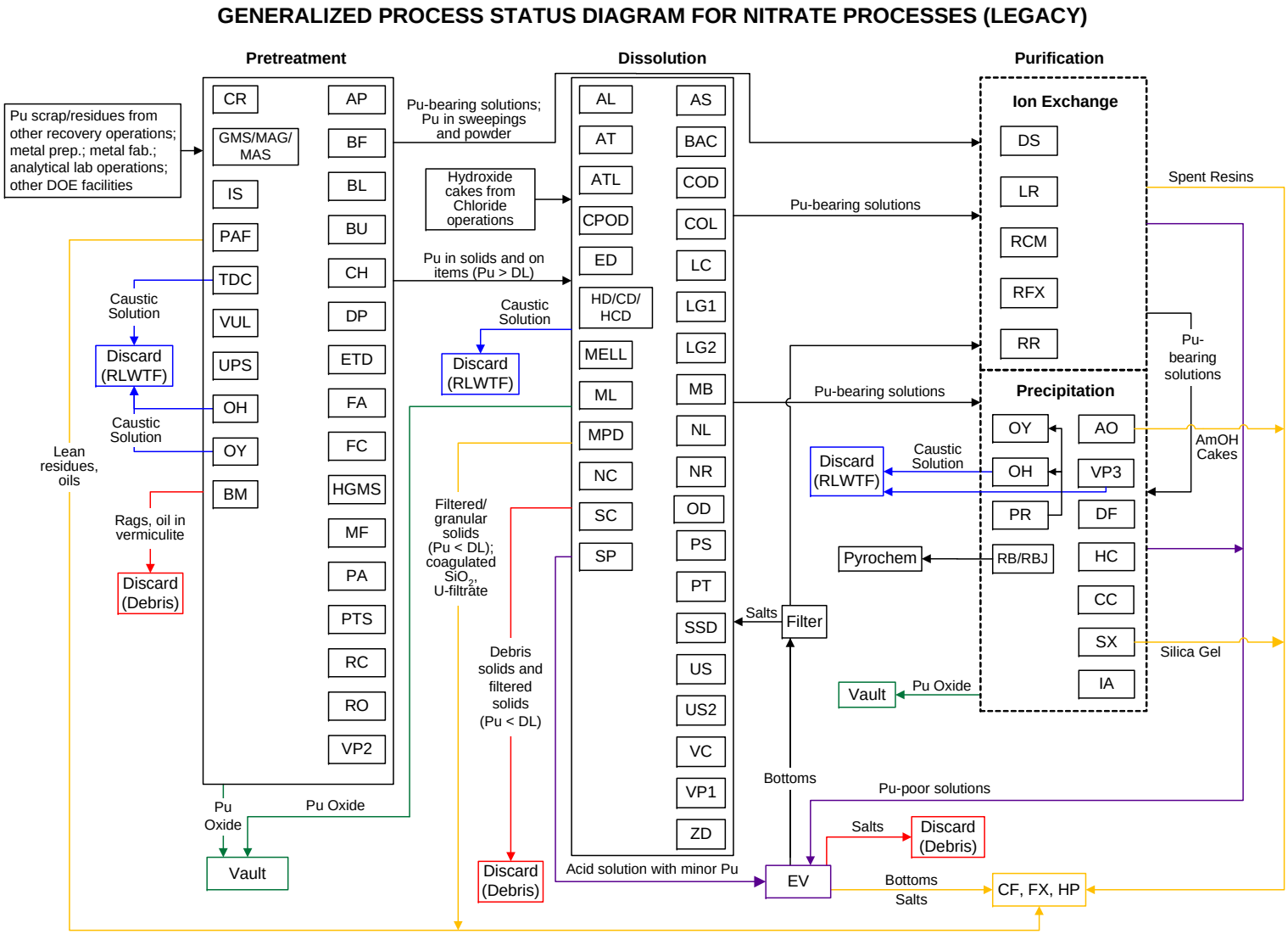

Figure 8. Process Flow Diagram for Nitrate Operations (Newly Generated)

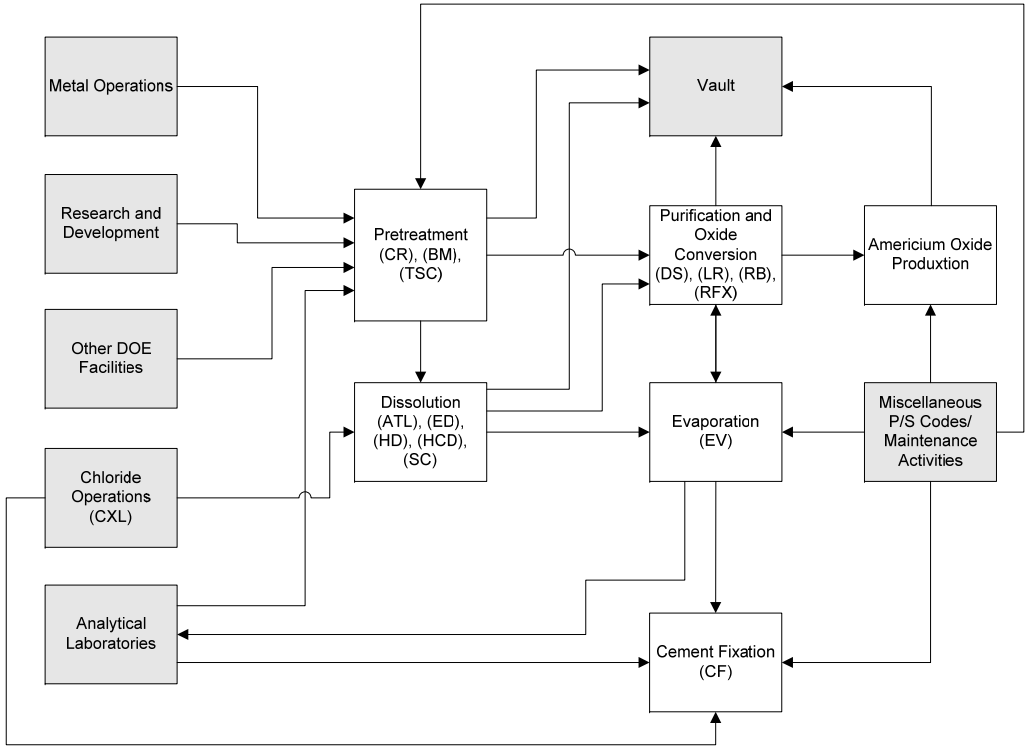

Nitrate Processing Flow Diagram

Figure 9. Simplified Process Flow Diagram for Miscellaneous Operations (Legacy)

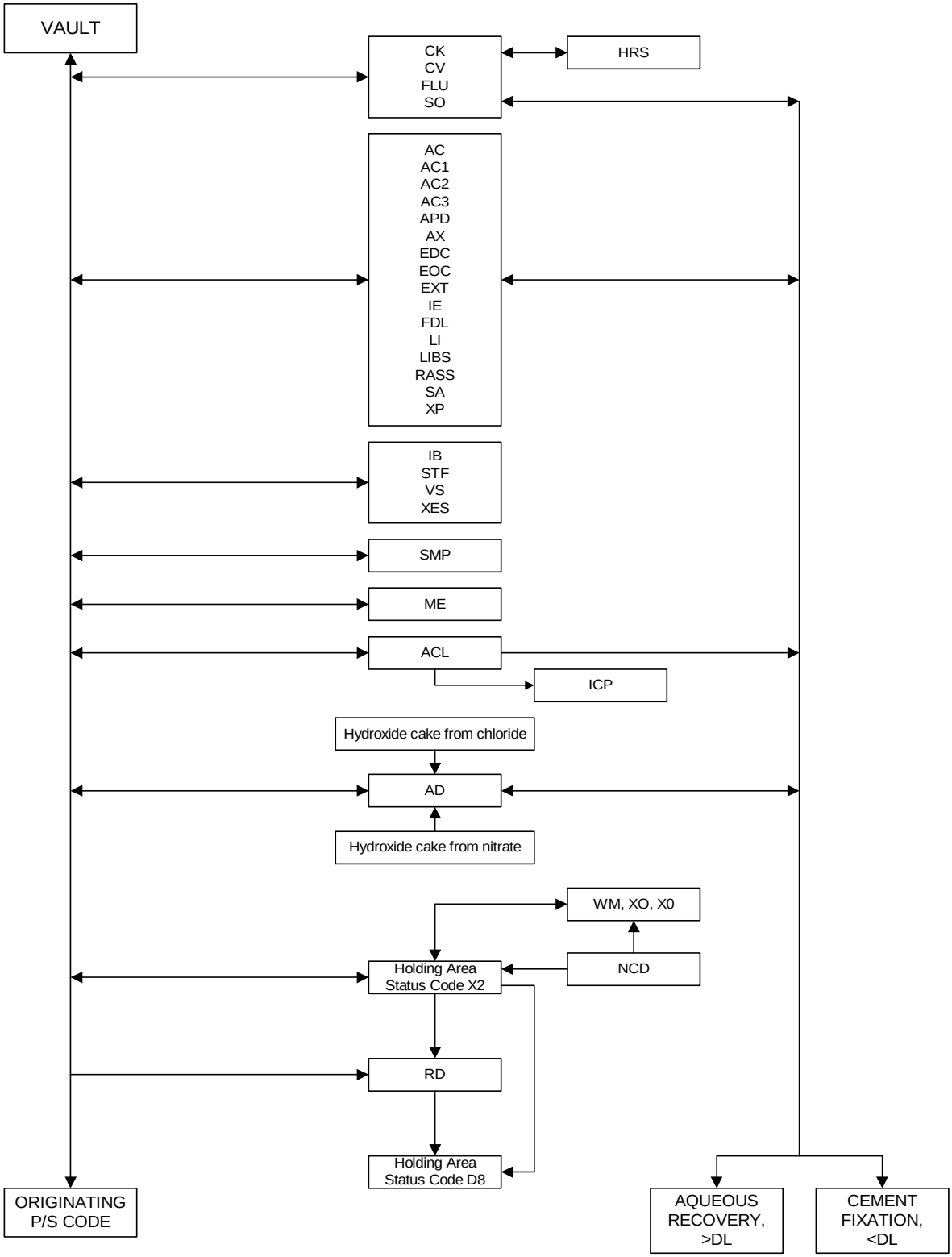

Figure 10. Simplified Process Flow Diagram for Miscellaneous Operations (Newly Generated)

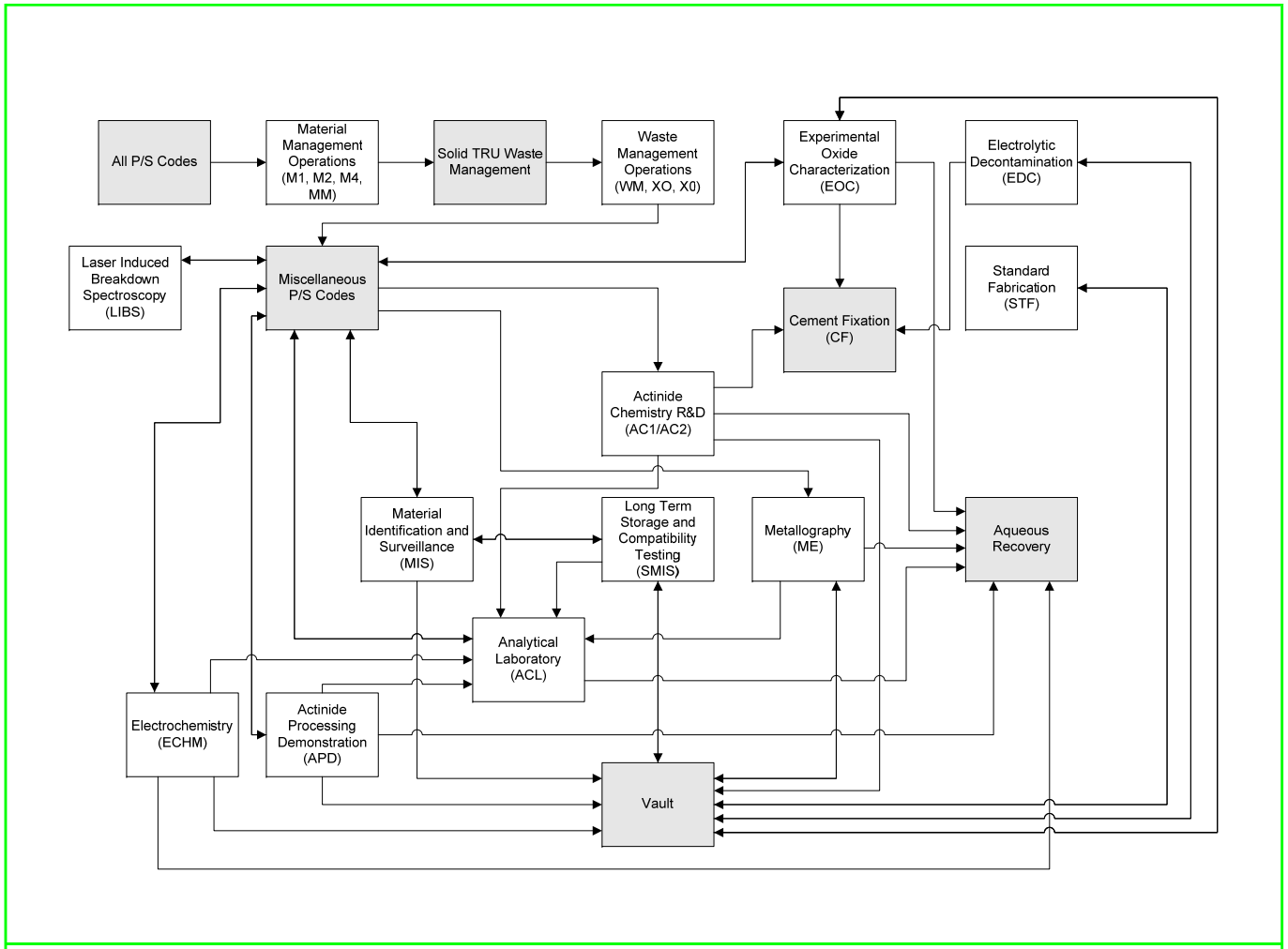

Miscellaneous Operations Flow Diagram

Figure 11. Simplified Process Flow Diagram for Special Processing (Legacy)

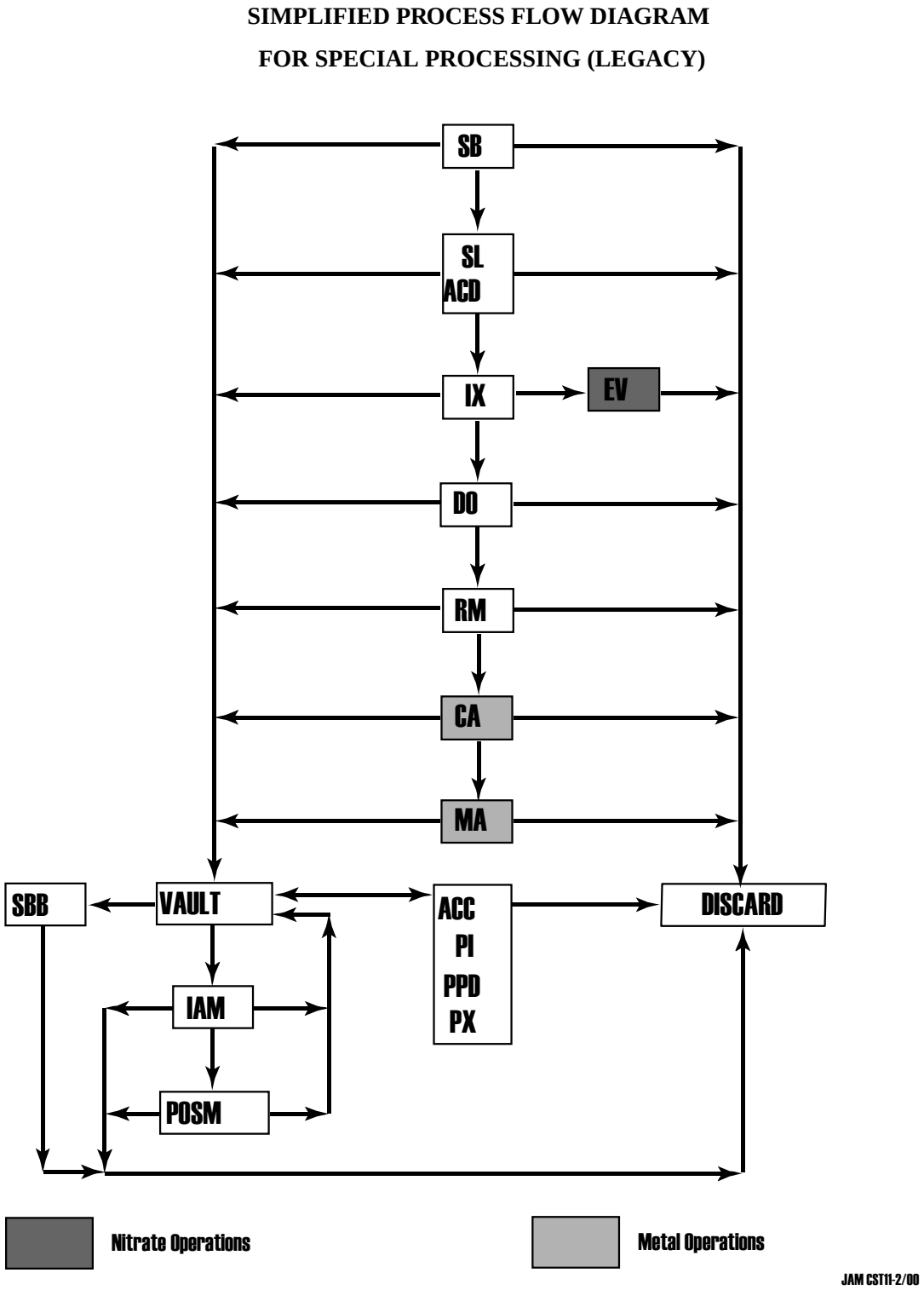

Figure 12. Simplified Process Flow Diagram for Special Operations (Newly Generated)

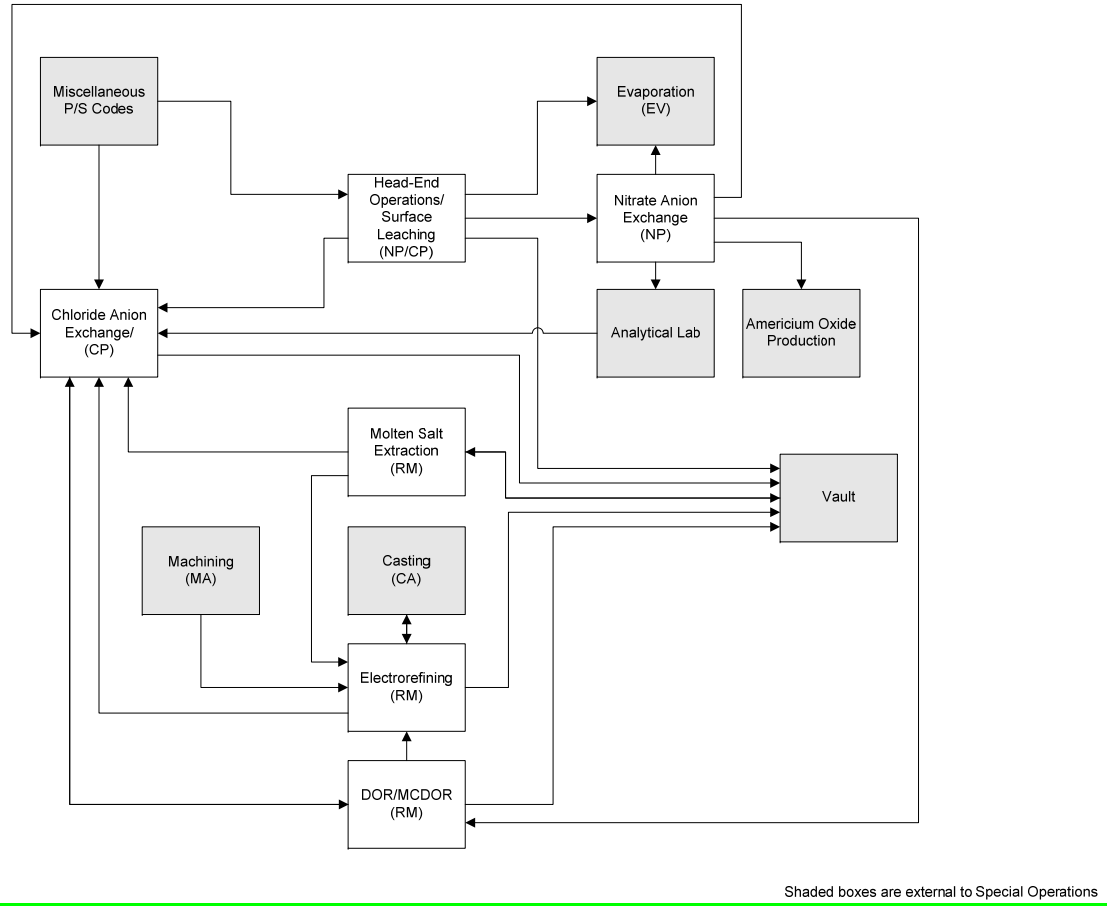

Special Operations Flow Diagram

Figure 13. Simplified Process Flow Diagram for Metal Operations (Legacy)

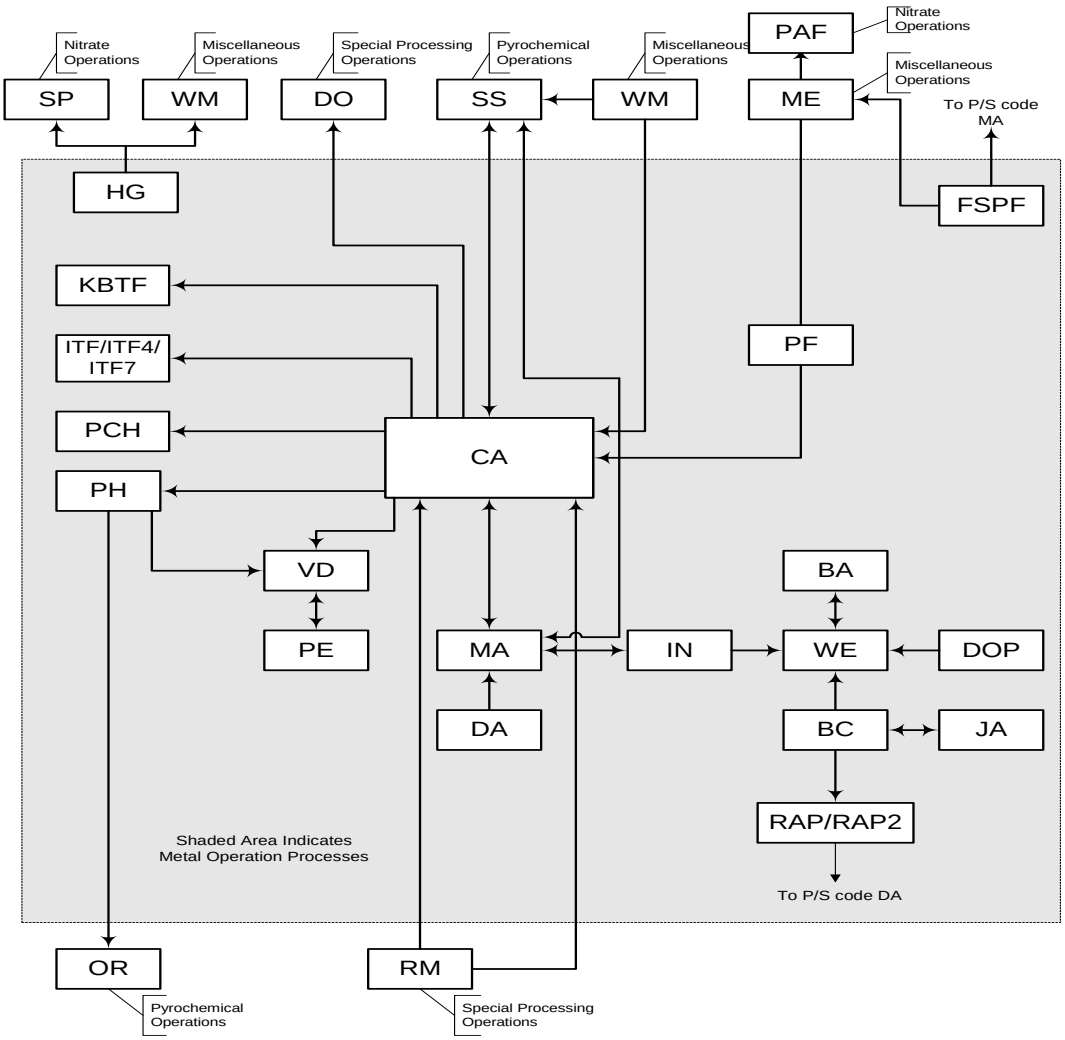

NOTE: All of these P/S codes may obtain feed material from or send product output to the vault.

Figure 13. Simplified Process Flow Diagram for Metal Operations (Legacy) (Continued)

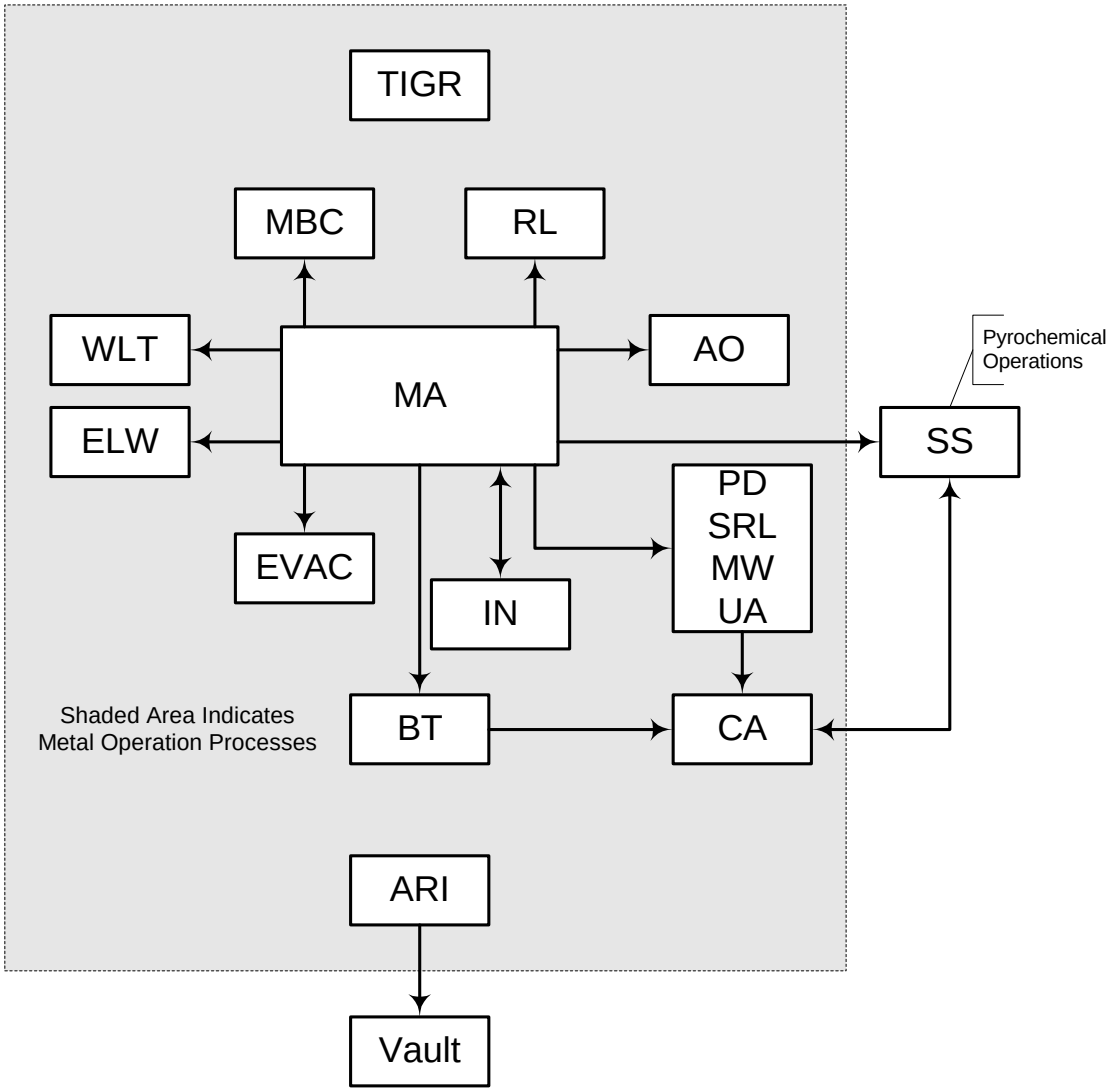

NOTE: All of these P/S codes may obtain feed material from or send product output to the vault.

NOTE: P/S code UA tracks uranium compounds from Pit Disassembly. Activities under this P/S code would be similar to those under P/S codes IN, MW, and WE.

Figure 13. Simplified Process Flow Diagram for Metal Operations (Legacy) (Continued)

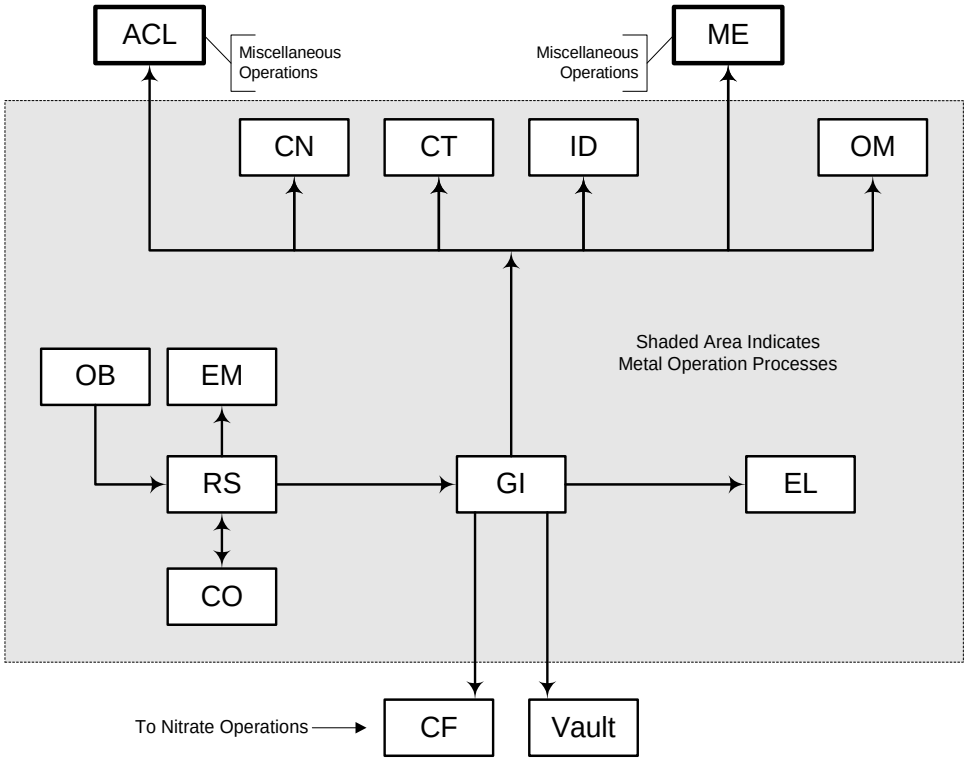

In 1988, P/S codes CO, GI, ID, OB, and RS were combined into P/S code FF. P/S codes CT, ID, and OM are status codes only, and probably do not generate TRU waste.

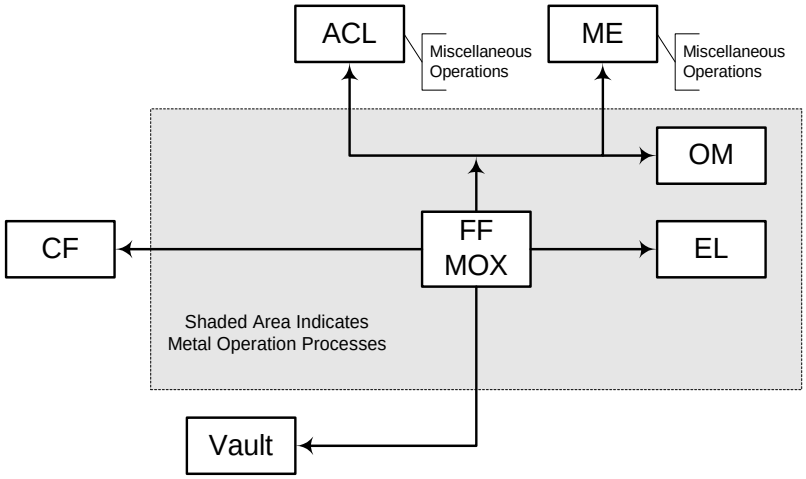

NOTE: All of these P/S codes may obtain feed material from or send product output to the vault.

Figure 14. Simplified Process Flow Diagram for Metal Operations (Newly Generated)

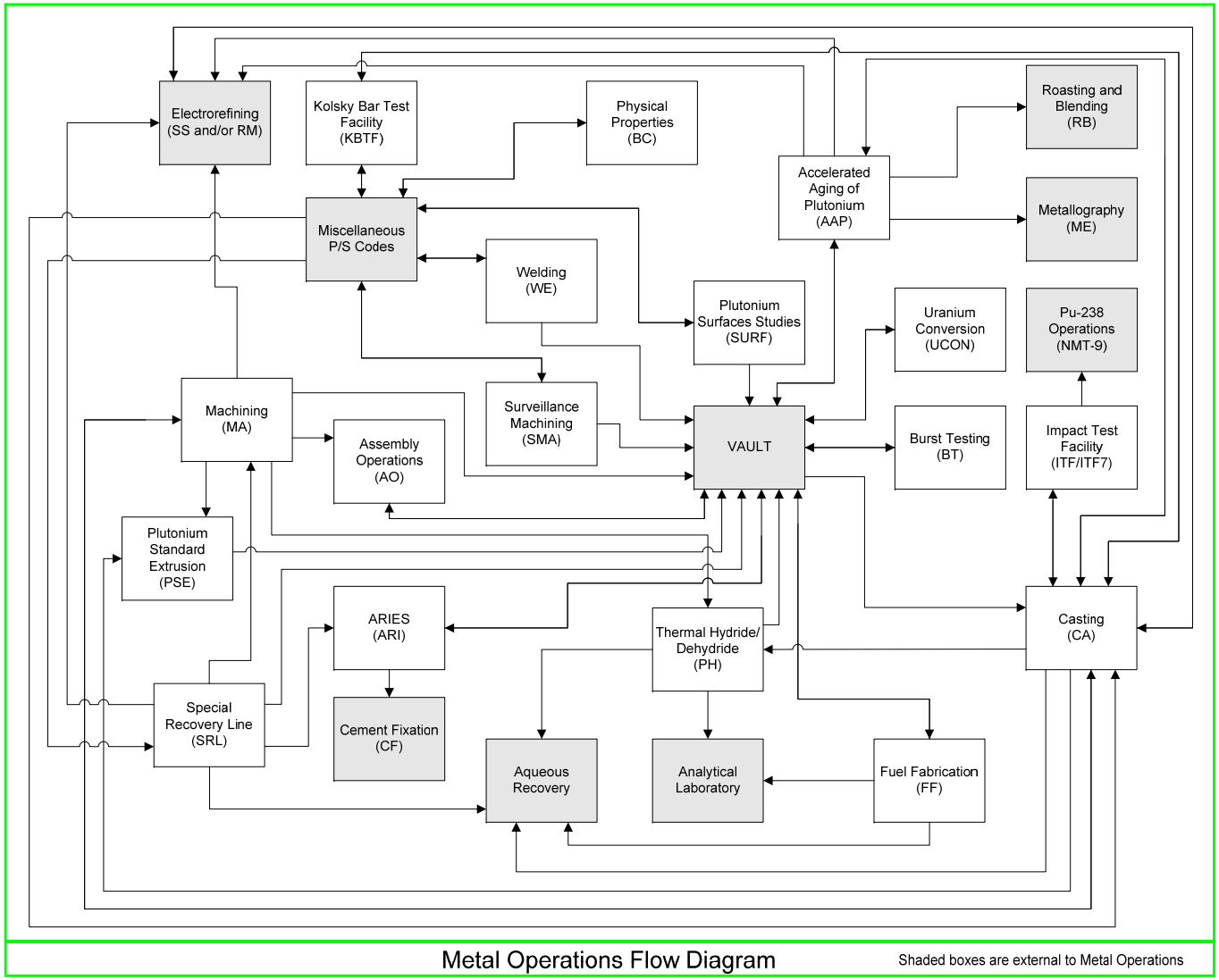

Figure 15. Simplified Process Flow Diagram for Pyrochemical Operations (Legacy)

**SIMPLIFIED PROCESS FLOW DIAGRAM
FOR PYROCHEMICAL PROCESSES
(LEGACY)**

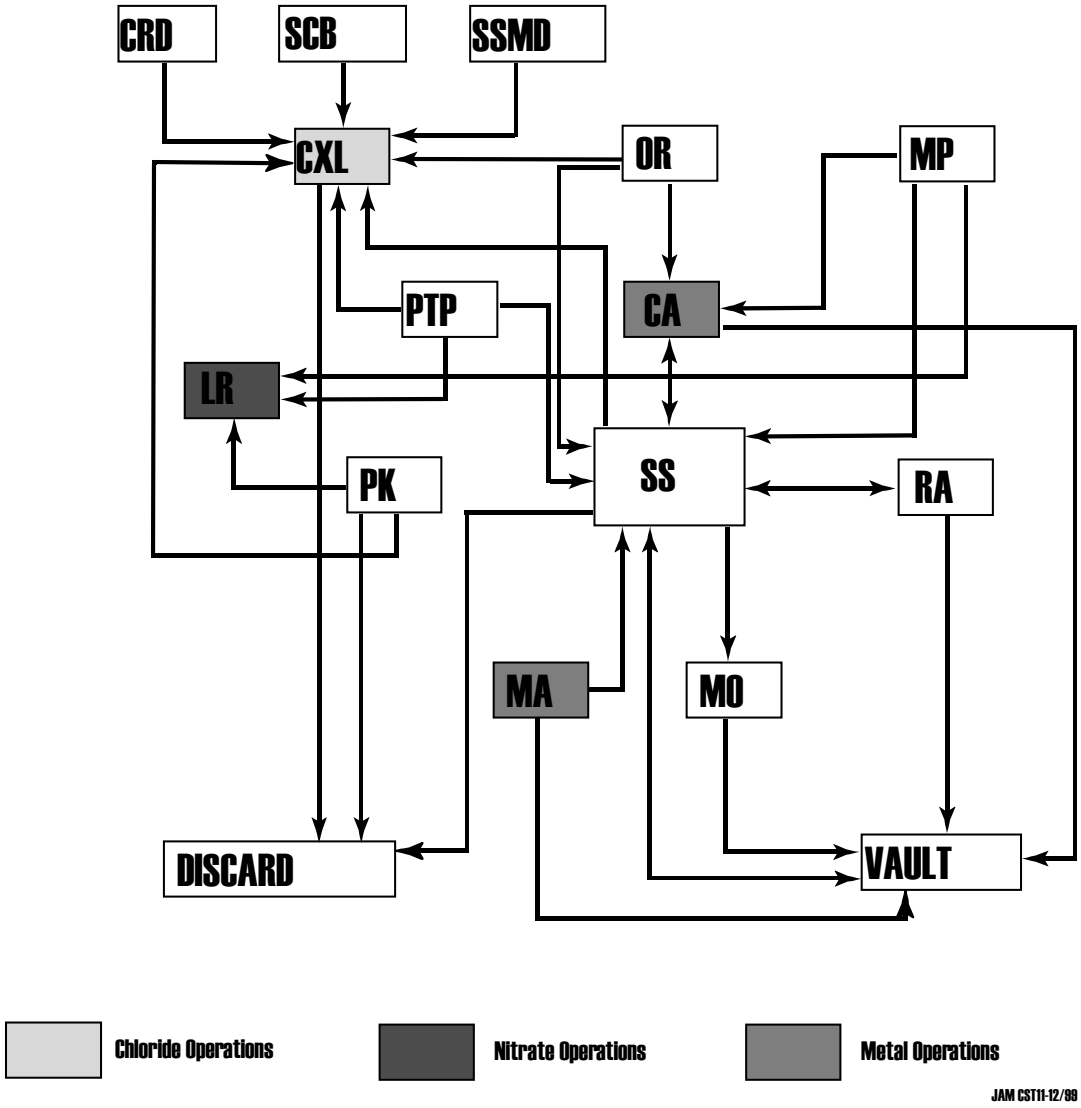

Figure 16. Simplified Process Flow Diagram for Chloride Operations (Legacy)

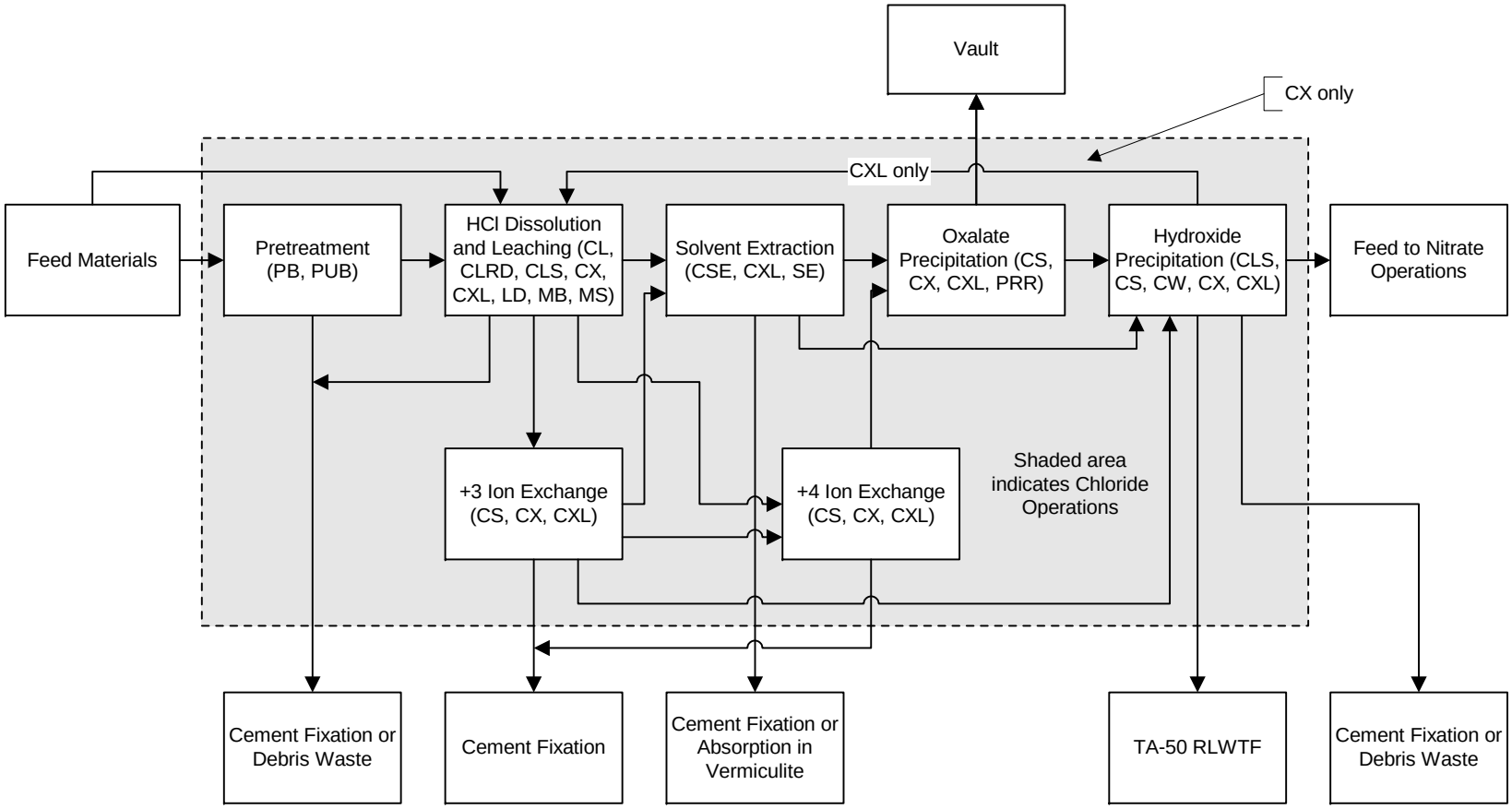

NOTE: Many of the P/S Codes for chloride operations involve more than one step or activity in the flow diagram. Thus, the same P/S Code can appear in more than one box on the flow diagram.

Figure 17. Simplified Process Flow Diagram for Pyrochemical and Chloride Operations (Newly Generated)

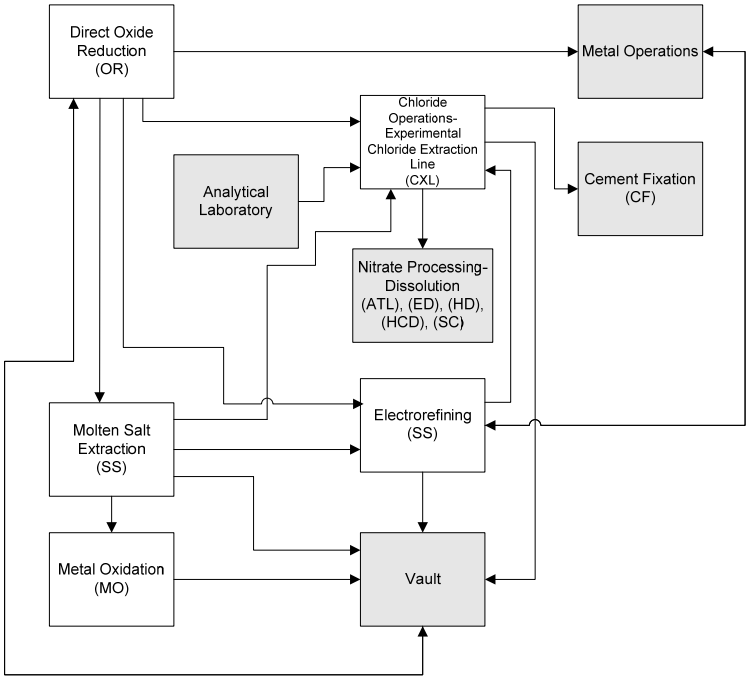

Pyrochemical/Chloride Processing Flow Diagram

Figure 18. Simplified Process Flow Diagram for Pu-238 Operations (Legacy)

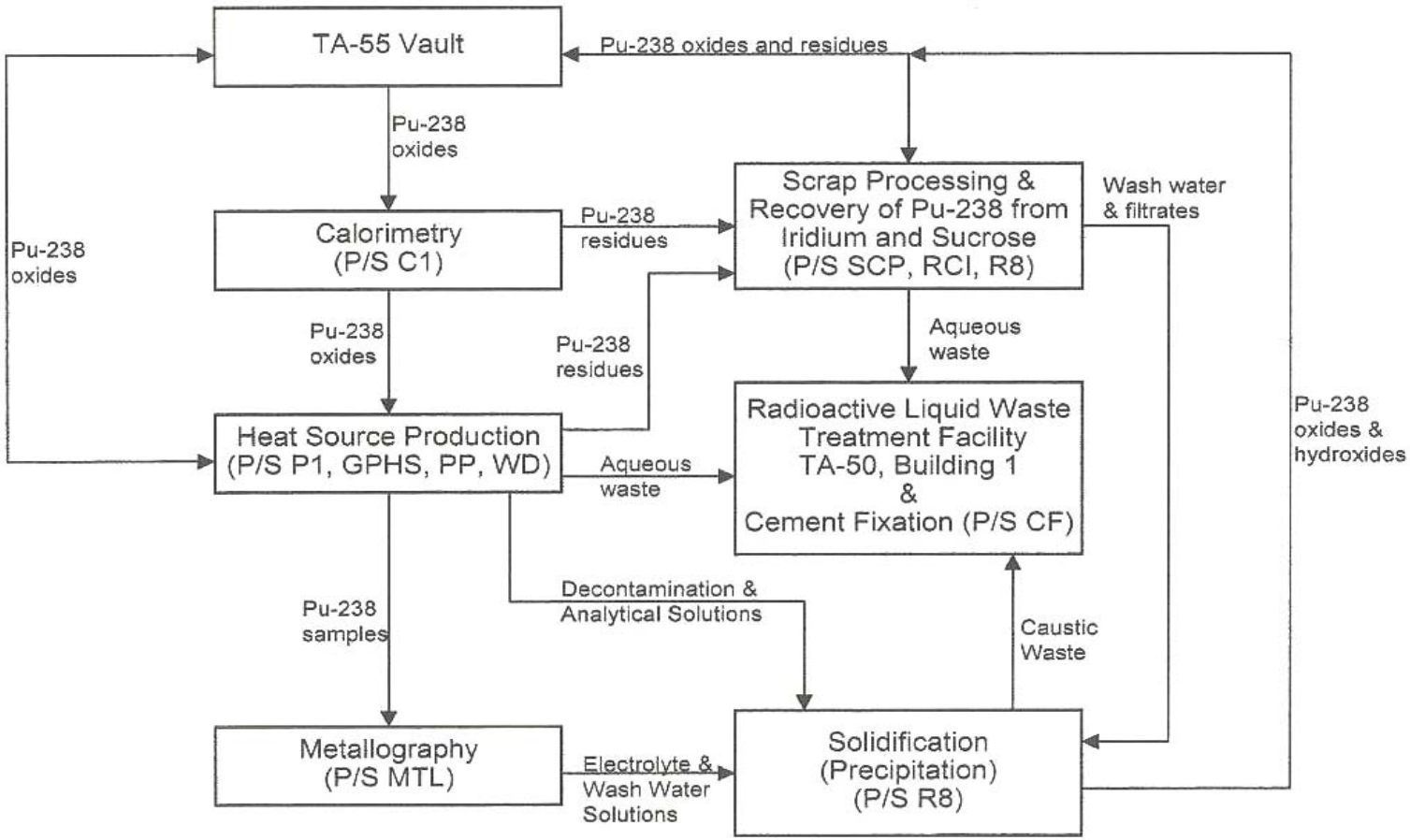

Figure 18. Simplified Process Flow Diagram for Pu-238 Operations (Legacy) (Continued)

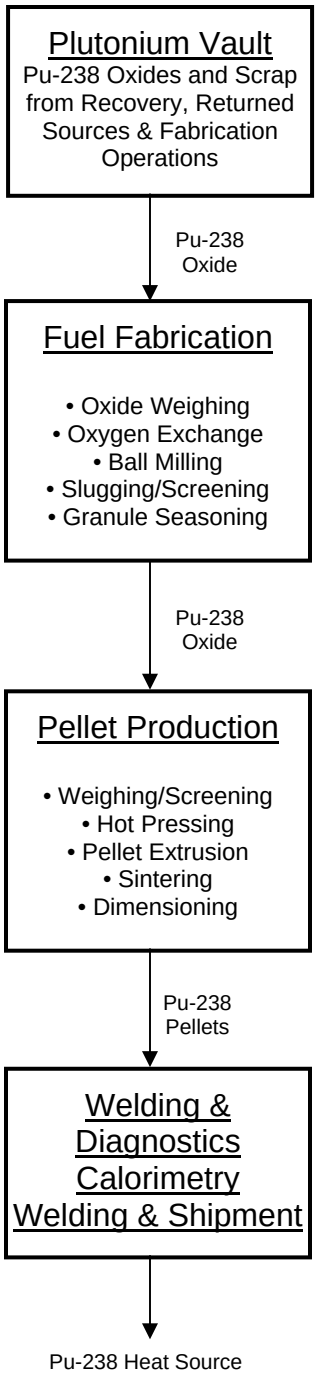

Figure 18. Simplified Process Flow Diagram for Pu-238 Operations (Legacy) (Continued)

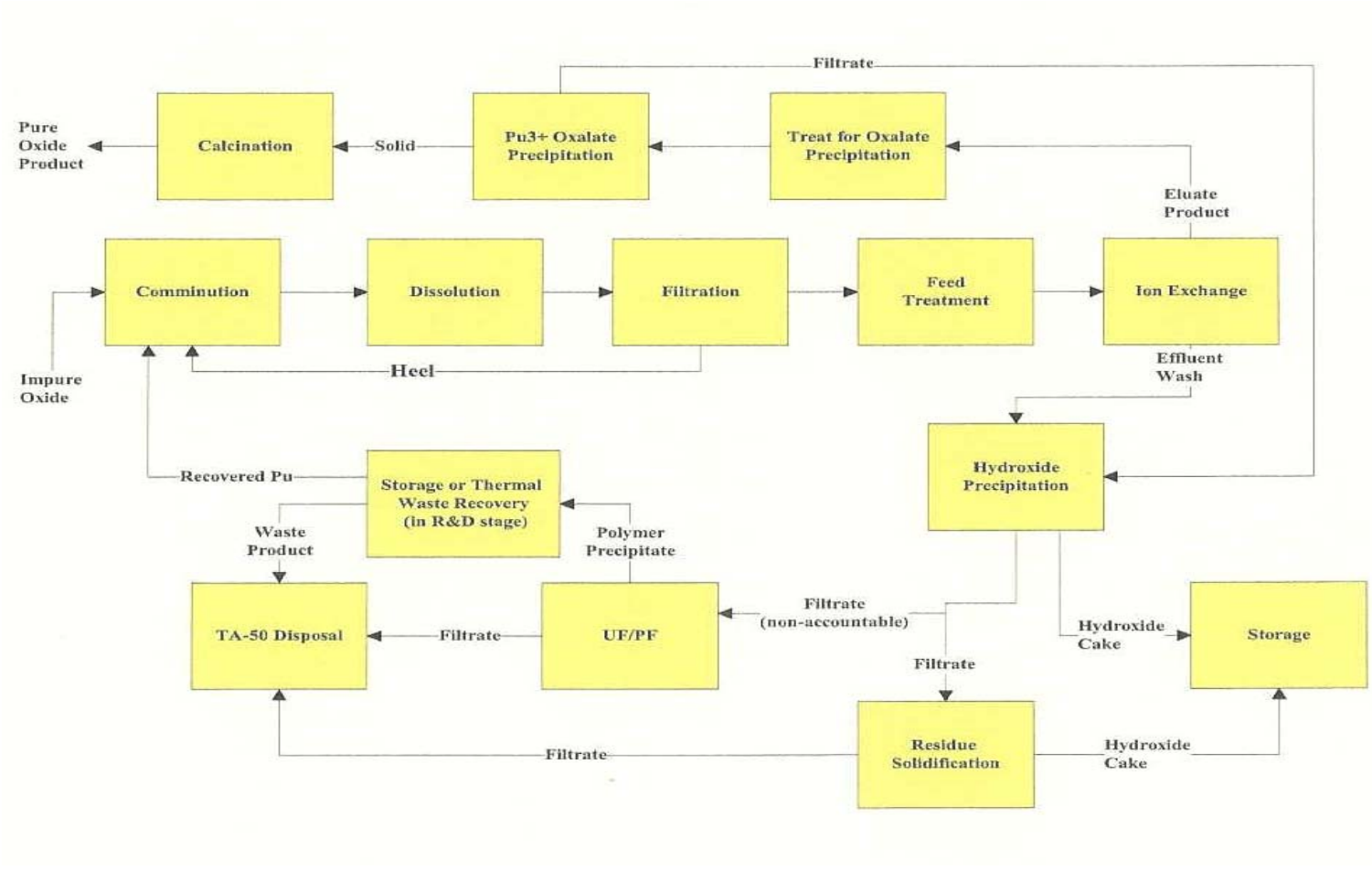

Figure 19. Simplified Process Flow Diagram for Pu-238 Operations (Newly Generated)

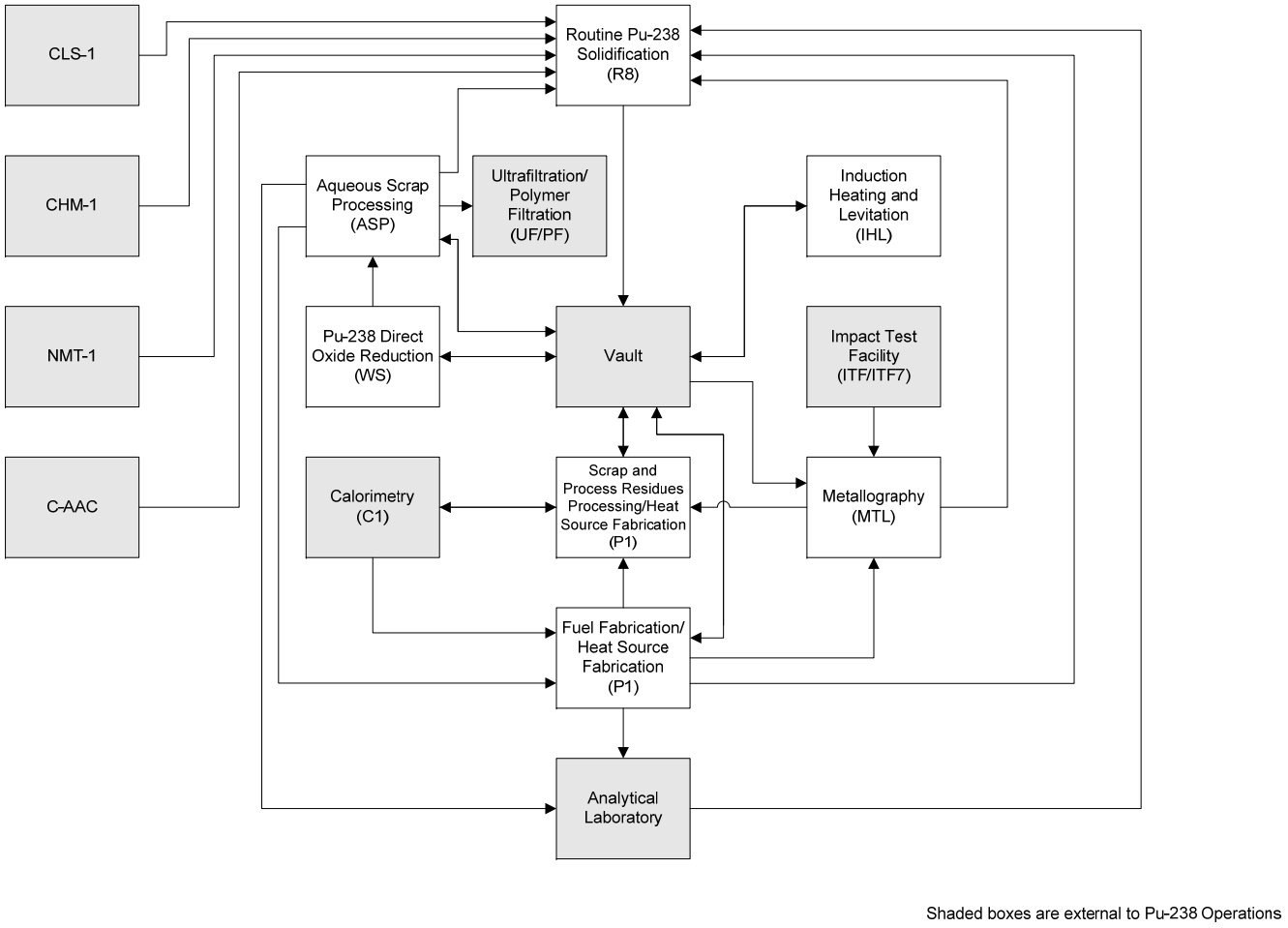

Pu-238 Operations Flow Diagram

Figure 20. Waste Repackaging and Prohibited Item Disposition Flow Diagram

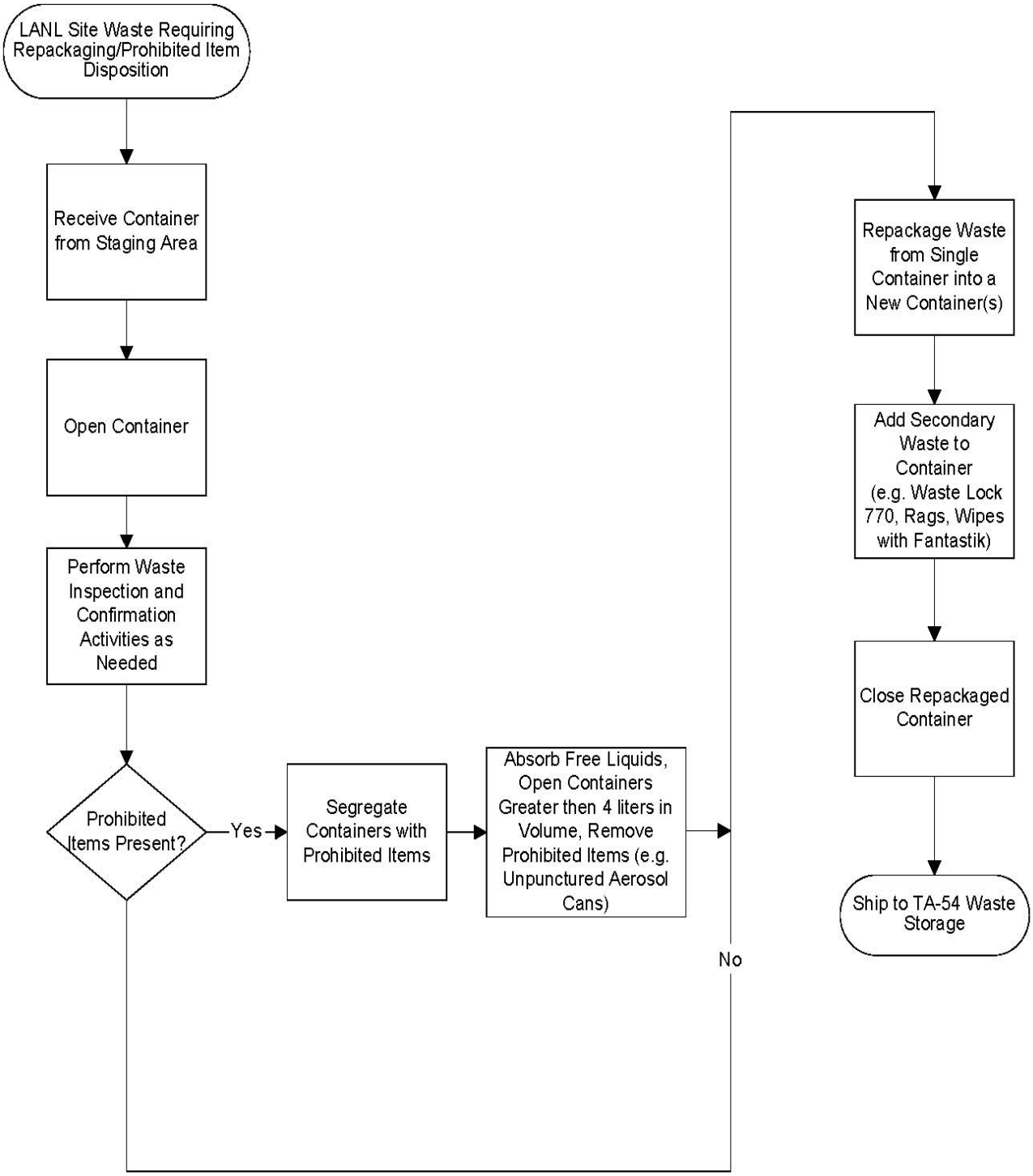

Figure 21. Below-Grade Drum Retrieval Flow Diagram

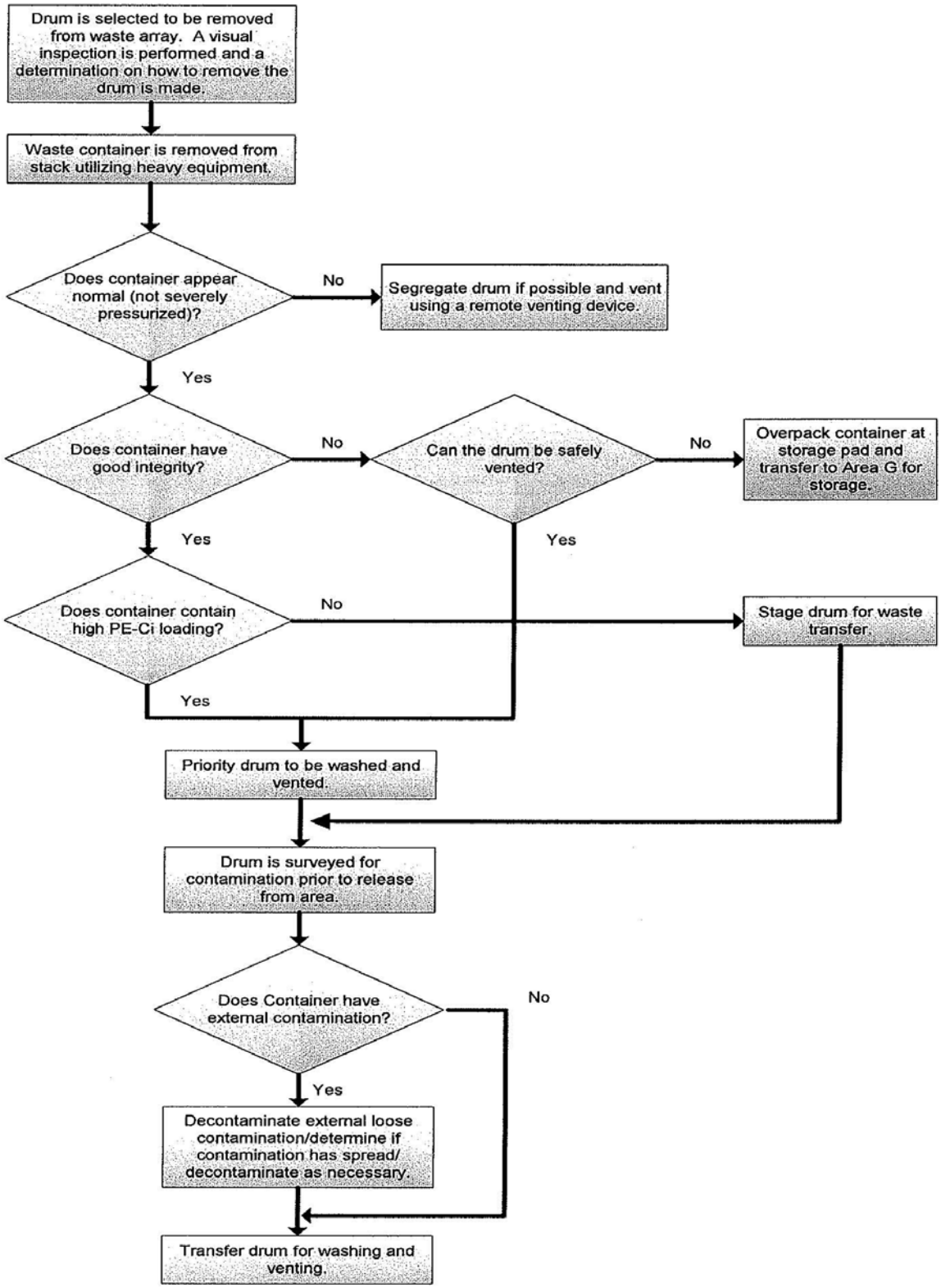
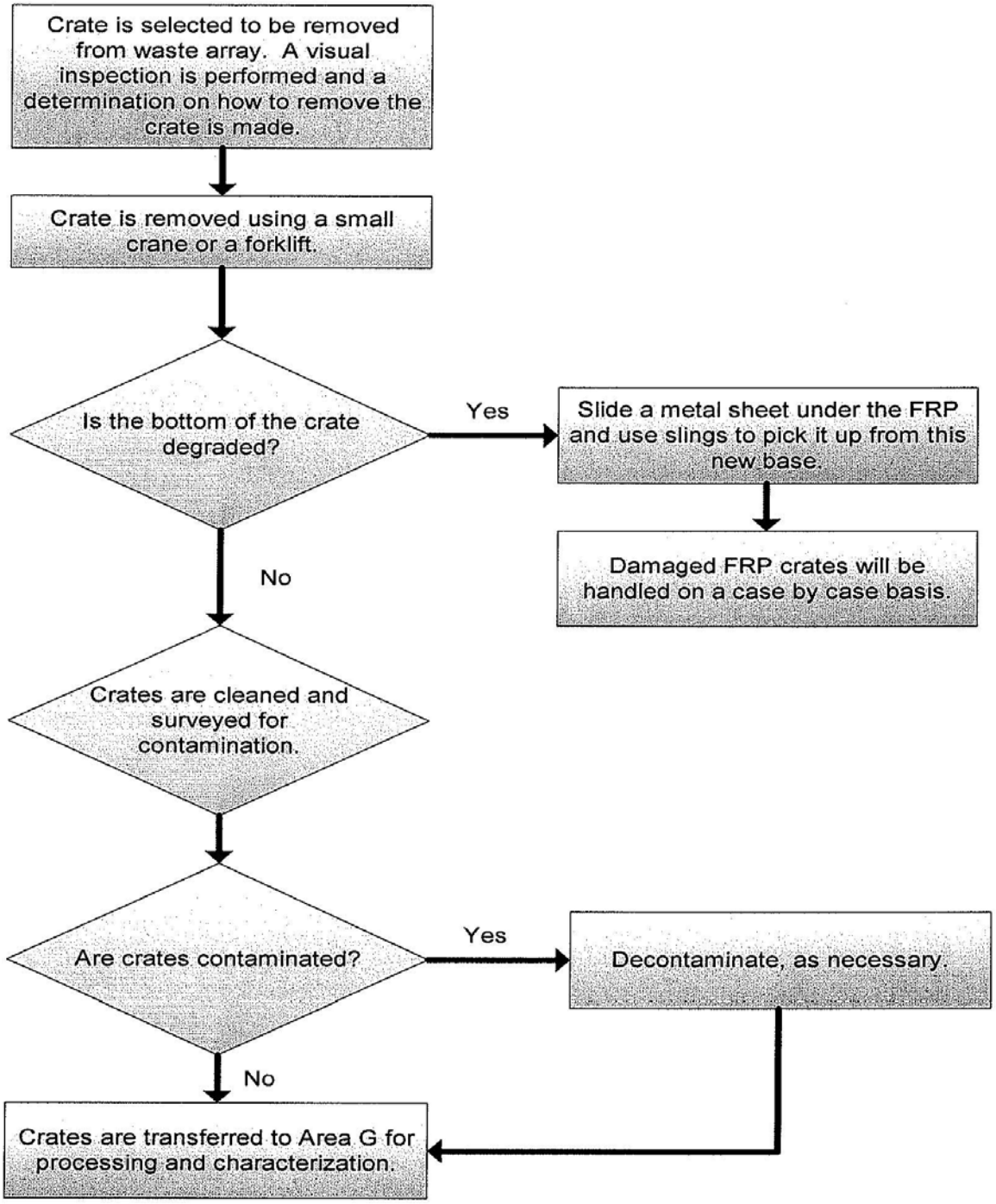
Figure 22. Below-Grade Crate Retrieval Flow Diagram