Colleagues,

Attached is a recent paper urging serious consideration of alternatives to electricity for gathering, transmission, firming storage, and end-use of renewables, as "firm" and "dispatchable" energy, as we move quickly but prudently to "run the world on renewables" -- plus some degree of nuclear.

Also attached is the poster of a paper presented at World Energy Congress, Sydney, AUS, Sept '04.

I have discussed these concepts with:

1. Dr. Majumdar, ARPA-E, in a brief July 10 meeting in Anchorage, AK. Our company has also submitted applications for funding via the "GRIDS" FOA.

2. Sen Murkowski and staff (McKie Campbell), as recently as February and April 11

These alternatives deserve and require more serious attention than my colleagues and I can give them. I cannot claim that either will play an important role in humanity's sustainable energy future, but they might. Therefore, I recommend investigation in R&D and Demonstration projects to discover and demonstrate their technical and economic advantages vis-a-vis electricity -- if any.

Iowa State Univ has convened seven annual "Ammonia as Fuel" conferences:
http://www.energy.iastate.edu/renewable/ammonia/ammonia.htm

Both hydrogen and ammonia present problems and dangers for enabling humanity's ultimate objective of "running the world on renewables". All fuels are dangerous; each must be properly respected, with infrastructure optimized for safety and economy.

You will find more of our co-authored work at www.leightyfoundation.org/earth.php, and a panel presentation on the larger picture at:

http://www.youtube.com/watch?v=ioJi07rbWLo

http://itunes.apple.com/us/podcast/class-of-1965-panel/id385582534?i=88769791
Use the timeline scroll bar to 23:30 min for Bill Leighty's 15 min presentation.
Bill's intro presentation (15 min) PowerPoint file, as a .pdf, is at:
http://www.leightyfoundation.org/files/Stanford_Panel_22_Oct_10.pdf

Thank you for your consideration.

Bill Leighty
Director, The Leighty Foundation (TLF)
Principal, Alaska Applied Sciences, Inc. (AASI)
Box 20993, Juneau, AK 99802-0993

907-586-1426 FAX -1423
Cell 206-719-5554
www.leightyfoundation.org/earth.php

POWER2011-55267

Beyond Smart Grid: Alternatives for Transmission and Low-cost Firming Storage of Stranded Renewables as Hydrogen and Ammonia Fuels via Underground Pipelines

William C. Leighty
The Leighty Foundation, Juneau, AK, USA

John H. Holbrook
Ammpower LLC, Richland, WA, USA

ABSTRACT

We must soon "run the world on renewables" but cannot, and should not try to, accomplish this entirely with electricity transmission. We need to supply all energy, not just electricity, from diverse renewable energy (RE) resources, both distributed and centralized, where the world's richest RE resources – of large geographic extent and high intensity – are stranded: far from end-users with inadequate or nonexistent gathering and transmission systems to deliver the energy. Electricity energy storage cannot affordably firm large, intermittent renewables at annual scale, while carbon-free gaseous hydrogen (GH2) and liquid anhydrous ammonia (NH_3) fuels can: GH2 in large solution-mined salt caverns, NH_3 in surface tanks, both pressurized and refrigerated.

"Smart Grid" is emerging as primarily a DSM (demand side management) strategy to encourage energy conservation. Making the electricity grid "smarter" does not:
1. Increase physical transmission capacity;
2. Provide affordable annual-scale firming storage for RE;
3. Solve grid integration problem for large, time-varying RE;
4. Alleviate NIMBY objections to new transmission siting;
5. Reduce the high O&M costs of overhead electric lines.

The "smarter" grid may be more vulnerable to cyberattack. Adding storage, control, and quality adjunct devices to the electricity grid, to accommodate very high renewables content, may be technically and economically inferior to GH2 and NH_3 RE systems. Thus, we need to look beyond "smart grid", expanding our concept of "transmission", to synergistically and simultaneously solve the transmission, firming storage, and RE integration "balancing" problems now severely constraining our progress toward "running the world on renewables".

Index Terms — Ammonia, hydrogen, cavern, firm, fuel, packing, pipeline, renewable, storage, stranded, tank, transmission, smart grid

INTRODUCTION

Humanity must quickly convert our global energy system from fossil to primarily renewable energy (RE) sources. We will need more transmission and storage capacity than electricity can provide. This is "A clearly defined mission that is informed by, and linked to, a larger systems perspective", a "guiding principle" for "Transforming Energy Innovation" as proposed by Narayanamurti, Anadon, and Sagar. [1] Our investigation and planning must embrace complete RE systems, as envisioned by Ocean Energy Institute in Fig. 11.[2]

Thus, we need to now investigate and plan for a diversity of complementary RE transmission and storage systems: media, fuels, and strategies. Gaseous hydrogen (GH2) and anhydrous ammonia (NH_3) are especially attractive: Fig 1. Transmission pipelines for both have multi-GW capacity over hundreds of km and provide valuable inherent storage. Capital costs per GW-km and transmission losses and costs per GWh-km are comparable. Both can be storage at GWh-scale for capital costs of < $1.00 / kWh.

Jacobson and Delucci show that "…providing worldwide energy for all purposes (electric power, transportation, heating/cooling, etc.) from wind, water, and sunlight (WWS)" is technically and economically feasible. [3] They also survey many studies of the cost of electricity transmission systems, showing that the capital cost is about $400 – 600 / MW-km. They also discuss the ratio of MW_{WC} (i.e. Wind Capacity) to MW_{TS} (i.e. Transmission System) ratings, recognizing that without affordable annual-scale energy storage, wind and other RE-electricity transmission systems will suffer either curtailment of production during high-energy periods or the stranded capital asset of unused transmission capacity. GH2 and NH_3 RE systems help the MW_{WC} / MW_{TS} problem.

At GW scale, renewable-source electricity from diverse sources can be converted to hydrogen and byproduct oxygen,

Copyright © 2011 by ASME

and/or to NH_3 fuels, both processes producing copious by-product oxygen, and pipelined underground to load centers for use as vehicle fuel and combined-heat-and-power generation on the wholesale or retail side of the customers' meters. The ICE, CT, and fuel cell operate very efficiently on GH2 and NH_3 fuels. USA has extensive extant NH_3 pipeline and tank storage infrastructure serving the N-fertilizer industry.

Both GH2 and NH_3 offer annual-scale-firming energy storage at low capital cost of < $1 / kWh, but with the added capital cost of, and energy loss in, the equipment required for conversion from RE-source electricity to GH2 and NH_3 fuels. If we are willing to accept those costs, to avail our future energy systems of the affordable storage necessary to "run the world on renewables", we should also solve the transmission and integration problems of high-penetration RE on the electricity grid: gather, transmit, and distribute time-varying-output RE via underground pipelines as carbon-free fuels for combined-heat-and-power (CHP) and transportation.

TRANSPORTATION ELECTRIFICATION

"Electrification of transportation is the only way we can prevent further global climate change and get off foreign oil." [4]

If "electrification" means that the vehicle wheels or the boat propeller is turned by an electric motor, via a power electronics control system, it does not mean that the electric energy necessarily come from on-board batteries. Both GH2 and NH_3 fuels can supply the electric energy via fuel cells, which may be a superior technical and economic strategy at continental scale whereby these RE-source fuels are widely distributed.

RE CHALLENGES AT LARGE SCALE

The energy output of most renewables varies greatly, at time scales of seconds to seasons: the energy capture assets thus operate at inherently low capacity factor (CF); energy delivery to end-users is not "firm". New electric transmission systems, or fractions thereof, dedicated to renewables, will suffer the same low CF, and represent substantial stranded capital assets, which increases the cost of delivered renewable-source energy.

We cannot achieve California AB32 and other ambitious greenhouse gas (GHG) emissions goals without fuel cell vehicles (FCV's) fueled with large quantities of zero-carbon-source GH2 fuel. GH2 pipelines may have a major role in humanity's energy future. Large-scale gathering, transmission, and distribution of RE-source GH2 fuel in pipelines would be a major new industrial process, for which a pilot plant is required, on the critical path to discovering and demonstrating feasibility. No GH2 pipelines for renewables-hydrogen service exist; the extensive extant industrial GH2 pipeline system is not capable of renewables-hydrogen service, over hundreds of km with large and frequent pressure fluctuation.

We report the results of several studies of the technical and economic feasibility of large-scale RE – hydrogen systems. [5, 6, 7, 8, 9, 10, 11] NH_3 is also an attractive transmission and storage medium, and strategy. Pressurized NH_3 storage and delivery infrastructure is very similar in design and performance to propane (LPG). The ICE, CT, and direct ammonia fuel cell operate very efficiently on NH_3 fuel. Energy, as liquid ammonia fuel, is stored inexpensively in 10-30,000 ton refrigerated surface tanks. Extensive pipeline and tank infrastructure is in place in USA. Since ammonia can be shipped and stored in mild steel pipelines and tanks, any natural gas or petroleum pipeline could be easily converted to carry NH_3.

Underground transmission pipelines, as would be required for GH2 and NH_3, are typically easier to site and permit than electric lines, and each may have multi-GW capacity.

Relieving RE generation / conversion equipment of the requirement to deliver "grid quality" AC (V, f, PF, and harmonics) as well as "low voltage ride through" (LVRT), because RE electricity is entirely delivered to electrolyzers and NH_3 synthesis systems, may significantly reduce the capital and O&M costs of RE.

The wind energy of the twelve Great Plains states, if fully harvested on about 50% of these states' aggregate land area, transmitted to distant markets, and "firmed" at annual scale with energy storage, could supply the entire annual energy demand of the USA: about 10,000 terawatt-hours (TWh = billion kWh), or about 100 quads (quadrillion btu). [12] However, existing Great Plains electric transmission export capacity is insignificant relative to this resource. Any large, new electric transmission systems, or fractions thereof dedicated to wind energy, will:

- Be very costly to build;
- Be difficult to site because FERC has no authority for permitting interstate electric lines;
- Be difficult to site and permit, because of public objection, as in NIMBY;
- Suffer the same low capacity factor (CF) (typically 40%) as the windplants and other RE plants they serve, unless RE generation is curtailed;
- Provide no affordable "firming" (weekly-to-annual scale) energy storage, thus taxing the "system balancing" ability of the electricity grid;
- Be vulnerable to damage by acts of God and man.

Two transmission and annual-scale, firming storage schemes seem technically and economically attractive for wind and other time-varying-output renewable electric energy sources at GW (nameplate) scale:

1. Conversion of electric energy to GH2, by electrolysis of water, at high pressure (30 – 150 bar); GH2 transmission and delivery by underground pipeline, with annual-scale firming storage of high-pressure GH2 in deep, solution-mined salt caverns;
2. Conversion of electric energy to NH_3, for transmission as liquid by underground pipeline,

Copyright © 2011 by ASME

delivery via pipeline, rail, and truck, with annual-scale firming storage as liquid NH_3 in large (10,000 – 60,000 ton) refrigerated, above-ground tanks.

Without any expansion of electricity transmission capacity, or technology breakthroughs, RE may be totally converted to GH2 or NH_3, transmitted over long distances using new or repurposed underground pipelines, firmed at annual scale in large GH2 storage caverns and above-ground NH_3 tanks, and marketed as fuel for vehicles and for combined-heat-and-power (CHP) distributed generation in:

- Internal combustion engine (ICE) and combustion turbine (CT) gensets adapted for NH_3 fuel;
- PEM hydrogen fuel cells, for GH2 and hydrogen "cracked" from NH_3;
- Direct-ammonia fuel cells.

The ICE operates efficiently on either GH2 or NH_3 fuel, and is a mature technology for both.

Total installed capital cost of large natural gas (NG) transmission pipelines, without compression, in year 2010 is ~$US 25 per inch diameter per meter length for terrestrial, ~$35 / inch / m for subsea. Compression adds ~ 15% to pipeline capital cost. [13,14,15]

Pipeline costs vary considerably, among projects, and with material prices and contractor availability. We assume that NH_3 pipelines, and GH2 pipelines fit for renewables-hydrogen service, can be built for the same cost as NG pipelines of the same diameter and rated pressure, assuming no incremental capital costs for GH2-capable line pipe, valves, and meters.

GW-km is a measure of the total transmission service provided by the system, useful for comparing transmission means and strategies. Large electric transmission lines cost about $1 million per GW-km as Frontier Line components. [16]

Fig. 2 shows the capacity of a 36" GH2 pipeline 1,600 km long is ~ 6 GW; thus total system capacity is 9,600 GW-km. From the estimate above, pipeline capital cost is ~ $US 5.4 billion, assuming no GH2 compression. Then, cost per GW-km is ~$560,000

A 10" mild steel pipeline, 1,000 km long, for liquid NH_3 at ~20 bar, has a continuous capacity of ~1 GW [17], with adequate pumping at midline stations, which would be adequate for a 2.5 GW nameplate windplant with internal NH_3 output smoothing or firming storage. Pipeline total installed capital cost is ~$320,000 per km, including pumping stations. A 1,000 km pipeline would cost ~$US 320 million; total system capacity is 1,000 GW-km; cost per GW-km is ~$320,000

Fig. 1. Thus, the relative capital cost of transmission systems may be approximately compared, per GW-km:

Electricity, 500 kV, AC or DC	$ 400-600K
GH2 pipeline, no compression	$ 560K
Liquid NH_3 pipeline, with pumping	$ 320K

New underground pipelines are generally less controversial, thus faster and easier to site and permit, than new overhead electric transmission lines. Pipelines are generally better protected from acts of God and man.

TRANSMISSION AND STORAGE COMPARISON

Fig. 1. We estimate costs of transmission and annual-scale firming storage of diverse, GW-scale, stranded renewables. No pilot plant exists for confirming the system capital costs and conversion efficiencies we estimate in this study, although both GH2 and NH_3 have been proposed for wind energy transmission and storage (References 3-9). Hydrogen is promising as a clean-burning energy carrier, and modern electrolyzers can produce large volumes of high-pressure hydrogen, ready for direct pipeline transmission and/or for ammonia synthesis, from renewable energy sources. Renewable-source hydrogen can alternatively be stored and transported as NH_3, which can be readily synthesized, following electrolysis, using atmospheric nitrogen, and be used at the delivery end-point as a fertilizer or a fuel. Both GH2 and NH_3 transmission and firming storage will accelerate our conversion from fossil to diverse renewable resources, via major new markets including, and beyond, the electricity sector.

If we find compelling the low capital cost (<$1 / kWh) of gaseous hydrogen (GH2) and liquid anhydrous ammonia (NH3) storage, we should consider solving all three problems of high-percentage-penetration of renewable energy (RE) on the electricity grid -- gathering and transmission, firming storage, grid integration -- via complete GH2 and / or NH3 systems at continental and multi-GW scale, which might be key to "running the world on renewables", as we eventually must.

All storage systems suffer the capital costs and energy conversion losses of transition to and from the energy supply and the storage medium. GH2 and NH3 transition costs may be higher than for some "electricity" storage systems, but may be justified by the ability of the complete renewable energy (RE) system to bring RE all the way from photons, moving air and water molecules, and other sources to firm, dispatchable, energy services required by humans.

Electricity Transmission and Storage

Making the electricity grid "smart" will add some virtual transmission capacity but no physical capacity. The marginal cost of grid integration for wind, and other renewables, will increase with the fraction of total energy supplied by renewables (except geothermal), in spite of valiant technical and policy integration efforts. [18]

Several hundred GW of new electricity transmission for RE, as proposed in Frontier Line, Green Power Express, Trans West Express, Clean Line, and others:

a. In aggregate capacity accommodate only a small fraction of the RE needed to meet climate change mitigation goals;

Copyright © 2011 by ASME

b. May be blocked, for too long, by local jurisdictions and popular opposition;
c. Cannot presently benefit from FERC, which lacks interstate jurisdiction for electricity line right-of-way and permitting.

Our electricity transmission cost benchmarks are Clean Line proposals and the Frontier Line Feasibility Study, which considered many multi-GW electricity transmission expansions, all at 500 kV, both AC and DC, from Wyoming south and west, with these typical results [19]:

- AC line construction cost $ 29.90 / MWh
- DC line construction cost $ 19.10 / MWh
- California system integration $ 3.00 / MWh
- Line losses $ 1.80 / MWh

Analysis of individual Frontier Line transmission links gives these mean capital costs for mixed AC and DC lines:

- Per GW $ 619 million
- Per mile $ 4.9 million
- Per GW-mile $ 1.4 million
- Per GW-km $ 0.9 million

Analysis of complete Frontier Line transmission system alternatives gives these mean capital costs:

- Per GW $ 1,375 million
- Per mile $ 3.2 million
- Per GW-mile $ 0.8 million
- Per GW-km $ 0.5 million

GW-mile and GW-km are measures of the total transmission service provided by the system. Whether these Frontier Line estimates include ROW lease or purchase is unknown. Large electric transmission lines cost $500K – $900K per GW-km.

GH2 Transmission and Storage

GH2 transmission requires line pipe material and system components able to resist and control, or be immune to, hydrogen embrittlement (HE). In contrast, NH_3 pipelines are moderate-strength, low-alloy, carbon steel. NH_3 does not attack steel.

Fig. 3 shows one solution to the HE danger, whereby the structural strength of steel is replaced by fiber-reinforced plastic (FRP) and the GH2 permeation barrier is reduced to a thin Cu or Al foil. This FRP linepipe can be fabricated on-site in a continuous process at an "all-in" capital cost of the commissioned pipeline of ~$125K / inch diam / km. [20]

Fig. 4. Without any expansion of the electricity transmission grid, all RE is converted at the windplant or other RE plant to GH2 fuel. High-pressure-output electrolyzers feed the pipeline directly at ~100 bar, from wind or other RE electricity sources. Other RE-source GH2 is delivered to the pipeline via compressors. Wind and other RE generators are interconnected via pipelines rather than via field-voltage electricity collection cables. The oxygen byproduct of electrolysis may be sold to adjacent coal and dry biomass gasification plants. A small amount of distribution-level electricity is required for the RE generation control systems.

Fig. 6. GH2 is stored at 100-150 bar in solution-mined salt caverns, typically 800,000 cubic meters physical volume, capable of storing ~ 2,500 net tons of GH2 in addition to ~2,000 tons of "cushion" GH2. The cavern top is typically ~800 m below ground level. The surface facility provides compression (if needed), GH2 gas drying upon withdrawal, and manifolding of multiple caverns in a storage array. Typically, capital cost of a completed facility is half cavern excavation, half surface facility. In Texas onshore domal salt, in a multi-cavern facility achieving maximum economy of scale, each cavern will cost ~$15-20 million and will store ~2,500 net tons GH2. Leakage and O&M cost, except for compression energy (if required), are very low.

About 15,000 such salt caverns could firm, at annual scale, the entire Great Plains, USA, wind resource, as GH2 fuel: ~10,000 TWh (~100 quads) per year. Synergy with solar and other renewables would reduce required cavern storage, perhaps dramatically. However, customers must now purchase energy only as GH2 fuel.

Germany considers GH2 cavern storage more attractive than compressed air energy storage (CAES) for integrating wind on their electricity grid. [21]

NH_3 Transmission and Storage

Iowa State University has hosted six annual Ammonia Fuel Conferences, which include NH_3 as an RE transmission and storage medium, as well as a transportation and distributed generation fuel. [22]

NH_3 contains no carbon; has physical properties similar to propane; liquefies at ambient temperatures at about 10 bar or at -33 degrees C at 1 atmosphere. Liquid ammonia has over 50% more volumetric energy than liquid hydrogen; more than twice the volumetric energy of hydrogen gas at 700 bar. It is the second-largest-volume industrial chemical in global trade: ~130 MMT / year, mostly for N-fertilizer. USA consumes ~15 MMT / year, with a good safety record. NH_3 is classified as an "inhalation hazard".

NH_3 is nearly 18% hydrogen by weight and has slightly over half the energy density of gasoline by volume. All of ammonia's energy is derived from its hydrogen content; it can be easily reformed to hydrogen and nitrogen, with N_2 returned to its source, Earth's atmosphere. NH_3 has the highest hydrogen content by volume of any liquid fuel, including gasoline, liquefied natural gas (LNG), liquefied petroleum gas (LPG, propane), ethanol, and even liquid hydrogen. Liquid anhydrous ammonia, NH_3, has more atoms of hydrogen per liter than liquid hydrogen. This ability of NH_3 to store hydrogen very compactly at ambient temperature and moderate pressure is a key advantage for NH_3 over GH2.

Like hydrogen, ammonia can burn directly in spark-ignited internal combustion engines and may also be fed directly to medium temperature solid oxide, proton-conducting ceramic,

Copyright © 2011 by ASME

and molten-salt direct-ammonia fuel cells. Ammonia combusts according to:

$$4\ NH_3 + 3O_2 \rightarrow 2N_2 + 6H_2O$$

with only nitrogen and water vapor as combustion products. Like hydrogen, ammonia is lighter than air and is not a greenhouse gas.

Figs. 9 and 11 show NH_3 value as an alternative to electricity for GW-scale RE transmission and storage. However, the electrolysis-plus-II-B synthesis process shown in Fig. 10 has too much capital cost operating at low CF, with the estimated cost of wind-source NH_3 at the plant gate > $1,000 / MT, which is not competitive with domestic or imported fossil-source NH_3. Consequently, SSAS, shown in Fig. 12, was developed to reduce the cost of RE-source NH_3. However, SSAS has not yet been demonstrated at commercial scale.

Figs. 9 and 13 show that a safe, reliable, proven ammonia delivery and storage infrastructure already exists in the US. Approximately 3,000 miles of carbon-steel ammonia pipeline is in service in America's agricultural heartland, mainly in the Corn Belt. Almost a hundred large terminals for refrigerated ammonia storage are distributed along the pipeline. Barges, trains, and trucks round out the delivery system, which supplies the ammonia from the terminal to the farmer when he needs it for the growing season. The state of Iowa, alone, has over 800 retail outlets where farmers buy "anhydrous" or "nitrogen", the vernacular for ammonia fertilizer, NH_3.

About 20,000 MW of nameplate Great Plains wind generation would be needed to produce 6 million tons of NH_3 per year, about one-third of the present USA demand for ammonia based fertilizer. This estimate is based on an overall 50% efficiency of converting wind power into energy stored as NH_3. Several times as much wind, or other renewables generation, would be needed to produce all of the USA NH_3 demand, especially if NH_3 also becomes widely adopted as a fuel.

Fig. 7. A large, liquid ammonia "atmospheric" storage tank typical in the Corn Belt, USA, stores refrigerated NH_3 at 1 atm, -33C. Typical capacity is 30,000 MT, equal to 190 GWh as H2 reformed from NH_3. This size mild steel, double-wall tank would cost ~$15M, or ~$77 / MWh.

Energy Storage Required to "Firm" Great Plains Wind

The modern world requires "firm" energy, which must mean that, every hour of every year:

a. A supplier and buyer can contract for an agreed amount of energy;
b. Energy demand, as managed and as variable, is met.

Consider the quantity of GH2 storage required to "firm" the output of a 2,000 MW (nameplate) Great Plains windplant which produces ~7 TWh in an average year. Using the numbers from "Seasonal Variability of Wind Electric Potential in the United States" [23], Table 3, for "North Central", normalized, yields these "seasonality factors":

Winter 1.20 Spring 1.17 Summer 0.69 Autumn 0.93

We find that expected average seasonal energy production for the 2,000 MW windplant would be (7 TWh / 4 seasons) = (1.75 TWh) x seasonality factor, above:

Winter = 1.75 x 1.20 = 2.10 TWh
Spring = 1.75 x 1.17 = 2.05 TWh
Summer = 1.75 x 0.69 = 1.21 TWh
Autumn = 1.75 x 0.93 = 1.63 TWh

The biggest difference between seasons is between Winter and Summer: 2.10 – 1.21 = 0.89 TWh. If all windplant energy is converted to GH2 for export, at the 75% efficiency typical of large-scale electrolyzers, this is apparently 0.71 TWh of GH2 storage needed. However, the biggest difference between adjacent, sequential seasons is between Spring and Summer: 2.05 – 1.21 = 0.84 TWh. If all windplant energy is converted to GH2 for export, at 75% electrolyzer efficiency, apparently [0.84 x 0.75 = 0.63] TWh = 630 GWh of GH2 storage is needed. The latter case is more relevant. Stored as "electricity" at 100% round-trip ideal efficiency, without 25% energy conversion loss in electrolysis, ~470 GWh storage would be needed; ~235 GWh storage per GW wind nameplate.

GH2 transmission pipelines are likely to operate at 100 – 150 bar maximum input pressure, with city-gate delivery at ~30 bar. An 800 km, 20" diameter GH2 pipeline, packed to 130 bar and unpacked to 65 bar, stores 936 tons of GH2 = 33,500 MWh. = 0.03 TWh, which we assume for this analysis.

Thus, geologic storage needed to seasonally "firm" 2,000 MW (nameplate) of Great Plains wind, over the maximum average seasonal variation, is: 0.63 - 0.03 = 0.6 TWh, which is equivalent to ~18,000 metric tons (MT) of GH2.

Thus, annual-scale firming of the output of a 2,000 MW (nameplate) windplant in the northern Great Plains requires energy storage of approximately:

- 470,000 MWh as electric energy, for which no affordable mechanism exists, or
- 18,000 tons of GH2, requiring about 6 large, solution-mined salt caverns, or
- 110,000 tons of NH_3, requiring about 4 typical, large, refrigerated, above-ground tanks.

No affordable electric energy storage technique or system capable of 470,000 MWh, for annual-scale firming of this quantity of Great Plains wind, is available or anticipated. The vanadium-redox battery energy storage system (VRB-ESS) presently provides the lowest-cost bulk electricity storage. VRB Power Systems, Canada, will sell a VRB-ESS flow battery to Tapbury Management, County Donegal, Ireland, for $US 6.3 million: 1.5 MW (charge and discharge rate), 12 MWh (total energy storage capacity). Storing 450,000 MWh would require ~37,000 of this VRB-ESS, at total capital cost > $US 100 billion, if mass production halved VRB-ESS cost

Copyright © 2011 by ASME

and if the optimum power: energy ratio for VRB-ESS components were determined.

Compressed air energy storage (CAES) may provide lower-cost "electricity" storage, but we need as-built storage capacity and capital and O&M costs for the proposed Iowa Stored Energy Park. No CAES plants have been built for decades, so costs are uncertain. Continental CAES capacity may be too geologically limited to facilitate the very large scale RE supply of firm energy humanity needs.

USA has several salt deposit realms with formations deep and tight enough to store GH2 in man-made caverns at 150 bar with negligible leakage. Fig. 6 shows GH2 storage caverns. Total capital cost for the 6 required GH2 caverns would be about $95M; for the 4 required NH_3 tanks would be about $90M. The wind or other RE is now sold as GH2 or NH_3 fuels for vehicles and DG of electricity in stationary CHP.

The oxygen byproduct of water electrolysis may be sold to adjacent new dry biomass and / or coal gasification plants, likely to be prevalent in the Great Plains.

Consider the optimistic estimated cost of annual firming storage for wind-source NH_3 production in a complete SSAS system with a 1,600 km NH_3 transmission pipeline: Replace the H-B reactor in Fig. 10 with the SSAS reactor in Fig. 12.

Total Installed Capital Cost
1,600 km pipeline with "Firming" NH_3 tank storage:

Windplant size 1,000 MW	
Wind generators	$ 1,000 [million]
ASU	100
SSAS Reactors	500
Pipeline, 10"	500
(2) NH_3 storage tanks @ $15M ea	30
TOTAL	$ 2,130

Tank storage: ~ 1 % of total capital cost

Storage Cost Comparison

Figs 5, 8. Delivering annually-firm energy from Great Plains wind will require > 300,000 GWh of storage per 1,000 MW of nameplate wind capacity. At this seasonal scale, power (charge and discharge rate) rating is much less important than energy rating. Estimated capital costs of 300,000 GWh storage:

As "electricity" in Vanadium Redox Battery (VRB)	$100B
As GH2 in salt caverns	$100M
As NH_3 in "atmospheric" surface tanks	$ 90M

Relatively little energy is required to compress GH2 to ~ 150 bar for optimal salt cavern economic utilization, and to dry the GH2 upon withdrawal from the cavern.

Relatively little energy is required to refrigerate the large (10-30,000 MT) "atmospheric" NH_3 storage tanks and to pump the pressurized liquid NH_3 upon withdrawal from the tank.

Arraying caverns and tanks to increase total storage capacity while sharing balance-of-plant infrastructure would further reduce energy capacity capital and O&M costs.

PILOT PLANTS NEEDED

We should assemble consortia to begin immediately to design and build pilot plants for RE-source GH2 and NH_3 transmission and firming storage, by which to discover and demonstrate their technical and economic feasibility – or lack thereof:

- Conceive: perform technical and economic feasibility studies; describe needed upstream R&D;
- Design: propose preliminary design specifications;
- Design: release a credible RFP or RFQ to determine costs to design, build, and operate the pilot plants;
- Build, own, operate: assemble a collaborative to fund the projects, to supply renewable-source GH2 and NH_3 fuels to the pilot plants, and to use the delivered fuels.

This pilot plant concept has been proposed as the International Renewable Hydrogen Transmission Demonstration Facility (IRHTDF). NH_3 fuel utilization demonstrations are easy, since the fuel is widely available as N-fertilizer: Fig 13. RE-source NH_3 synthesis plants will be more costly.

FURTHER WORK NEEDED

1. Develop new technologies and components for higher NH_3 energy conversion and synthesis efficiency at lower capital and O&M costs. Continuous improvement via R&D and demonstrations for both GH2 and NH_3 fuels.

2. Fig. 12. Solid state ammonia synthesis (SSAS), now a patented laboratory-scale device, needs R&D and demonstration at ~100 kW synthesis module scale, to learn whether it offers an economically-superior path to RE-source NH_3 production, vis-à-vis the Haber-Bosch synthesis path, and likely scaleup to MW scale.

3. Model continental-scale, multi-GW RE systems, to suggest optimum mix of electricity, GH2, NH_3 , and perhaps other transmission and firming storage strategies. This is consistent with the USDOE Strategic Plan 2011: "Catalyze the timely, material, and efficient transformation of the nation's energy system…" [24]

CONCLUSION

We are stuffing a square peg into a round hole, as we urgently transform the world's largest industry – energy – to "run the world on renewables" plus some hard-to-predict degree of nuclear, via electricity: it is not well suited to gathering and delivering diverse, dispersed, diffuse, time-varying-output RE to distant markets as firm and Dispatchable energy.

Copyright © 2011 by ASME

Only expanding, and making "smarter", the electricity gathering-transmission-storage-distribution grid will not allow replacing fossil-source energy with RE-source energy quickly enough to meet humanity's goal of preventing rapid and catastrophic climate change, by quickly reducing GHG emissions. "But this vision is also too good to be true… an incremental technology trend well under way rather than a disruptive technology that will transform the power sector in the next decade… " [25, 26]

We will need other transmission and storage media, systems, and strategies in addition to electricity. GH2 and NH_3 are attractive alternatives, for which pilot plants should soon be built, in order to discover and demonstrate their technical and economic feasibility and their acceptability to the public and to the business and finance communities. Both GH2 and NH_3 provide affordable seasonal-to-annual-scale firming storage for diverse RE resources, as well as the transmission paths for bringing GW-scale, stranded RE to distant markets. End-users purchase their energy as GH2 and / or NH_3 fuels, for CHP on-site generation, centralized generation, and for transportation fuels and for space-conditioning and industrial uses. Transmission pipelines for both GH2 and NH_3 fuels have multi-GW capacity over hundreds of km. These RE systems, as alternatives to electricity, deserve more serious technical and economic consideration than the authors are able to provide; we believe we have set the stage.

ACKNOWLEDGMENT

The authors gratefully acknowledge the contributions of Dr. J. G. Blencoe, Hydrogen Discoveries, Inc., to this paper.

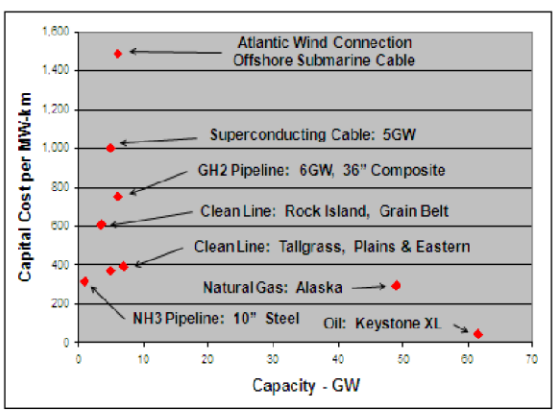

Fig. 1. Capital cost and rated transmission capacity for hydrocarbon pipelines (blue), RE-source pipelines (red), and electricity. Pipelines are underground. See proposed Alaska North Slope (ANS) Gasline [27]

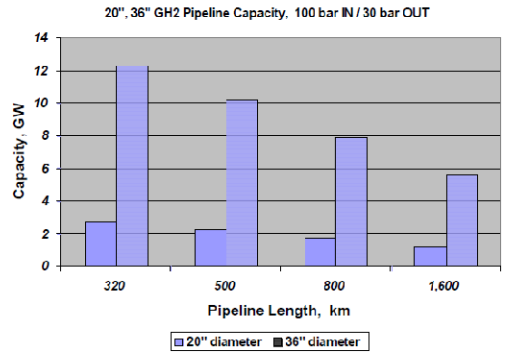

Fig. 2. Capacity of gaseous hydrogen (GH2) transmission pipelines, assuming: no input or midline compression; high-pressure-output electrolyzers deliver directly to pipeline at 100 bar; pipeline friction losses are accepted; delivery to city-gate market at 30 bar. Total transmission service capacity of an 800 km, 36" pipeline is ~6,400 GW-km.

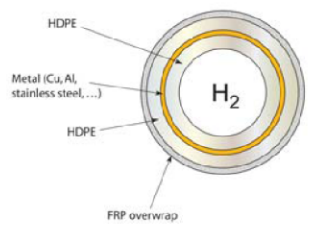

Fig. 3. Hydrogen Discoveries, Inc. (HDI) Polymer/Metal Pipe Technology, which avoids hydrogen embrittlement (HE, HCC) by eliminating alloy steel as a structural material. Primary GH2 diffusion barrier is a thin metal foil. This pipe can be fabricated up to 1m diameter, in the field, in unlimited lengths.

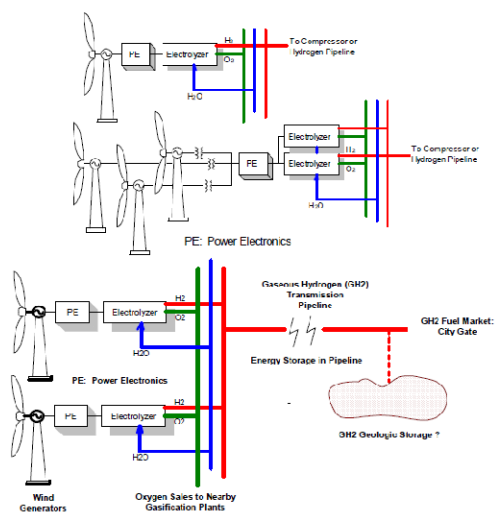

Fig. 4. System topology options for wind-to-hydrogen energy conversion, gathering, and transmission. The hydrogen may be delivered to transmission pipelines or to nearby NH_3 synthesis plants. Both GH2 and NH_3 may be stored, for affordably firming wind and diverse other RE resources.

Copyright © 2011 by ASME

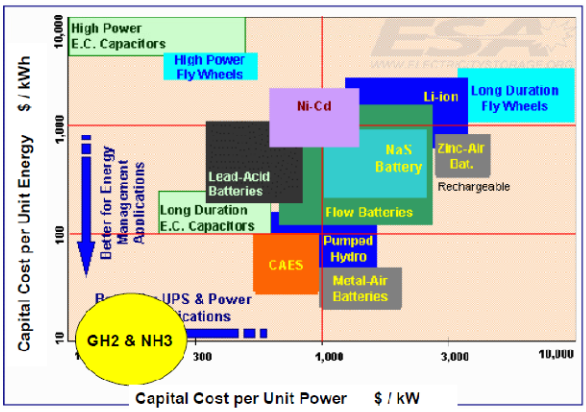

Fig. 5. Capital cost for modular gaseous hydrogen (GH2) storage in salt caverns and anhydrous ammonia (NH_3) storage in "atmospheric" surface tanks is low. Power cost is fluid handling and pumping. [28]

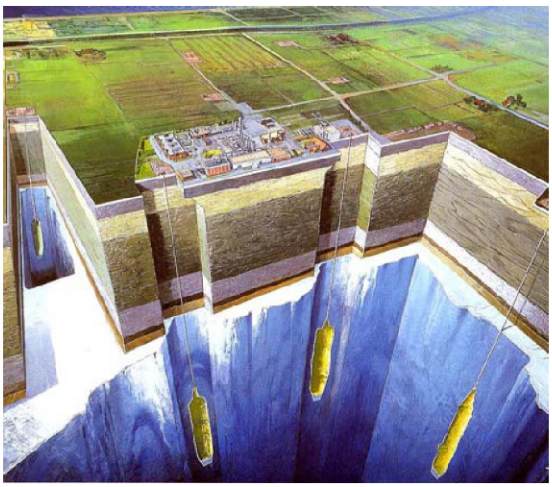

Fig. 6. Multiple large, solution-mined salt caverns in "domal" salt, suitable for high-pressure storage of GH2. A typical cavern will store 90,000 MWh as 2,500 net Mt of GH2 at 70-150 bar in ~800,000 cubic meters physical volume. Total capital cost of cavern, GH2 cushion gas, and shared surface facility is ~ $15M; ~$0.20 / kWh

Fig. 7. "Atmospheric" refrigerated liquid anhydrous ammonia (NH_3) tank stores 190,000 MWh as 30,000 Mt of NH_3 fuel. Total capital cost ~$15M; ~ $0.10 / kWh

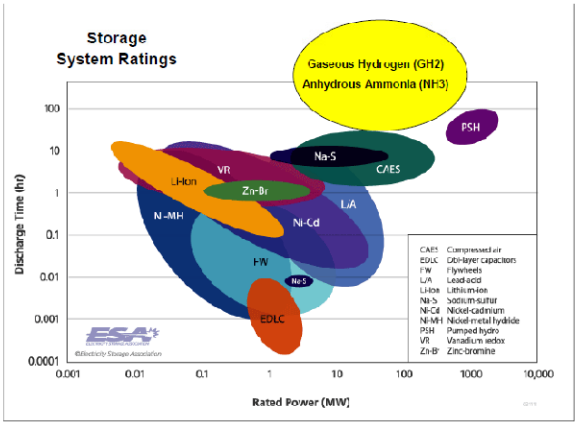

Fig. 8. Both GH2 and NH_3 provide very large capacity, low cost modular storage for annual-scale firming of diverse RE resources. [29]

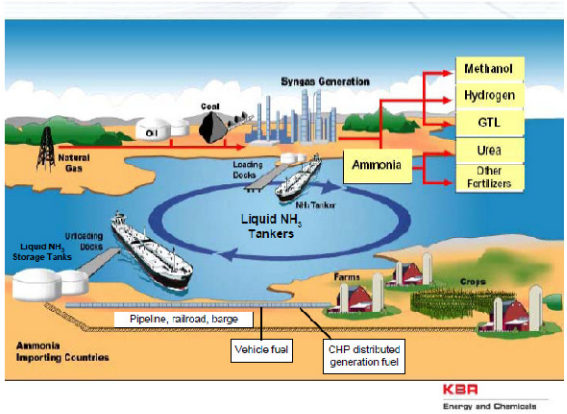

Fig. 9. Anhydrous Ammonia NH_3 Fuel Network. This paper assumes NH_3 production entirely from RE resources, with primarily terrestrial pipeline transmission. Globally, NH_3 is the second-largest volume industrial chemical.

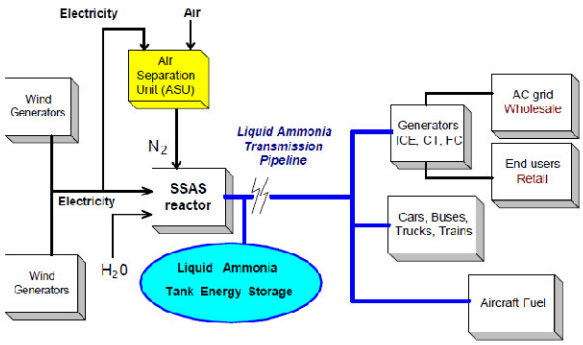

Fig. 10. NH_3 energy system: production from RE, with large-scale, low-cost energy storage and transmission for fuel distribution at distant markets. SSAS is Solid State Ammonia Synthesis.

Copyright © 2011 by ASME

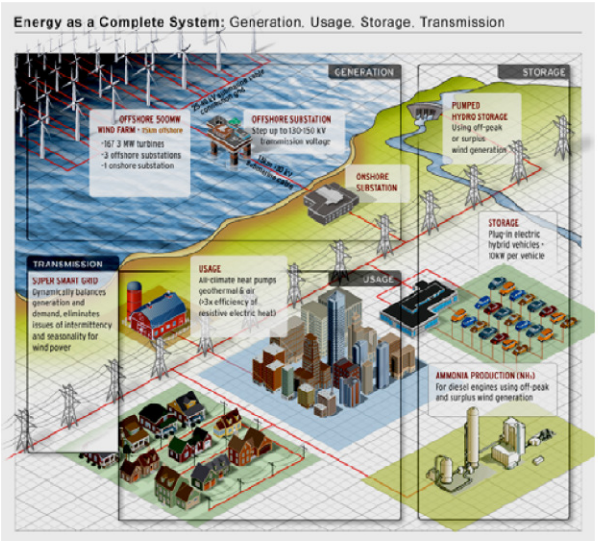

Fig. 11. Complete RE systems analysis must guide humanity's investments in diverse, yet complementary, transmission, firming, and distribution strategies. Note Ammonia Production, for which inexpensive storage tanks are available.

$$6\ H_2O + 2\ N_2 \rightarrow 3\ O_2 + 4\ NH_3$$

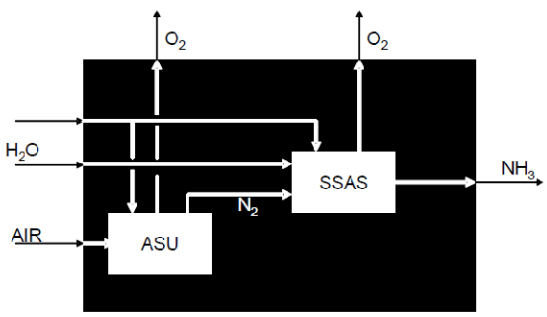

Energy consumption 7,000 – 8,000 kWh per ton NH_3

Fig. 12. Solid state ammonia synthesis (SSAS), an alternative to electrolysis plus Haber-Bosch synthesis, for NH_3 production from RE. Estimated energy conversion efficiency. As SSAS pilot plant has been proposed but not yet built. SSAS reactor construction uses proton conducting ceramic (PCC) tubes in a structure similar to a solid oxide fuel cell (SOFC).

Fig. 13. Extant liquid NH_3 pipeline and storage terminal network, handling ~15 MMT per year, primarily for N-fertilizer, of which ~60% is imported.

References

[1] V. Narayanamurti, L. Anadon, A. Sagar, "Transforming Energy Innovation", Issues in Science and Technology, National Academies, Vol XXVI, No.1, Fall 2009, p. 57-64

[2] http://www.oceanenergy.org/energysystem.asp

[3] Delucchi, M.A., Jacobson, M.Z., Providing all global energy with wind, water, and solar power, Part II: Reliability, system and transmission costs, and policies. Energy Policy (2011), doi:10.1016/j.enpol.2010.11.045

[4] Phyllis Cuttino, Director, Clean Energy Program, Pew Environment Group, on panel 16 Feb 11 at Environmental Grantmakers Association meeting, Washington, DC

[5] J. Holbrook and W. Leighty. "Transmission and firming of GW-Scale wind energy by ammonia pipelines and tanks", Proceedings of Windpower 07, AWEA, Los Angeles, June 07

[6] W. Leighty, M. Hirata, K. O'Hashi, J. Benoit. " Large stranded renewables: the international renewable hydrogen transmission demonstration facility (IRHTDF)". Proceedings of the 19th World Energy Conference, Sydney, AUS, Sept 04.

[7] W. Leighty, J. Holloway, R. Merer, B. Somerday, C. San Marchi, G. Keith, D. White. "Compressorless hydrogen transmission pipelines deliver large-scale stranded renewable energy at competitive cost". Proceedings of the 16th World Hydrogen Energy Conference, Lyon, FR, June 06.

[8] W. Leighty, M. Hirata, K. O'Hashi, J. Benoit, G. Keith. "Large renewables-hydrogen energy systems: gathering and transmission pipelines for windpower and other diffuse,

Copyright © 2011 by ASME

dispersed sources". Proceedings of the 22nd World Gas Conference, IGU, Tokyo, Jun 03.

[9] K. O'Hashi, M. Hirata, W. Leighty. "From a natural-gas-based to a hydrogen-based society: Proposal for a Northeast Asian hydrogen highway". Proceedings of the 23rd World Gas Conference, IGU, Amsterdam, NL, June 06

[10] J. Holbrook and B. Leighty, "Transmission and firming of GW-Scale wind energy via hydrogen and ammonia" , *Wind Engineering*, VOLUME 32, NO. 1, 2008, vol. 3, pp. 549-557, Apr. 1988.

[11] W. Leighty, "Running the world on renewables: Hydrogen transmission pipelines and firming geologic storage", Int. J. Energy Res. 2008; 32:408–426
Published online 17 January 2008 in Wiley InterScience (www.interscience.wiley.com) DOI: 10.1002/er.1373

[12] D. Elliott, L. Wendell, and G. Gower. "An assessment of the available windy land area and wind energy potential in the contiguous United States". Pacific Northwest Laboratory, PNL-7789 / NTIS no. DE91018887, September, 1991.

[13] http://www.isepa.com/about_isep.asp

[14] Personal communication, 4 Dec 07, with Dr. Mo Mohitpour, Tempsys Pipeline Solutions, BC, Canada

[15] Personal communication, 3 Feb 10, with Dr. K. O'Hashi, General Manager, Nippon Steel Engineering Co.,Ltd., Energy Facilitites, Civil Engineering & Marine Construction Division

[16] http://www.ftloutreach.com/images/FTL Final Report-Feasbility_Study_4-30-07.doc

[17] Personal communication, Eric Elrod, Koch Industries

[18] IEEE Power & Energy Magazine, Vol 7, No 6, Nov-Dec 09

[19] Renewable Energy Focus, Nov-Dec 07, p. 34-37

[20] Personal Communication 15 April 11 with Steve Catha, Smart Pipe Company, Inc., Houston http://www.smart-pipe.com/

[21] F. Crotogino and S. Huebner, "Energy storage in salt caverns: developments and concrete projects for adiabatic compressed air and for hydrogen storage", KBB Underground Technologies GMBh, Hannover, Germany. SMRI Spring Technical Meeting, Porto, Portugal, 28-29 Apr 08.

[22] http://www.energy.iastate.edu/Renewable/ammonia/ammonia/ammoniaMtg09.htm

[23] M.N. Schwattz, D.L. Elliott, G.L. Gower. "Seasonal variability of wind electric potential in the United States". PNL, 01 Jul 93, OSTI 10178386, DE93018182, PNL-SA-22090.

[24] http://energy.gov/media/DOE_StrategicPlan.pdf

[25] Issues in Science and Technology, Spring 2011, p 61-70, "The Smart Grid: Separating Perception from Reality", L.J. Makovich, Global Power Group, IHS Cambridge Energy Research Associates Larry.makovich@ihs.com

[26] Scientific American, November 2010, p 57-61, "How to Build the Supergrid", M.L. Wald

[27] ConocoPhillips ANS gasline at: http://www.ansnaturalgaspipeline.com/pdf/proposalsummary.pdf

[28] http://www.electricitystorage.org/ESA/technologies/

[29] http://www.electricitystorage.org/ESA/technologies/

Copyright © 2011 by ASME

LARGE STRANDED RENEWABLES:

the International Renewable Hydrogen Transmission Demonstration Facility (IRHTDF)

WILLIAM C. LEIGHTY, Director, The Leighty Foundation
Box 20993, Juneau, AK 99802, USA wleighty@earthlink.net

DR. MASARU HIRATA, Professor Emeritus, University of Tokyo; Professor, Shibaura Institute of Technology; Member, The Science Council of Japan
Fukasaku 307, Saitama 337-8570, JAPAN hirata@se.shibaura-it.ac.jp

DR. KAZUHIKO OHASHI, General Manager, Nippon Steel Corporation, Energy Engineering Division; 2-6-3 Otemachi, Chiyoda-ku, Tokyo 100-80 71, JAPAN
ohashi.kazuhiko@eng.nsc.co.jp

JACQUES BENOIT, Regional Director – Quebec, AMEC Earth & Environmental
2001 University Ave. Suite 1400, Montreal, Quebec H3A 2A6, CANADA
jacques.benoit@amec.com

A pilot-scale gaseous hydrogen (GH2) transmission pipeline system optimized to bring large-scale, remote, diverse, dispersed, stranded, renewable resources to distant markets, in "renewables-hydrogen service"

- No pipelines for renewables-hydrogen service exist.
- Major new industrial processes require pilot plants like IRHTDF.
- Electricity lines and GH2 pipelines are comparable in capital and O&M cost.
- GH2 transmission provides valuable storage, in the pipeline and in geologic formations.
- New underground GH2 pipelines may be more secure, socially acceptable, permittable, and bankable than new overhead electric lines.

Global Energy Strategy Challenge

- How shall we bring Earth's large, stranded, renewable resources to distant markets? Transmission options for large-scale stranded renewables:
  - New high voltage direct current (HVDC) electric lines
  - New gaseous hydrogen (GH2) transmission pipelines
  - Synthetic liquid hydrocarbons, with net-zero C emissions
  - Superconducting "Energy Pipeline" (EPRI, USA concept)
- Pipelining GH2 is costly. ~ 1.5 – 2 x that of natural gas :
  - Low volumetric energy density of hydrogen: one third that of natural gas
  - Pipeline systems must be safe from hydrogen attack: corrosion, cracking, embrittlement
  - Special compressors, valves, and meters required
- Will gaseous hydrogen (GH2) transmission pipelines be a major part of humanity's sustainable energy future? Under what circumstances? Can pipelined renewable source hydrogen compete with hydrogen from other sources?
- To discover, quantify, and demonstrate answers, we should begin, now, to:
  - Assemble and fund an international consortium
  - Design, build, and operate the IRHTDF
  - Operate IRHTDF first as an R&D lab, then as a test facility, then as a demonstration facility
  - Guide our global energy strategy

Rationale, purpose

- We need to rebuild humanity's energy system for all-renewable resources
- Earth's largest, richest renewable resources are stranded:
  - Far from population and load centers
  - Without gathering and transmission systems to deliver their energy
- Many costly, new, high-capacity transmission systems will be needed, worldwide, for these large, remote, stranded resources
- GH2 pipelines compete with HVDC electric transmission lines, in capital and O&M costs, conversion and transmission losses
- GH2 pipeline is the lowest-cost hydrogen transport mode for long distance and high power (flowrate)
- GH2 pipeline transmission systems must be optimized for renewables-hydrogen service:
  - High capacity: high pressure, large diameter, long distance
  - Accommodate frequent, large pressure cycles
  - Avoid hydrogen attack: corrosion, cracking, embrittlement
  - Provide storage in pipeline and in geologic formations
  - Deliver renewable-source GH2 at competitive cost
  - Add value from synergies among diverse renewable resources
  - Use valuable O2 byproduct of electrolysis for adjacent dry-biomass gasification plants
- No GH2 pipelines for renewables-hydrogen service exist; the extensive extant industrial GH2 pipeline system is not capable of renewables hydrogen service
- All major new processes require pilot plants:
  - Benefits, costs, synergies, technical obstacles must be identified and quantified; IRR and NPV predicted for full-scale facilities
  - IRHTDF is the ideal test and demonstration facility for renewables-hydrogen service, for GH2
- Will GH2 pipelines have a major role in humanity's sustainable energy future? Under what circumstances? IRHTDF is on the critical path to finding these answers.

IRHTDF status

- Concept only; no detailed engineering or economics studies
- No funding or consortium in place; now a leadership opportunity
- Probable $US 50 – 100M cost, 5 years, requires international effort
- Ideal project for:
  - IPHE (International Partnership for the Hydrogen Economy)
  - IEA Hydrogen Implementation Agreement (HIA)
  - EC, PATH (Partnership Advancing Transition to Hydrogen)

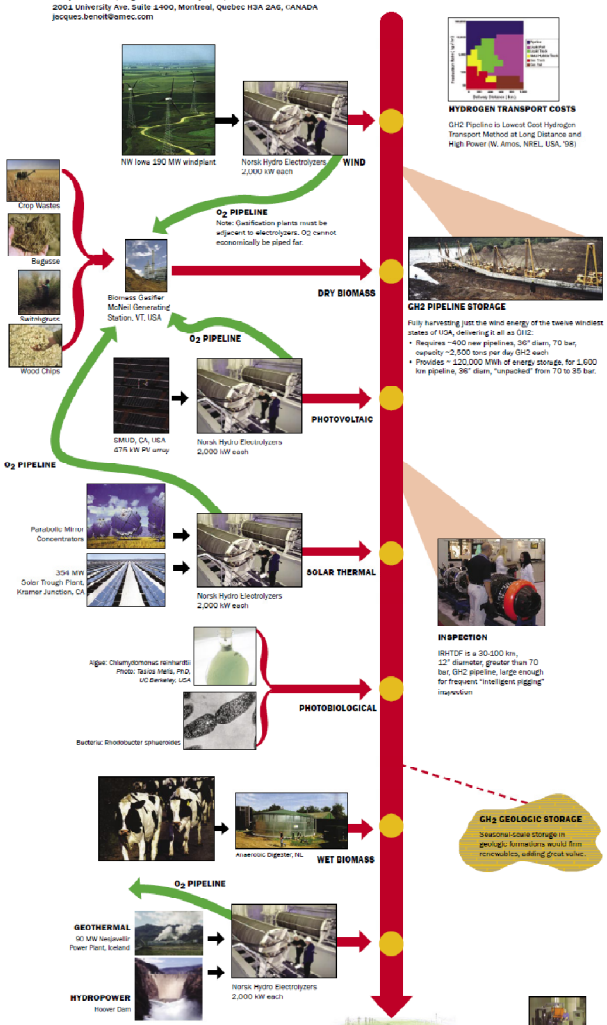

Opportunity: Proposed Northeast Asia Natural Gas Pipeline

Japan asks:

- Shall we build this large, new, natural gas pipeline system of hydrogen-capable line pipe, so that we may transition to 100% GH2 transmission, from abundant renewable sources along the pipeline route, as the natural gas is depleted?
- What is the incremental cost, if any, of building a new natural gas pipeline as 100% hydrogen-capable?
- What line pipe material(s) are capable of renewables-hydrogen service?

Opportunity: Great Plains, North America

Total annual wind energy, fully-harvested on half the land area of the twelve Great Plains states, would equal the TOTAL annual energy consumption of the USA. Delivering all this energy as GH2 would require ~ 400 new pipelines, 36" diameter, 70 bar.

Abundant wet and dry biomass, and other radiant-solar-driven energy conversion, could supply more GH2 to these transmission pipelines, in temporal and technical synergy.

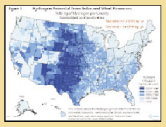

Opportunities: Global

Every continent has large, diverse, dispersed, renewable resources: enough for humanity's needs, but stranded and time-varying in output. How shall we bring this energy to distant markets, at large scale, at competitive cost?