25 April 2011
Memo to: Steve Koonin
From: Bob Williams
Subject: My prospective contributions to the QTR process

I appreciate the invitation to participate in the QTR process. Contributions I would like to make relate to the strategic importance of hybrid fossil/renewable energy technologies and strategies and hybrid liquid fuel/electricity technologies and strategies in providing both low carbon transportation fuels and low carbon electricity from secure domestic resources. This note is my initial contribution to the QTR prepared as an input to the QTR meeting on alternative fuels to be convened in Chicago later in this week.

Such hybrid strategies offer considerable technical and economic promise but are inherently hard for DOE to pursue because stovepiping constraints makes it difficult for the culturally different DOE divisions to collaborate to help bring such technologies into the market. Moreover, the categorization of options into the six strategies shown in Figure 2 of the QTR framing document virtually precludes serious consideration of hybrid strategies that involve the coproduction of transportation fuels and electricity. Leadership at high levels in DOE and The Administration is needed to overcome these organizational obstacles that stand in the way of substantial technological innovation that could be realized even during this decade with technologies near at hand.

From you tenure as Chief Scientist at BP you are familiar with two of these hybrid options that my Energy Systems Analysis Group (ESAG) at the Princeton Environmental Institute of Princeton University has been pursuing with BP support: the coprocessing of coal and biomass to coproduce synthetic liquid fuels and electricity with CCS, and the coupling of wind and natural gas via compressed air energy storage to provide baseload electricity. During 2010, because of encouragement from Ian Smale at BP as well as general bullishness about shale gas, ESAG has also been analyzing another important set of options: the coprocessing of natural gas and biomass to coproduce synthetic liquid fuels and electricity with CCS.

The rest of this memo discusses, as my initial QTR contribution, a comparison of the coprocessing of coal and biomass to coproduce synthetic liquid fuels and electricity with CCS to biofuel options for providing low carbon transportation fuels. The QTR Framing document refers only parenthetically (on page 25) to coal and biomass coprocessing—but not to natural gas and biomass coprocessing and not to options for the coproduction of synfuels and electricity. Moreover, there is no discussion of CCS for biomass-based systems—which can be very important to system economics under a carbon policy constraint—as will be shown later in this memo.

The QTR Framing Document refers to technology roadmaps for alternative fuels from the National Research Council's *America's Energy Future* study. Our ESAG carried out the gasification-based synfuels analysis during 2008/2009 for the Panel on Alternative Liquid Transportation Fuels for this *America's Energy Future* study. The results that ESAG provided to that NRC Panel that were eventually published in the *America's Energy Future* study were

independently published in our own much more detailed report that can be found in the *Proceedings of the 2008 International Pittsburgh Coal Conference*. The enclosed article published in January 2011 in *Energy and Fuels* (LIU et al., 2011) presents our updated and refined analysis of synthetic fuels production via Fischer-Tropsch synthesis.

Some important findings of our *Energy and Fuels* article (LIU et al., 2011) are presented in the attached set of ppt slides entitled "Comparison of Alternative Low-C Fuel Technologies" and summarized here for the seven alternative low-C fuel technologies listed in Slide # 1.

Five of these are FTL fuels technologies, which are among the 16 different FTL system configurations modeled in detail in the *Energy and Fuels* article. Three of these are recycle (RC) system configurations aimed at maximizing liquid fuel outputs and two are once-through (OT) system configurations in which syngas passes only once through the synthesis reactor and unconverted syngas is burned to produce electricity as a major coproduct. Two of the FTL systems involve biomass only—one (BTL-RC-V) with CO_2 vented and one (BTL-RC-CCS) with CO_2 capture and storage (CCS). System configurations for the three FTL systems that coprocess coal and biomass (CBTL options) are shown in Slides # 2 to # 4—one of which is a RC configuration (CBTL-RC-CCS) and the other two of which are OT configurations. One of the OT systems (CBTL-OT-CCS) involves "mild" CO_2 capture; the other (CBTL-OTA-CCS) involves "aggressive" capture.

The other two systems considered are cellulosic ethanol systems that vent CO_2 (EtOH-V) and capture the CO_2 generated in the fermenter (EtOH-CCS). The assumed EtOH-V system characteristics were developed by the Panel on Alternative Liquid Transportation Fuels of the *America's Energy Future* study; the added features of the EtOH-CCS variant[1] are based on ESAG analysis, and both are compared here in a self-consistent manner to the five FTL fuels options.[2]

Two metrics are introduced to measure the GHG emissions performance of these seven systems: a greenhouse gas emissions index (GHGI—see Slide # 5) and the greenhouse gas emissions avoided (GHGA—see Slide #7)—these indices measure the depth and breadth of mitigation, respectively. In addition, Slide # 6 shows, via the CBTL-OT-CCS example, how deep reductions in fuel-cycle-wide GHG emissions can be realized via the combination of CCS and biomass coprocessing with coal.

Another important metric in light of biomass supply scarcity if land-use conflicts with food production are to be minimized (as recommended by the Panel on Alternative Liquid Transportation Fuels of the *America's Energy Future* study) is the amount of biomass required to provide a unit of liquid fuel—which is shown for these seven systems in Slide # 8.

Finally, Slide # 9 shows for the seven options both the levelized cost of fuel (LCOF) and the fuel value as a function of the GHG emissions price.

---

[1] One mole of CO_2 is generated as a pure stream in the fermenter for each mole of C_2H_5OH produced; it is assumed that this pure CO_2 is captured for geological storage in EtOH-CCS systems.

[2] For detailed assumptions relating to the EtOH analysis see Tables E1 and E2 in Appendix E of the online supporting material for "Making Fischer-Tropsch Fuels and Electricity from Coal and Biomass: Performance and Cost Analysis" (LIU et al., 2011).

A synopsis of some important findings from this analysis is the following:

- A shift from –V to -CCS is important for fuels made using biomass—enabling:
  - Negative GHGI values for biofuels (see BTL-RC-CCS, EtOH-CCS in Slide # 5),
  - An GHGA increase of 93% for BTL-RC and 41% for EtOH[3] (Slide # 7),
  - Near zero GHGI values for systems coprocessing coal and biomass (Slide # 5).
- The GHGA per tonne of scarce biomass is very large for once-through CCS systems coprocessing coal and biomass—e.g., relative to EtOH-V, GHGA values for CBTL-OTA-CCS are ~ 3 X and ~ 6X as large for liquid fuels only and for the total energy system, respectively (see Slide # 7).
- The total amount of biomass required to provide 1 GJ of low-C fuel for the CBTL technologies is 36% to 50% as much as for EtOH technologies (see Slide # 8).
- Several important observations can be made from observation of the LCOF vs GHG emission price graphs presented in Slide # 9:
  - As a function of the GHG emissions price, the LCOF declines rapidly for BTL-RC-CCS[4], CBTL-OT-CCS[5], and CBTL-OTA-CCS[5] but only slowly for EtOH-CCS, BTL-RC-V, and CBTL-RC-CCS, and the LCOF increases slowly for EtOH-V.
  - The least costly EtOH option (EtOH-CCS) becomes cost competitive with crude oil-derived gasoline @ ~ \$65/t CO_{2eq}, while the least costly FTL option (CBTL-OTA-CCS) becomes cost-competitive with crude-oil-derived products @ ~ \$30/t when the crude oil price is \$100 a barrel.
  - For low-C CBTL systems processing the same total amount of biomass, OT options almost always provide FTL fuels at lower cost than can RC systems.[6]
  - For all GHG emissions prices considered, CBTL once-through systems with aggressive CO_2 capture provide low-C fuels at lower cost than can CBTL once-through systems with mild CO_2 capture.[7]

---

[3] The increase in GHGA with a shift from –V to –CC is much less for EtOH than for BTL because only 15% of feedstock C is stored for EtOH compared to 56% for BTL (see Slide # 1).

[4] As a result of the strongly negative GHG emission rate for BTL-RC-CCS (see Slide # 5).

[5] LCOF values depend on GHG emissions not only via the value of the system-wide GHG emissions but also via the credit for the sale of the electricity coproduct. It is assumed that the electricity coproduct is sold at an average price of \$60/MWh (the average US electricity generation price in 2007) + the value of the US average grid emissions in 2007 (636 kg CO_{2eq}/MWh). For CBTL-OT-CCS and CBTL-OTA-CCS options, the latter are negative and absolutely much greater than the former (which are slightly positive)—which gives rise to the strong negative slopes for the LCOF curves of these options.

[6] The two main reasons for this are the inherent higher energy conversion efficiency of OT systems compared to RC systems [see marginal electric generation efficiency (MEGE) discussion in LIU et al. (2011)] and the much lower electricity fraction of the energy output of RC systems (see Slide # 1)—which implies a LCOF that declines only slowly with GHG emissions price because of the lower GHG emissions credit from the sale of the electricity coproduct.

[7] While very high GHG emission prices are needed to make a CTL once-through system with aggressive capture cost competitive with the mild capture alternative, a CBTL once-through system with aggressive capture is competitive with the mild capture alternative even at a GHG emissions price of \$0/t CO_{2eq} for two reasons: (i) it implies that a lower biomass fraction of the total feedstock is needed to realize a given GHGI value—so that the average feedstock cost is less; (ii) for the same total quantity of delivered biomass, a plant of greater output capacity can be built, for which there are significant economies of scale.

- The option providing the least costly liquid fuel is CBTL-OTA-CCS up to a GHG emissions price ~ $120/t, above which BTL-RC-CCS provides the least costly liquid fuel.
- The CBTL once-through options offer a high degree of protection against the financial risk of oil price collapse under a strong C-mitigation policy—e.g., CBTL-OTA-CCS is cost-competitive with crude oil-derived products for crude oil priced at $60 a barrel when the GHG emissions price is $75/t of CO_{2eq}.

Some of the most important implications of these findings for public policy are:

- A much better balance between biochemical conversion processes (which dominant the current biofuels program) and thermochemical conversion processes based on gasification and is needed in light of the possibilities for much greater carbon mitigation benefits (see Slide # 7), reduced biomass requirements for making liquid fuels (see Slide # 8), and lower LCOF values (see Slide # 9) for thermochemical conversion based on gasification compared to biochemical conversion processes—despite the higher capital intensity of the thermochemical processes (see Slide # 1).
- CCS for biomass energy warrants high priority in light of the huge C-mitigation benefits offered by exploiting the negative GHG emissions benefit of photosynthetic CO_2 storage (see Slide # 7) and the powerful economic benefits offered by such systems under a C-mitigation policy (see Slide # 9).[8]
- CBTL systems warrant high priority for thermochemical conversion processes based on gasification—in light of the carbon mitigation (see Slide # 7), biomass-saving (see Slide # 8), and economic attractions (see Slide # 9) of these systems.
- CBTL systems that generate electricity as a major coproduct of liquid fuels warrant high priority in light of the C-mitigation (see Slide # 7), biomass-saving (see Slide # 8), and economic attractions (see Slide # 9) of these systems.

The most important technologies highlighted here are discussed nowhere in the QTR Framing Document, and most stakeholder groups are completely unaware of these options. That situation will be unchanged until this class of technologies is demonstrated at commercial scale.

The DOE should give priority to demonstrating technologies similar to CBTL-OTA-CCS at commercial scale. This could be accomplished during this decade with technologies that are ready to be deployed if the captured CO_2 is used for enhanced oil recovery applications (commercial technology) and if the biomass fraction of the input is sufficiently low that biomass/coal coprocessing can be carried out via cogasification of biomass and coal in a suitable

[8] In the global integrated assessment community, it is now widely recognized that the cost of reaching carbon mitigation goals would be substantially less if CCS for biomass energy systems is included in the portfolio of carbon mitigation options. See, as examples: (i) Karlsson, H., and Bystr?m (Biorecro AB), 2011: *Global Status of BECCS Projects*, a report prepared for the Global CCS Institute, Canberra, Australia, March; (ii) Azar, C., Lindgren, K., Obersteiner, M., Riahi, K., van Vurren, D.P., den Elzen, K.M.G.J, M?llersten, K., and Larson, E.D. 2010: The feasibility of low CO_2 concentration targets and the role of bio-energy with carbon capture and storage (BECCS). *Clim. Change*. 100: 195-202; and (iii) Luckow, P., Dooley, J.J., Wise, M.A., and Kim, S.H. 2010: *Biomass Energy for Transport and Electricity: Large Scale Utilization Under Low CO_2 Concentration Scenarios*, Report PNNL-19124 prepared for the US Department of Energy, January.

entrained-flow coal gasifier (commercially ready technology)—the 250 MW_e Buggenum integrated gasifier combined cycle power plant in The Netherlands has been operating with up to 30% biomass on a dry mass basis since 2006.

Gathering the needed government support for such a demonstration project could be facilitated by coprocessing enough biomass such that the synthetic fuels produced would qualify as advanced biofuels under the RFS2 mandate of the EISA of 2007—because such fuels, which must realize a fuel cycle wide GHG emissions rate no greater than 50% of the emissions rate for the crude oil products displaced, are likely to command prices that are much higher than market prices for crude oil-derived products.

For a variant of CBTL-OTA-CCS designed with enough biomass to realize GHGI = 0.5, the GHG emissions rate for the FTL provided would quality (@ 45.8 kg CO_{2eq}/GJ) as an advanced biofuel under RFS2, at the same time the emission rate for the electricity co-product would be 415 kg CO_{2eq}/MWh (which is comparable to the emission rate for a new natural gas combined cycle with CO_2 vented @ 421 kg CO_{2eq}/MWh). The biomass required as input for this system is 5% on a HHV basis or 8% on a dry mass basis. Such a plant with 500 MW_e of electric output would consume 0.34 million dry tonnes per year of switchgrass and provide as a coproduct 22,500 barrels per day of gasoline equivalent FTL products. If the captured CO_2 were used for enhanced oil recovery in operations for which the CO_2 purchase requirement is 1 tonne of CO_2 per incremental barrel of crude oil provided [close to the current rate for Denbury in Mississippi, where pure CO_2 rather than WAG (the Permian Basin practice) is used for EOR], the final products derived from this extra crude oil (gasoline, diesel, and jet fuel) would amount to 19,000 barrels per day of gasoline equivalent. ESAG cost modeling for an NOAK version of such a plant estimates an overnight construction cost of $3.0 billion. The capital cost for a FOAK plant might be more than double this amount.

The crude oil-derived products arising from EOR for the above-described candidate CBTL-OTA-CCS demo project would enhance energy security goals but not carbon mitigation goals. However, if the biomass in the feedstock were increased to 18% on an energy basis (26% on a dry mass basis), a GHGI = 0.5 could be realized for the entire system including the crude oil-derived products arising from EOR. In this instance the crude oil-derived products would also meet the emissions requirement for advanced biofuels under the RFS2 mandate. If such a plant were constrained to consume no more than 1 million dry tonnes per year of biomass (which ESAG analysis suggests is a practical upper limit for truck delivery of biomass), the output capacities of such a CBTL-OTA-CCS plant would be 449 MW_e, 19,200 B/D gasoline equivalent of FTL fuels, and 17,600 B/D gasoline equivalent of crude oil-derived products. A demo plant consuming this % biomass is probably near the upper limit of what could be considered for a demo project in this decade.

The prospects for a successful commercial scale demonstration project of CBTL-OTA-CCS technology with a modest biomass input rate would be greatly enhanced if this demo project were bolstered by an intensive DOE/USDA R&D program relating to lignocellulosic biomass supply logistics, biomass feedstock preparation, and biomass feeding into pressurized gasifiers—e.g., biomass torrefaction might be needed to enhance the prospects for success with these early projects.

I was pleased to learn that, in his exchanges with Senator Manchin and Congressman Shimkus in Senate and House hearings on the DOE budget during February and March, Secretary Chu expressed the Administration's strong interest in advancing the coal/biomass to liquids with CCS concept. This stated interest is at odds with the current DOE budgetary stance of the Administration: According to the QTR Framing Document, "DOE currently has no activities related to liquid transportation fuels from fossil feedstocks."

On the upside, I note that the Administration's new Energy Security Initiative apparently includes up to $30 M over 3-4 years to support research and development in advanced biofuels, bioenergy and high-value biobased products via funding through the Biomass Research and Development Initiative (BRDI) of the Departments of Agriculture (USDA) and Energy (DOE). It would be appropriate to allocate some of these funds to support R&D related to the proposed demo (as sketched out above) that would be carried out collaboratively by USDA and EE/RE and FE at DOE.

Attachments

Guangjian LIU, Eric. D. Larson, Robert H. Williams, Thomas. G. Kreutz and Xiangbo GUO, 2011: "Making Fischer-Tropsch Fuels and Electricity from Coal and Biomass: Performance and Cost Analysis," *Energy and Fuels* **25**, 415-437, *DOI:10.1021/ef101184e* (published online: 6 December 2010)

Guangjian LIU, Eric. D. Larson, Robert H. Williams, Thomas. G. Kreutz and Xiangbo GUO, 2011: Online Supporting Material for "Making Fischer-Tropsch Fuels and Electricity from Coal and Biomass: Performance and Cost Analysis," *Energy and Fuels* **25**, 415-437, 2011

Williams, Robert H., 2011: Comparison of Alternative Low-C Fuel Technologies, ppt slides prepared for Steve Koonin and the QTR, 25 April

Comparison of Alternative Low-C Fuel Technologies

Prepared for Steve Koonin and the QTR
by
Robert H. Williams
Princeton Environmental Institute
Princeton University

25 April 2011

#1: Features of Alternative Systems Providing Low-C Fuels

Technology[a]	% bio-mass (HHV basis)	Output Capacities		CO_2 stored, 10^6 t/y	% of C in feed-stock stored as CO_2	TPC[b], $\$10^6$
		Fuels, B/D of gasoline equivalent	Electricity, MW_e (% of energy output)			
EtOH-V	100	1,941	2.0 (1.76)	0	0	156
EtOH-CCS	100	1,941	0.62 (0.55)	0.11	15	158
BTL-RC-V	100	2,241	19.3 (13)	0	0	408
BTL-RC-CCS	100	2,241	14.2 (9.8)	0.44	56	416
CBTL-RC-CCS	45	4,882	24.3 (7.9)	0.91	54	733
CBTL-OT-CCS	40	3,984	117.5 (34)	1.04	54	764
CBTL-OTA-CCS	29	5,395	131.4 (30)	1.70	65	939

[a] Based on LIU et al. (2011). All systems consume 0.46 x 10^6 dry tonne/y of switchgrass.

[b] TPC (total plant cost) values are for NOAK plants and construction as of 2007.

2: CBTL-RC-CCS (*"Mild" CO_2 Capture*)

Coal + biomass to FTL fuels (diesel + finished gasoline) + electricity in "recycle" (RC) system configuration with "mild" CO_2 capture (only naturally concentrated CO_2 streams are captured)

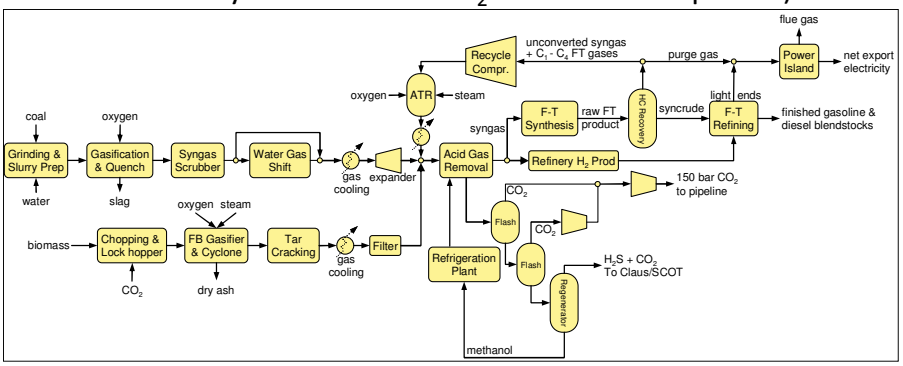

GEE entrained flow gasifier for coal; GTI fluidized bed gasifier for biomass; liquid-phase FT synthesis reactor; Fe FT synthesis catalyst; syngas unconverted in a single pass through synthesis reactor is recycled with the aim of maximizing syngas conversion to liquid fuels; purge gases from F-T synthesis and light ends from F-T fuels refining are burned in the combustor of a steam turbine power plant on the power island.

3: CBTL-OT-CCS (*"Mild" CO_2 Capture*)

Coal + biomass to FTL fuels + electricity in "once-through" (OT) system configuration with "mild" CO_2 capture (only naturally concentrated CO_2 streams are captured)

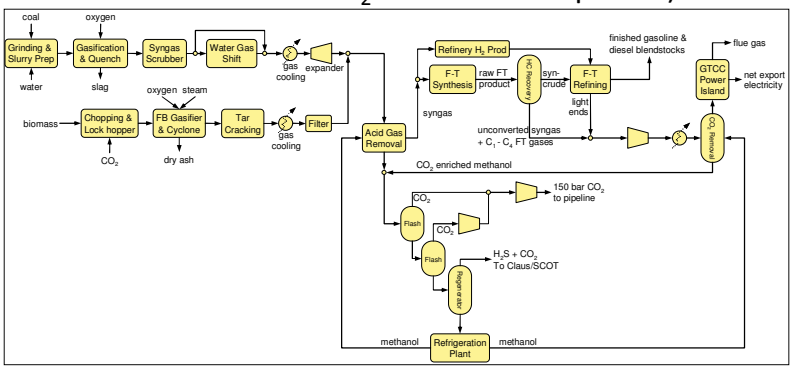

This OT configuration differs from the RC configuration in that syngas unconverted in a single pass through the synthesis reactor, along with light ends from F-T fuels refining, are burned in the gas turbine combustor of a GTCC power plant on the power island; because the Fe catalyst has water gas shift activity, CO_2 is captured from concentrated streams downstream as well as upstream of synthesis.

4: CBTL-OTA-CCS (*"Aggressive" CO_2 Capture*)

Coal + biomass to FTL fuels + electricity in once-through system configurations with aggressive CO_2 capture

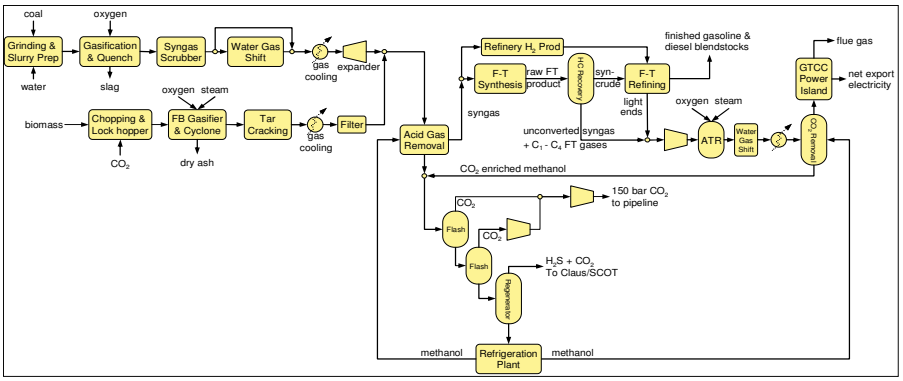

This OT configuration with aggressive capture differs from the OT configuration with mild capture in that an autothermal reformer (ATR), a water gas reactor, and extra CO_2 removal equipment, are added downstream of synthesis to convert most C_1-C_4 gases in unconverted syngas and light ends from FT refining into mainly H_2 and CO_2; the extra CO_2 so produced is captured for storage; the fuel burned in the gas turbine combustor of the GTCC power plant on the power island is mainly H_2.

5: GHG Emissions Index (GHGI) for Alternative Energy Systems

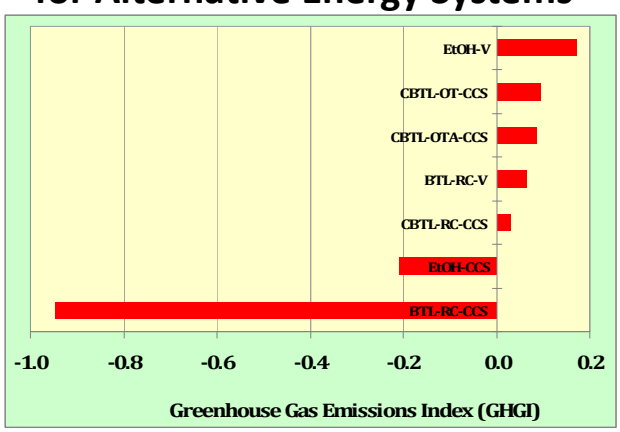

$$GHGI \equiv \frac{(\text{total GHG emissions for energy production \& consumption})}{(\text{total GHG emissions for fossil energy displaced})}$$

It is assumed that fossil energy displaced = (equivalent crude-oil-derived products) + (electricity from a new supercritical coal steam-electric plant venting CO_2).

6: C Balances and GHG Emission Flows for CBTL-OT-CCS

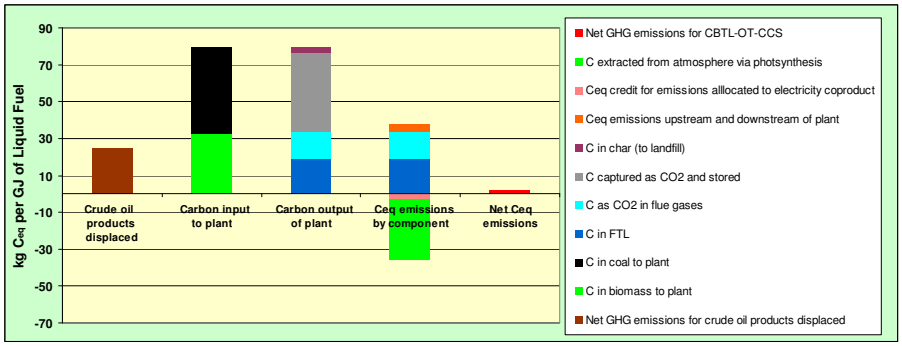

This graph shows how GHGI = 0.093 is realized for CBTL-OT-CCS (40% biomass input, HHV basis), for which 52%, 24%, 18%, and 4% of feed-stock carbon ends up in, respectively, geological storage, FTL fuels, flue gases, and the char residue of coal and biomass gasification (for which landfill disposal is assumed). Shown for comparison (left-most bar) is the fuel cycle-wide GHG emission rate for crude oil products displaced.

7: GHG Emissions Avoided (GHGA) for Alternative Energy Systems

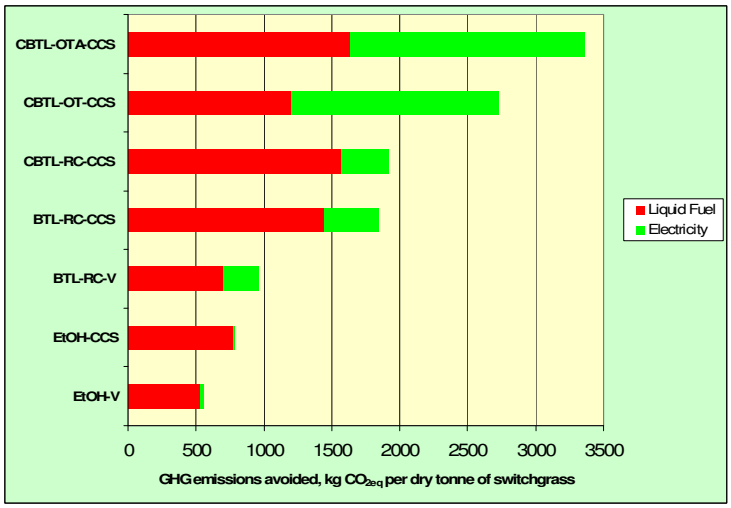

GHGA ≡ (1 – GHGI)*(Fuel-cycle-wide GHG emissions for displaced fossil energy)

8: Primary Energy Consumed per Unit of Low-C Liquid Fuel Produced

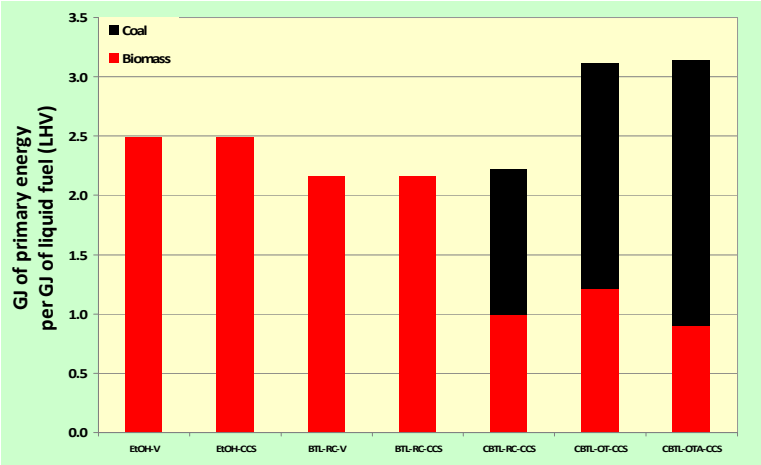

All primary energy is allocated to liquid fuel even though electricity is also produced.

9: Levelized Cost of Fuel (LCOF) and Fuel Value vs GHG Emissions Price for Alternative Low-C Technologies

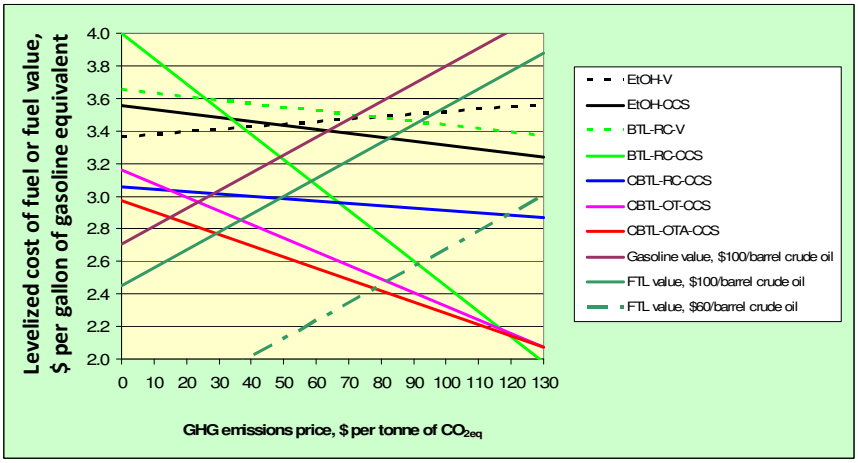

The methodology for calculating LCOEs and fuel values is discussed in LIU et al. (2011) for these seven systems for which many features are presented in Slide #1 (GHG emission characteristics and energy input requirements for fuels manufacture are summarized in Slides # 5 - #7). Assumed fuel prices (HHV basis) are $2.0/GJ and $5.0/GJ for coal and switchgrass, respectively.

10: Slides Presented Here Are Based on:

Guangjian LIU, Eric. D. Larson, Robert H. Williams, Thomas. G. Kreutz and Xiangbo GUO, 2011: "Making Fischer-Tropsch Fuels and Electricity from Coal and Biomass: Performance and Cost Analysis," *Energy and Fuels* **25**, 415-437, *DOI:10.1021/ef101184e* (published online: 6 December 2010)

Guangjian LIU, Eric. D. Larson, Robert H. Williams, Thomas. G. Kreutz and Xiangbo GUO, 2011: Online Supporting Material for "Making Fischer-Tropsch Fuels and Electricity from Coal and Biomass: Performance and Cost Analysis," *Energy and Fuels* **25**, 415-437, 2011