Sempra Generation

US Department of Energy
MAR 20 2008
Electricity, Delivery and Energy Reliability

March 19, 2008

Anthony Como, Director
Permitting and Siting, U.S. Department of Energy
1000 Independence Avenue
Room 6H-050, OE-20
Washington, DC 20585

Subject: Submittal of Addendum for Baja Wind U.S. Transmission, LLC Application for Presidential Permit, PP-334

Dear Mr. Como:

Sempra Generation on behalf of Baja Wind U.S. Transmission, LLC (Baja Wind U.S.) hereby submits an addendum to the Application for a Presidential Permit Docket Number PP-334. As you know, our December 18, 2007 application indicated that we would construct a 500-kV generation tie line to electrically interconnect up to 1250 MW from renewable energy generators (to be located in the vicinity of La Rumorosa, Baja California, Mexico) with the Imperial Valley-Miguel segment of the Southwest Powerlink (SWPL) 500-kV transmission line.

Since submittal of the application, there has been further refinement of various matters associated with the project:

1. In our December application, we indicated the potential to cross the international border with a double circuit 230-kV generation tie line instead of a single circuit 500-kV generation tie line. Since the time of our December application, the double circuit 230-kV alternative has been confirmed as a viable option, and we are hereby adding it to the interconnection alternatives included in the application. The overall maximum capacity of the generation tie line remains unchanged at 1250 MW, and each 230-kV circuit would have a capacity of 1250 MW for purposes of redundancy only. The preferred routes are Route A1 for a 500-kV generation tie line and Route A2 for a 230-kV generation tie line, both of which are entirely within private property.

   Attached are (i) Table 1 providing design information for the 500-kV and 230-kV alternatives, (ii) a revised Exhibit B detailed area map showing Routes A1 and A2, and (iii) supplemental Exhibits D4 and D5 providing drawings of typical lattice tower and steel monopole structures for the 230-kV alternative. As compared with our December application, Route A1 has shifted to reflect additional information from SDG&E concerning design of the SWPL loop-in substation. Depending upon the final design, Route A1 or A2 could shift within the shaded, V-shaped area depicted in Exhibit B, but the crossing point at the international border will remain unchanged.

2. We have eliminated Route C, the westernmost route, from further consideration, due to potential aviation impacts on a local air strip near the town of Jacumba.

3. We have eliminated from consideration the potential for undergrounding of the generation tie line.

4. We have eliminated the initial activity described in our December application of installing 10 MW of wind generation to have been interconnected locally to the CFE electrical grid (the Jacume Project).

5. The wind turbine layout for Phase I described in our December application has been modified to reduce the number of turbines to between 65 and 75 turbines. Depending upon the manufacturer and model, this translates to between 130 MW and 190 MW of generating capacity.

6. In our December application, power flow plots were provided from an approved WECC 2009 Heavy Summer case, which is prior to the planned in-service date for the Sunrise Powerlink transmission line proposed by SDG&E to extend from Imperial Valley substation to the San Diego area. Since the time of our December application, the CAISO has indicated that the Sunrise Powerlink or other transmission upgrade will be necessary to delivery energy from our wind energy development in the La Rumorosa area. Attached is a revised Exhibit E providing power flow plots that reflect this change and also show the generation tie line fully loaded to 1250 MW.

Should you have any questions or comments on the application, please contact Ms. Joan Heredia at (619) 696-1824. We look forward to working with on this project.

Sincerely,

Joseph H Rowley

Joseph H. Rowley
Vice President – Project Development
Sempra Generation

Enclosures

cc: Alberto Abreu
Joan Heredia

LIST AND SUMMARY OF ATTACHED EXHIBITS

Following are summaries of the exhibits contained in this addendum:

Table 1	Design information for the 500-kV and 230-kV alternatives
Exhibit B	Detailed area map (revised)
Exhibit D4	Typical 230-kV lattice tower
Exhibit D5	Typical 230-kV steel monopole
Exhibit E	System power flow plots (revised)

TABLE 1

Design information for the 500-kV and 230-kV alternatives

Presidential Permit Application

Baja Wind U.S. Transmission, LLC

500-kV and 230-kV Alternatives

	Parameter	500-Kv	230-kV
1	Maximum Capacity	1250 MW	1250 MW
2	Nominal Operating Voltage	500-Kv	230-kV
3	Maximum Operating Voltage	525-Kv	245-kV
4	Number of Circuits	Single Circuit	Double Circuit
	Redundancy Provided	No	Yes
5	Conductor Type per Phase	1 x 2156 kcmil ACSR/AW or 2 x 954 kcmil ACSR *	2 x 2156 kcmil ACSR/AW or 2 x 1113 kcmil ACSS *
6	Insulators per Phase	Double	Single
7	Horizontal Spacing between Phases	31 ft	34 ft
8	Vertical Spacing between Phases	Not Applicable	21 ft
9	Horizontal Spacing between the Structure and Each Phase	13 ft	13 ft
10	Vertical Spacing between the Structure and Each Phase	11 ft	9 ft
11	Minimum Ground Clearance	39 ft	34 ft
12	Permanent Right-of-Way	214 ft	130 ft
13	Temporary Construction Easement	100 ft additional to ROW	70 ft additional to ROW
14	Number of Structures	4 or 5	4 or 5
15	Maximum Spacing of Structures	1500 ft	1500 ft
16	Temporary Land Disturbance at Each Structure	150 ft x 200 ft (0.69 acre)	120 ft x 160 ft (0.44 acre)
17	Temporary Land Disturbance for All Structures	3.45 acres for 5 Structures	2.20 acre for 5 Structures
18	Temporary Land Disturbance at Wire Stringing Site	120 ft x 250 ft (0.69 acre)	130 ft x 180 ft (0.54 acre)
19	Permanent Land Disturbance at Each Structure	50 ft x 50 ft (0.06 acre)	45 ft x 45 ft (0.05 acre)
20	Permanent Land Disturbance for All Structures	0.30 acre for 5 Structures	0.25 acre for 5 Structures
21	Maximum Height of Lattice Towers	150 ft	150 ft
22	Maximum Base of Lattice Towers	34 ft x 34 ft	29 ft x 29 ft
23	Foundation of Lattice Towers at Each Corner	3-6 ft diameter	3-6 ft diameter
24	Maximum Height of Steel Monopoles	170 ft	150 ft
25	Base of Steel Monopoles	4-6 ft diameter	3-6 ft diameter
26	Top of Steel Monopoles	1-2 ft diameter	1-2 ft diameter
27	Foundation of Steel Monopoles	7-9 ft diameter	6-9 ft diameter

* Conductors may be alternative types of similar ampacity.

EXHIBIT B

Detailed area map (revised)

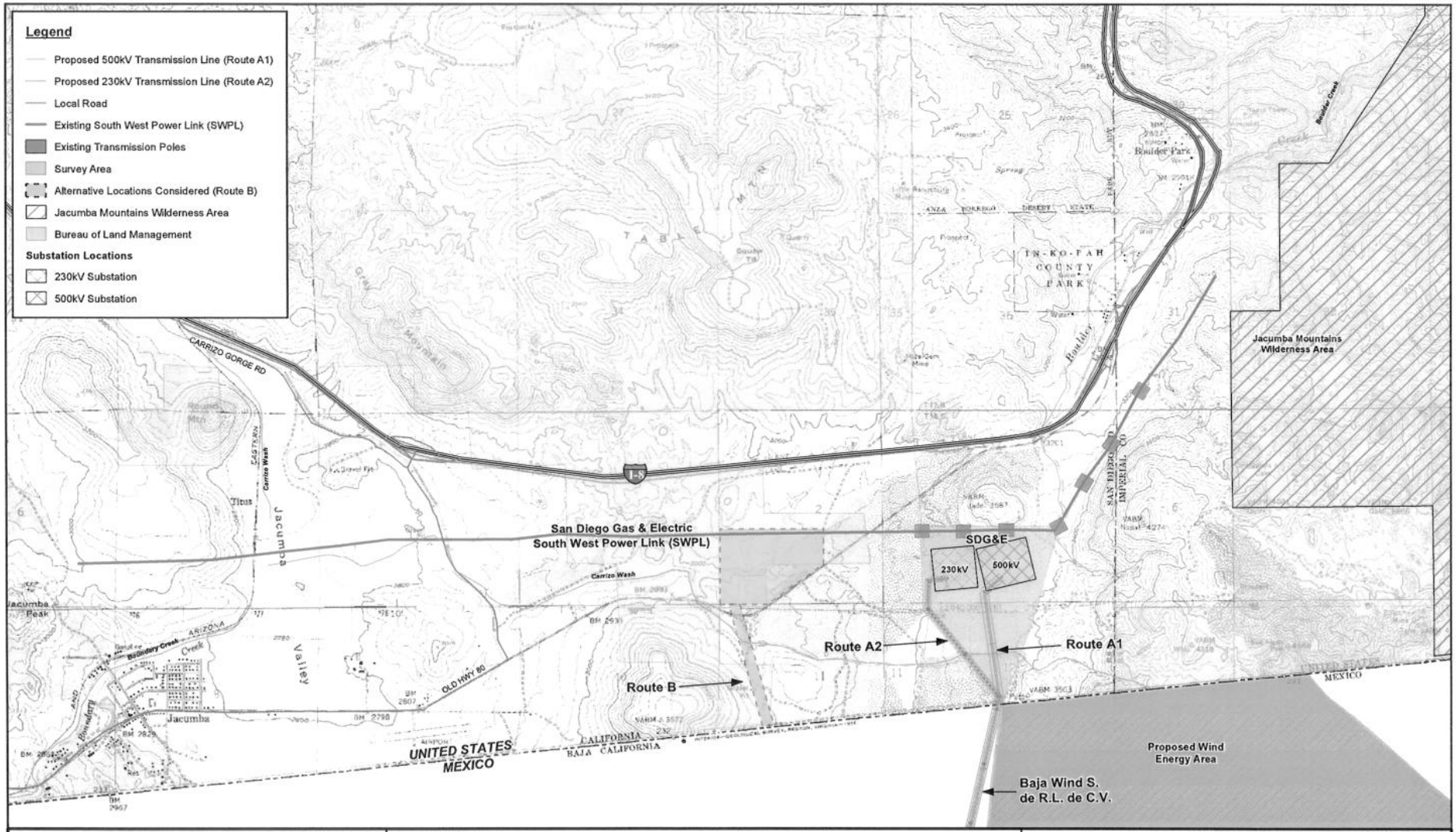

N S W E

0 0.25 0.5 1 1.5

Miles

Scale 1:30,000

Map Reference: USGS Topographic Map, Scale 1:24,000.

Baja Wind US Transmission LLC

SE San Diego County, California

Figure 2
DETAILED AREA MAP

Date:	GIS:	Job Number:
10/1/2007	avh	002510.SG08.01

\edms projects\rumorosa\detailed area.mxd

EXHIBIT D4

Typical 230-kV lattice tower

(see Table 1 for governing dimensions)

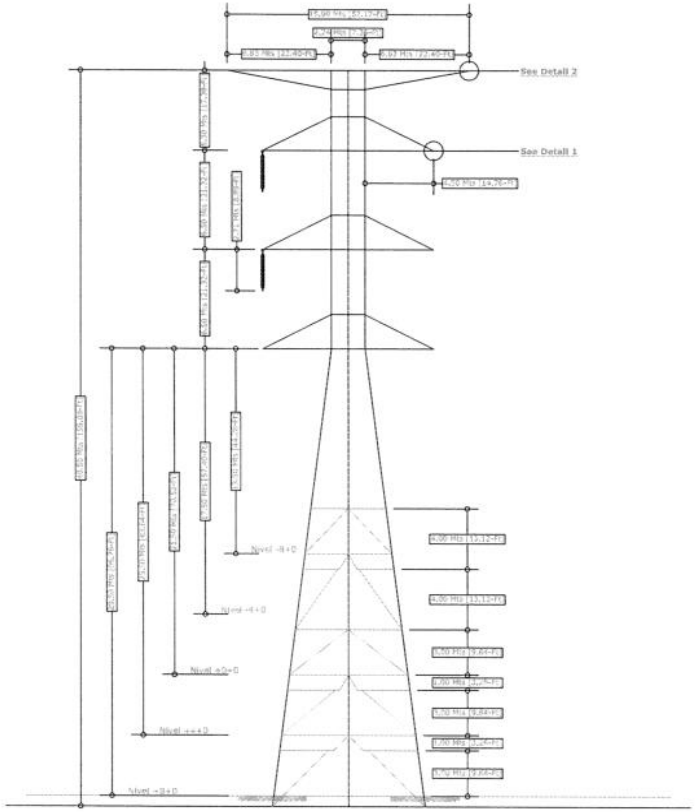

Front View
LATTICE TOWER TYPE 2R2
Esc: 1:150

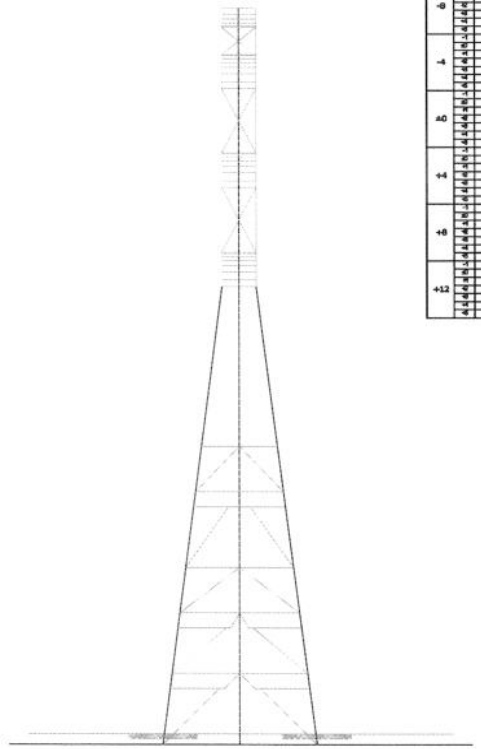

Side View
LATTICE TOWER TYPE 2R2
Esc: 1:150

Torre 2R2		DISTANCIA (Cms)						Peso en Negro (Kg) Galv. Normal x 1.035 Para Galv. X 1.0525			
		Entre puntos "A"			Entre Caras						
Nivel	Eje	A	1/2 A	B	E	C	D	Cuerpo Sup. Hoja/Cornamusa	Cuerpo Inf.	Cuerpo Sup. Hoja/Cornamusa	Tornillos Bolsa/Ajustes
-8	x1	600	415	688	-	-	-	-	-	430	-
	x2	688	432	816	-	-	-		1067		-
	x3	-	-	-	-	-	-		1035		-
	x4	-	-	-	-	-	-		-		-
	x5	-	-	-	-	-	-		-		-
-4	x1	611	408	697	-	-	-	8569	1067	430	1038
	x2	705	329	716	-	-	-		1035		1004
	x3	-	-	-	-	-	-		-		-
	x4	-	-	-	-	-	-		-		-
	x5	-	-	-	-	-	-		-		-
±0	x1	798	556	797	-	-	-	9621	1038	617	1067
	x2	798	574	916	-	-	-		1035		1035
	x3	-	-	-	-	-	-		-		-
	x4	-	-	-	-	-	-		-		-
	x5	-	-	-	-	-	-		-		-
+4	x1	904	627	897	-	-	-	11138	1038	617	1074
	x2	1098	644	916	-	-	-		1035		1010
	x3	-	-	-	-	-	-		-		-
	x4	-	-	-	-	-	-		-		-
	x5	-	-	-	-	-	-		-		-
+8	x1	1009	697	997	-	-	-	12724	1038	617	1074
	x2	1031	718	916	-	-	-		1035		1010
	x3	-	-	-	-	-	-		-		-
	x4	-	-	-	-	-	-		-		-
	x5	-	-	-	-	-	-		-		-
+12	x1	1097	765	1097	-	-	-	14400	1038	617	1038
	x2	1172	789	916	-	-	-		1035		1035
	x3	-	-	-	-	-	-		-		-
	x4	-	-	-	-	-	-		-		-
	x5	-	-	-	-	-	-		-		-

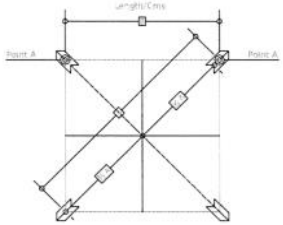

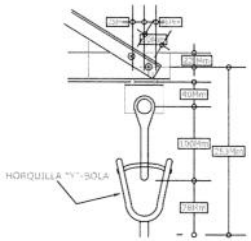

DETAIL 1
Esc: S / E

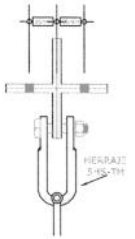

VIEW B-B
Esc: S / E

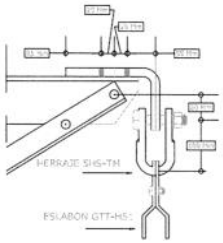

DETAIL 2
Esc: S / E

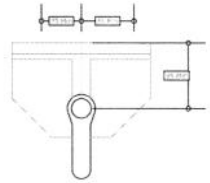

VIEW H-H
Esc: S / E

MACROLOCALIZACION

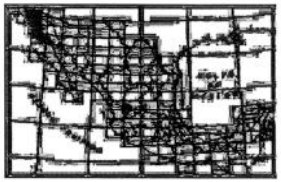

LOCATION

LEGEND

- LATICE TOWER 230 Kv
- STEEL POLE 230 Kv AR92
- TRANSMISSION LINE 230 Kv
- 2R2 DEAD END STRUCTURE
- 2B2 TANGENT STRUCTURE

CLIENT	SEMPRA ENERGY — Sempra Energy
DATE: FEB 2008 / SCALE: 1:200000	PROJECT: 230KV TRANSMISSION LINE DOUBLE CIRCUIT
DWN BY: Ing. Jerónimo Piveda	LOCATION: JACUME,BC MEX & JACUMA,CA USA
DWG: Arq. Abel Aguilar P.	DWG: LATTICE TOWER TYPE 2R2
PROJECT: CARGEADOS INDUSTRIALES S.A. DE C.V.	DWG NO.: LT-03 (03-10)

EXHIBIT D5

Typical 230-kV steel monopole

(see Table 1 for governing dimensions)

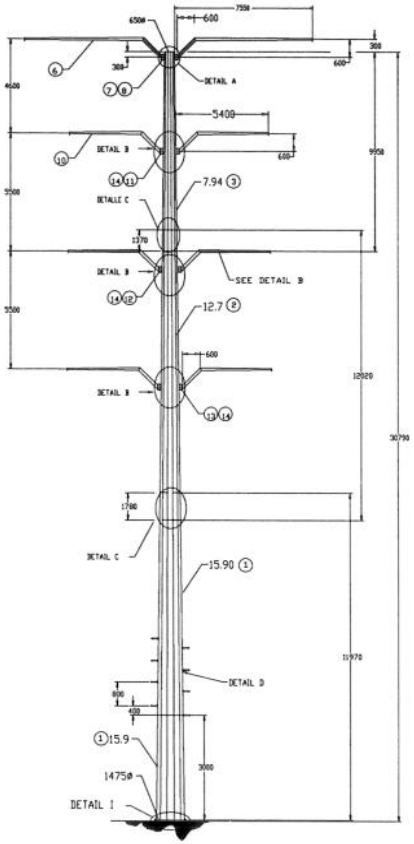

STEEL POLE 230KV SIDE VIEW

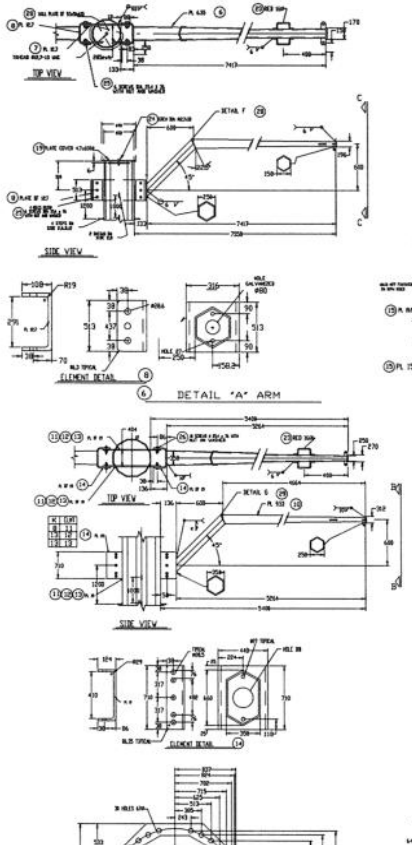

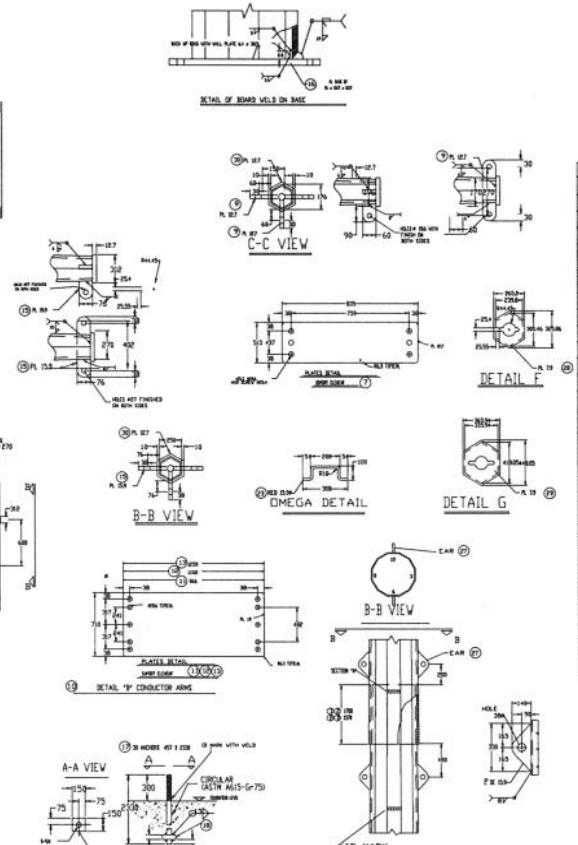

PARTS LIST AND WEIGHT								
MARK	NUMBER OF PIECES	DESCRIPTION	TOTAL LENGTH mm	TOTAL WIDTH mm	TOTAL HEIGHT mm	UNIT WEIGHT kg	TOTAL WEIGHT kg	SEE DETAIL
1	1	POLE FIRST SECTION (1.970 mm LENGHT)	[illegible]	[illegible]	[illegible]	[illegible]	[illegible]	[illegible]
2	1	POLE SECOND SECTION (2.005 mm LENGHT)	[illegible]	[illegible]	[illegible]	[illegible]	[illegible]	[illegible]
3	1	POLE THIRD SECTION (9.950 mm LENGHT)	[illegible]	[illegible]	[illegible]	[illegible]	[illegible]	[illegible]
4								
5	2	GROUND CABLE ARM 8 7mm Ø (MAX)	[illegible]	[illegible]	[illegible]	[illegible]	[illegible]	[illegible]
6	2	BRAM CABLE STRAIN (DIM. 127x127x12mm)	[illegible]	[illegible]		[illegible]	[illegible]	[illegible]
7	2	ELECTRIC PLATE FOR BRAM CABLE ON BRAM	[illegible]	[illegible]		[illegible]	[illegible]	[illegible]
8	2	S.S. SUPORT PLATES (2 MADE ONLY 1 ONE)	[illegible]			[illegible]	[illegible]	[illegible]
10	2	CONNECTOR CABLE ARM SUPORT DIM mm LENGHT	[illegible]	[illegible]	[illegible]	[illegible]	[illegible]	[illegible]
11	2	CONNECTOR CABLE ARM SUPORT DIM 1000 x 7mm	[illegible]			[illegible]	[illegible]	[illegible]
12	2	CONNECTOR CABLE ARM SUPORT DIM. 1000 x 7mm	[illegible]			[illegible]	[illegible]	[illegible]
13	2	CONNECTOR CABLE ARM SUPORT DIM. 2000 x 7mm	[illegible]			[illegible]	[illegible]	[illegible]
14	2	CONNECTOR CABLE CATCHER DIM. 1000 x 7mm	[illegible]			[illegible]	[illegible]	[illegible]
15	2	SUPORT PLATE FOR CLEANER DIM. 1000 x 7mm	[illegible]			[illegible]	[illegible]	[illegible]
16	1	ARM PLATE DIM 3x = 400 x 400	[illegible]			[illegible]	[illegible]	[illegible]
17	16	WASHER DIM 1 200 mm WITH 3 HOLES 14" DIAM	[illegible]			[illegible]	[illegible]	[illegible]
18	16	ARM REFORCEMENT PLATE	[illegible]			[illegible]	[illegible]	[illegible]
19	1	TOP COVER DIM. 1	[illegible]			[illegible]	[illegible]	[illegible]
20	1	PLATE DIM 1 x 3 x 120 FOR COVER SUPORT	[illegible]			[illegible]	[illegible]	[illegible]
21	16	STEEL STEP SUPORT SCREW TYPE	[illegible]				[illegible]	[illegible]
22	16	STEP SCREW TYPE DIM 700 x 16	[illegible]				[illegible]	[illegible]
23	20	SNOW ARM FOR SAFETY BELT	[illegible]				[illegible]	[illegible]
24	1	ROUND BARS 1 x 127 x 750 DIM 1000	[illegible]			[illegible]	[illegible]	[illegible]
25	12	TRIPLE ROUND DIM 25 x 2 DIM 127 mm LENGHT	[illegible]			[illegible]	[illegible]	[illegible]
26	12	ROUND BARS DIM 25 x 2 DIM 127 mm LENGHT	[illegible]			[illegible]	[illegible]	[illegible]
27	2	ARM CAPS DIM 140 x 150 x 150	[illegible]			[illegible]	[illegible]	[illegible]
28	2	PLATE DIM 10 x 1 MOUNTED IN ARM	[illegible]			[illegible]	[illegible]	[illegible]
29	1	PLATE DIM 10 x 1 MOUNTED IN ARM	[illegible]			[illegible]	[illegible]	[illegible]
30	2	ROUNDALL 10 DIAM 10 MM 1 2 DIAM 10 MM 1 2	[illegible]			[illegible]	[illegible]	[illegible]
31	2	ROUNDALL 10 DIAM 10 MM 1 2 DIAM 10 MM 1 2	[illegible]			[illegible]	[illegible]	[illegible]
						TOTAL WEIGHT kg		

NOTES:
1.- THIS POLE INCLUDES ARMS, ANCHORS AND SCREWS ARE GALVANIZED ACCRDING TO NORM
2.- ON POLE, ARMSN AND ARMS TOLERANCES WILL BE ACCRDING TO NORM CFE-J6100-54
3.- WELD TYPE WILL BE ACCRDING TO NORM ASCE70-50 AND A.W.S. RECOMMENDATIONS
4.- WASHER SECTION JOINS WHET POLE WILL BE WELDED ON BOTH SIDES ON 100%
5.- DIMENSIONS ARE IN MILIMETERS, WITH ISO SCALE
6.- JOIN SECTIONS WITH 2 HYDRAULIC PISTONS DIESPAC BDP-306 OR SIMILAR, USING WITH ANY PISTON 50 KN. FOR ANY 1.6mm OF WALL THICKNESS
7.- THE ID PLATE MUST INCLUDES POLE KIND, STEEL USED, ELEMENT MARK, SERIAL NUMBER, CONSTRUCTION YEAR AND MANUFACTURER'S NAME.
8.- MAX. WIND VELOCITY 160 Km/h.

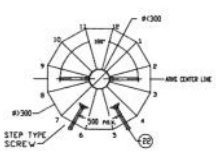

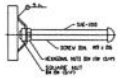

DETAIL "D" STEP

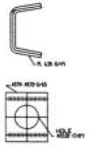

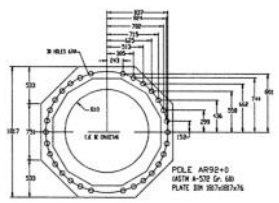

BASE PLATE AND ANCHORS DISTRIBUTION

NOTES:
[illegible]

MACROLOCATION

LOCATION

LEGEND

CLIENT: SEMPRA ENERGY — Sempra Energy

DATE: FEB 2008	SCALE: 1:200000	PROJECT: 230KV TRANSMISSION LINE DOUBLE CIRCUIT
DWG BY: Ing. Jeronimo Pineda		LOCATION: JACUME,BC MEX & JACUMA,CA USA
DWG: Arq. Abel Aguilar P.		DWG: STEEL POLE AR92
PROJECT: [illegible]		Dwg No: LT-05 (05-07)

EXHIBIT E

System power flow plots (revised)

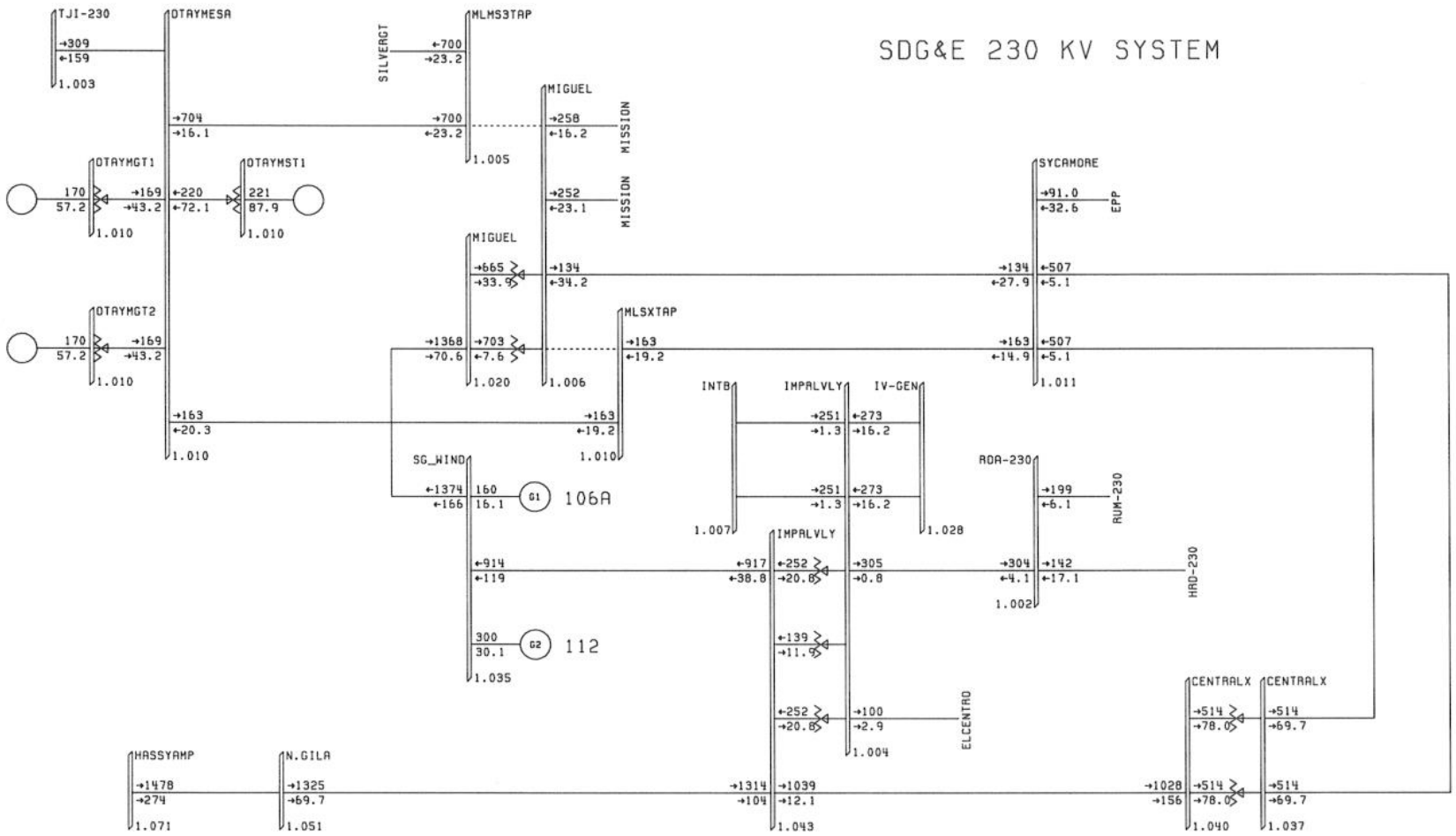

500 KV SYSTEM

POWER TECHNOLOGIES INC.	2010 BASE CASE, NO PVD2, Q106A=160, Q112=300 - 10HSWNDA0 SEMPRA WIND NOT INSTALLED BASE MODEL W/O RUMOROSA WIND SAT, MAR 15 2008 11:19	BUS - VOLTAGE (PU) BRANCH - MW/MVAR EQUIPMENT - MW/MVAR

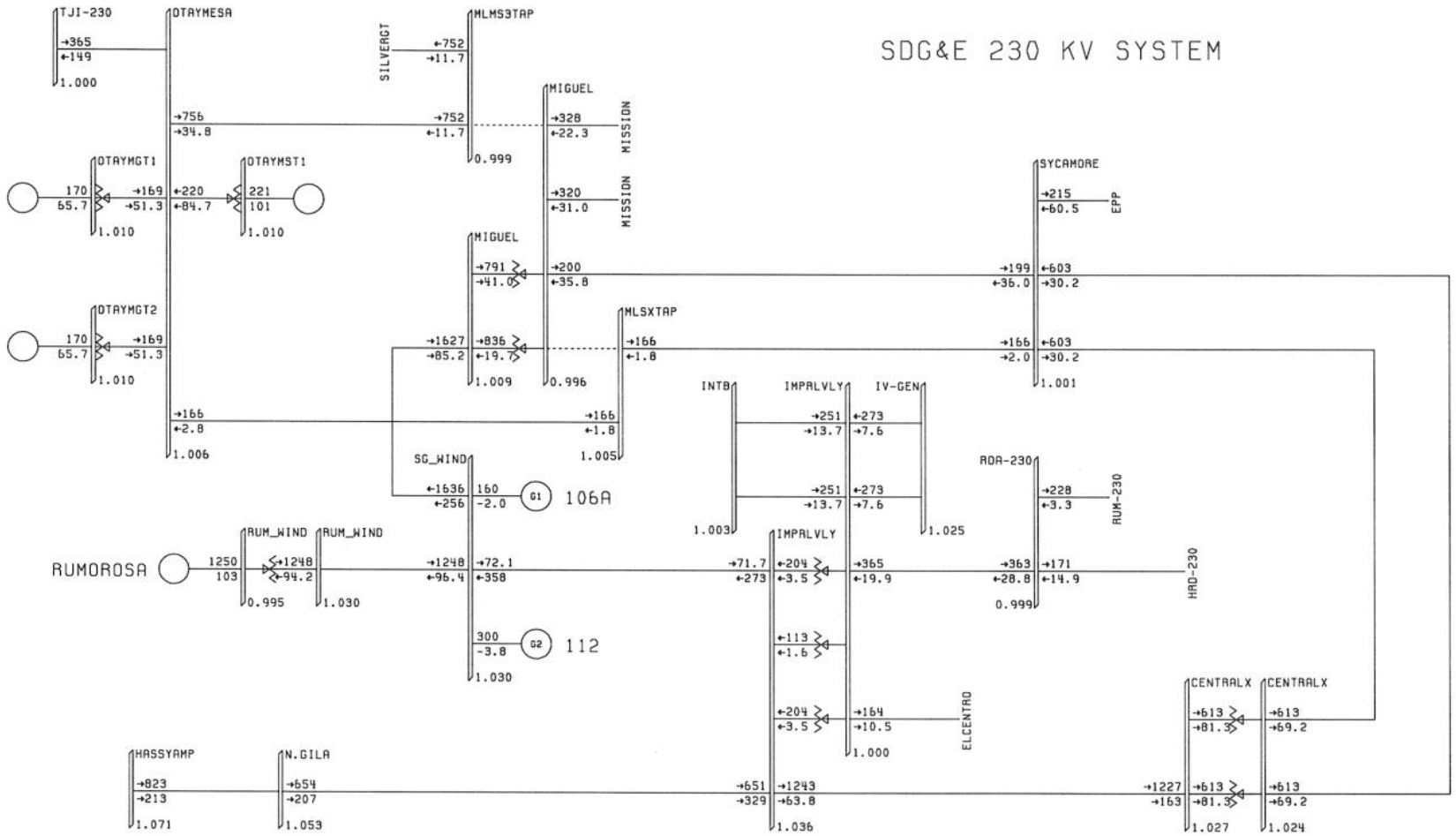

2010 BASE CASE, NO PVD2, Q106A=160, Q112=300 - 10HSWNDA1
SEMPRA WIND AT 1250 MW
BASE MODEL WITH RUNOROSA WIND SAT, MAR 15 2008 11:22

POWER TECHNOLOGIES INC.

BUS - VOLTAGE (PU)
BRANCH - MW/MVAR
EQUIPMENT - MW/MVAR